Genie®
A TEREX BRAND

Parts Manual

Serial Number Range

S-60 XC
from S60XCH-48334

S-65 XC
from S65XCH-48304

Part No. 1314701GT
Rev: B.01
September 2024

Technical Publications

Genie has endeavored to deliver the highest degree of accuracy possible. However, continuous improvement of our products is a Genie policy. Therefore, product specifications are subject to change without notice.

Readers are encouraged to notify Genie of errors and send in suggestions for improvement. All communications will be carefully considered for future printings of this and all other manuals.

Contact Us:

Internet: www.genielift.com
e-mail: awp.techpub@terex.com

Find a Manual for this Model

Go to http://www.genielift.com

Use the links to locate Operator's, Parts, Maintenance, and Service and Repair Manuals.

Copyright © 2022 Terex Corporation

1314701GT Rev B.01 September 2024
Eleventh Edition, Second Printing

Genie and "S" are registered trademarks of Terex South Dakota, Inc. in the USA and many other countries.
"XC" is a trademark of Terex South Dakota, Inc.

Printed on recycled paper

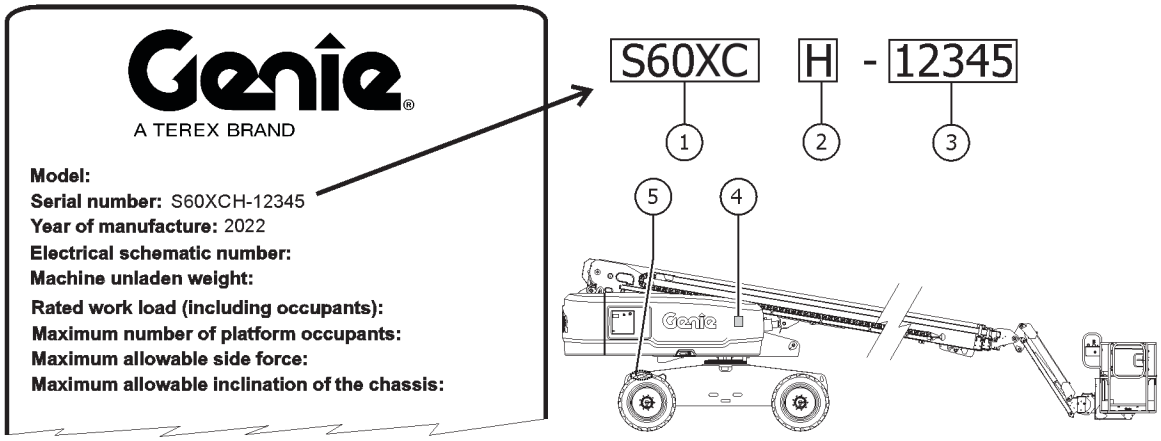

1 Model
2 Facility code
3 Sequence number
4 Serial label (located under cover)
5 Serial number (stamped on chassis)

How to Order Parts

Please be prepared with the following information when ordering replacement parts for your Terex or Genie product.

- ☒ **Machine model number**
- ☒ **Machine serial number**
- ☒ **Part number**
- ☒ **Part description and quantity**
- ☒ **Purchase order number**
- ☒ **"Ship to" address**
- ☒ **Desired method of shipment**
- ☒ **Name and telephone number of the authorized distributor in your area**

Use the Service Parts Fax Order Form on the next page and fax your order to our Parts Department.

If you don't know the name of your authorized distributor, or if your area is not currently serviced by an authorized distributor, please call Terex or Genie Industries.

Machine Information

_____

Model

_____

Serial Number

_____

Date of Purchase

_____

Authorized Genie Distributor

_____

Phone Number

North America

Telephone (425)881-1800

Toll Free (800)536-1800 in US and Canada

Fax (425)556-8659

Toll Free fax (888)274-6192

Email AWP.PartsSalesPO@terex.com

http://genielift.com/en

EMEAR (Europe, Middle East, Africa and Russia)

Telephone (31)(165)519 313

Fax (31)(165)511 148

http://genielift.co.uk

Asia Pacific (Genie Singapore)

Telephone +65 6692 7777

Fax +65 6261 8893

http://genielift.com.sg/

Australia

Telephone (61)(7)3456 4444

Fax (61)(7)3456 4466

http://genielift.com.au

South America

Telephone (55)(11)4082 5600

Fax (55)(11)4082 5630

Please refer to section 001 for the Recommended Spare Parts List.

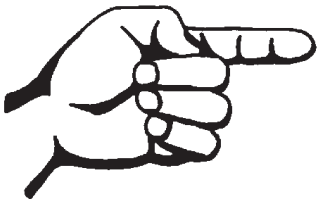

This page intentionally left blank.

TEREX CORPORATION

Service Parts Fax Order Form

Fax to: (425) 556-8659 or Toll Free: 888-274-6192
International: +1-425-556-8659

Please fill out completely

Date _____ Account Number _____

Your Name _____ Your Fax Number _____

_____ Your Phone Number _____

Bill To _____ Ship To _____

_____ _____

_____ _____

_____ _____

Purchase Order Number _____ Ship Via _____

Model(s) _____ **Serial No.(s)** _____

Optional Equipment _____

Part Number	Description	Quantity	Price

All back-ordered parts will be shipped when available via the same ship method as the original order unless Noted below:

- ☐ Ship complete order only - No back orders
- ☐ Ship all available parts and contact customer on disposition of back-ordered parts
- ☐ Other (please specify)

Description — Page

001 Parts Stocking List 12

001.1 Parts Stocking List 12

100 Decals 18

101.1 Decals with Words, Hydraulic Tank Side 18
102.1 Decals with Words, Chassis 22
103.1 Decals with Words, Engine Side 26
104.1 Decals with Words, Boom 28
105.1 Decals with Words, Platform 30
106.1 Decals with Symbols, Hydraulic Tank Side 34
107.1 Decals with Symbols, Chassis 38
108.1 Decals with Symbols, Engine Side 42
109.1 Decals with Symbols, Boom 44
110.1 Decals with Symbols, Platform 48

200 Drive Chassis Components 50

201.1 Steer End 50
202.1 Non-steer End 58
203.1 Oscillate Valve 64
204.1 TraX Option Steer End (to SN S65XCH-50392) 66
205.1 TraX Option Non-steer End (to SN S65XCH-50392) 68
206.1 TraX Option Components (to SN S65XCH-50392) 70
207.1 TraX Option NGT Steer End (from SN S65XCH-50393) 74
208.1 TraX Option NGT Non Steer End (from SN S65XCH-50393) 76
209.1 TraX Option NGT Components (from SN S65XCH-50393) 78

300 Turntable Components 80

301.1 Tank Side - View 1 80
302.1 Tank Side - View 2 86
303.1 Tank Side - Diesel Fuel Tank Installation 92
304.1 Tank Side - Gasoline Fuel Tank Installation 94
305.1 Ground Control Box - External 98
306.1 Ground Control Box - Internal 100
307.1 Turntable Components and Swivel Drive Assembly 104
308.1 Turntable Covers - Hydraulic Tank Side 110
309.1_Turntable Covers - Engine Side 114
310.1 Wire Harness Diagram 118
310.101 Cable Boom S65XC 124
310.101B Cable Boom S60XC 126
310.102A Harness, Gbox, ALC600, Telematics 128
310.102B HARNESS GBOX, ALC600, TELEMATIC 2, HW 132

Description	Page
310.103 HARNESS S60/65XC DEUTZ 2.9	134
310.103B HARNESS S60/65XC ENGINE DEUTZ TD 2011	138
310.103C HARNESS, ENGINE, FORD MSG425 T4, S60/65XC	142
310.103D HARNESS, ENGINE, PERKINS 404D	144
310.103E HARNESS, ENGINE, PERKINS CRDI	148
310.104 HARNESS, FUNCTION MANIFOLD	152
310.105 HARNESS BOOM SENSORS GBOX SD	154
310.106 HARNESS, PBOX, ALC600, XC, EPL	156
310.106B HARNESS, SWITCH, PROX, PCON	160
310.107 HARNESS, PLATFORM, MANIFOLD, ALC600, EPL	162
310.108 ASSEMBLY,FOOTSWITCH	164
310.109 HARNESS, LIGHTS, WORK	166
310.109B ASSY,WORK LIGHT,LED 12V,45W	168
310.110 ANGLE SENSOR,360DEG,CAN	170
310.111 HARNESS, LST10, S60/65XC	172
310.112 HARNESS, LST3S, S60/65XC	174
310.113 HARNESS, LSB1RS, S80/85	176
310.114 HARNESS, LSB2S, S80/85	178
310.115 HARNESS, LIGHTS, DRIVE	180
310.115B ASSY,DRIVE LIGHT,12V LED	182
310.116 HARNESS,BEACONS,FLASHING	184
310.118 HARNESS, BOOM SENSORS,BOOM SD	186
310.119 CABLE ASSY, BLACK 2/0	188
310.120 HARNESS, EXT CABLE, CAN SENSOR, 18/4C	190
310.121 LOAD CELL, J1939, 650KG/1433LB	192
310.122 LENGTH TRANSDUCER, 400 IN, CAN ID 47	194
310.123 MODULE, VEC, ALC600	196
310.124 SENSOR,LEVEL,UNIVERSAL	198
310.125 CABLE ASSY, RED 2/0	200
310.126 HARNESS, PROX, MANIFOLD, PLAT	202
310.127 ASSEMBLY,SENSOR, PROX,CONTACT ALARM	204
310.128 ASSY, LIGHTS, 12/24 V CONTACT ALARM, AMBER	206
310.129 BATTERY CABLE,POSITIVE,RED	208
310.130 CABLE, BATTERY, NEG, S60/65	210
310.131 HARNESS,BATT2 TO APU(-),S80	212
310.132 HARNESS,BATT2 TO APU(+)	214
310.134 HARNESS,AC POWER TO PLAT JIB	216
310.136 CABLE, RED 2/0, 20"	218
310.137 HARNESS,OIL COOLER,LIFTPOWER	220
310.138 HARNESS,GND BATT 1 TO BATT 2	222
310.139 HARNESS, BOOM SENSORS,LINK	224
310.140 HARNESS,16 GA SEPERATOR TO GRD	226

Description	Page
310.141 HARNESS,8GA BATT 2 TO SEPARATR	228
310.142 HARNESS,APU+ TO BATT 2	230
310.143 HARNESS, PASS OPTION STG-V	232
310.144 ASSY,WORK LIGHT,LED 12V,45W	234
400 Manifolds and Pumps	**238**
401.1 Function Manifold	238
402.1 Traction Manifold	244
403.1 Pumps	248
404.1 Platform Rotate Manifold/ Platform Manifold S-65 XC	250
404.2 Platform Rotate Manifold/ Platform Manifold S-60 XC	254
405.1 Generator Manifold	256
500 Engine Components	**258**
501.1 Deutz D2011L03i, View 1	258
502.1 Deutz D2011L03i, View 2	262
503.1 Ford MSG-425 EFI, View 1	266
504.1 Ford MSG-425 EFI, View 2	270
505.1 Ford MSG-425 EFI, View 3	274
506.1 Ford MSG-425 EFI, View 4	280
507.1 Deutz TD2011L04i, View 1	286
508.1 Deutz TD2011L04i, View 2	290
509.1 Deutz TD2011L04i, View 3	292
510.1 Deutz TD2011L04i, View 4	294
511.1 Deutz D2.9L4, View 1	296
512.1 Deutz D2.9L4, View 2	300
513.1 Deutz D2.9L4, View 3	304
514.1 Deutz D2.9L4, View 4	308
515.1 Deutz D2.9L4, View 5	312
516.1 Deutz 2.9L Turbo, View 1	316
517.1 Deutz 2.9L Turbo, View 2	320
518.1 Deutz 2.9L Turbo, View 3	324
519.1 Deutz 2.9L Turbo, View 4	326
520.1 Deutz 2.9L Turbo, View 5	328
521.1 Perkins 404D-22, View 1	332
522.1 Perkins 404D-22, View 2	336
523.1 Perkins 404D-22, View 3	340
524.1 Perkins 404D-22, View 4	342
525.1 Perkins 404F-22, View 1	344
526.1 Perkins 404F-22, View 2	348
527.1 Perkins 404F-22, View 3	352
528.1 Engine Tray	356

Description — Page

600 Boom Structure Components 360

601.1 Linkage Assembly - View 1 360
602.1 Linkage Assembly - View 2 364
603.1 Boom Components - View 1 366
604.1 Boom Components - View 2 372
605.1 Boom Components - View 3 376
606.1 Boom End Components, S-65XC 380
607.1 Boom End Components, S-60XC 388
608.1 Boom End Components, Load Sense 392
609.1 Cable Track 394

700 Platform Components 398

701.1 Platform Configuration 398
702.1 Platform Installation 400
703.1 Platform Control Box 404
704.1 Joysticks 410

800 Hydraulic Hose Routing and Fittings 412

801.1 Boom, S-60 XC 412
802.1 Boom, S-65 XC 414
803.1 Turntable Components 416
804.1 4WD Drive and Steer System 422
805.1 Oscillate System 426

900 Accessories 428

901.1 Drive Lights, Alarm and Beacon Packages 428
902.1 Platform Accessories 430
903.1 Half Mesh with Side Entry 432
904.1 Panel Cradle and Pipe Cradle 434
905.1 Platform Work Lights 436
906.1 Aircraft Protection, Standard Entry 438
907.1 Aircraft Protection, Swing Gate 442
908.1 Airline and Power to Platform 446
909.1 Hostile Environment, Boom Wipers 448
910.1 Hostile Environment, Turntable Components 450
911.1 Hostile Environment, Cylinder Bellows and Cable Track 452
912.1 Hostile Environment, Ground and Platform Box Covers 454
913.1 Engine Air Pre-Cleaners 456
914.1 Welder Option, Chassis Components 458
915.1 Welder Option, Platform Components 462
916.1 3K Hydraulic Generator Option 466

Description	Page
917.1 Generator Option - Hoses and Fittings	468
918.1 Oil Cooler Components	470
919.1 2nd LP Tank Carrier	472
920.1 Tow Package	474
921.1 Fall Arrest Bar	476
922.1 Lift Guard Contact Alarm Option	478
923.1 Positive Air Shutoff	480
924.1 Remote Charging	484
925.1 Telematics Option	486
926.1 Cold Start Package	488
927.1 Lift Tools Expo Installer	492
928.1 2nd Battery Option	494
929.1 Lift Tools Access Deck - 8 Feet	496
930.1 Lift Tools Access Deck - 6 Feet	500
931.1 Lift power welder ready (from SN S60XCH-48880, SN S65XCH-48880)	504
932.1 Quickfit Oil Change System Ready	506
933.1 Access Manager Option	508
Part Number Index	**510**

001.1 Parts Stocking List

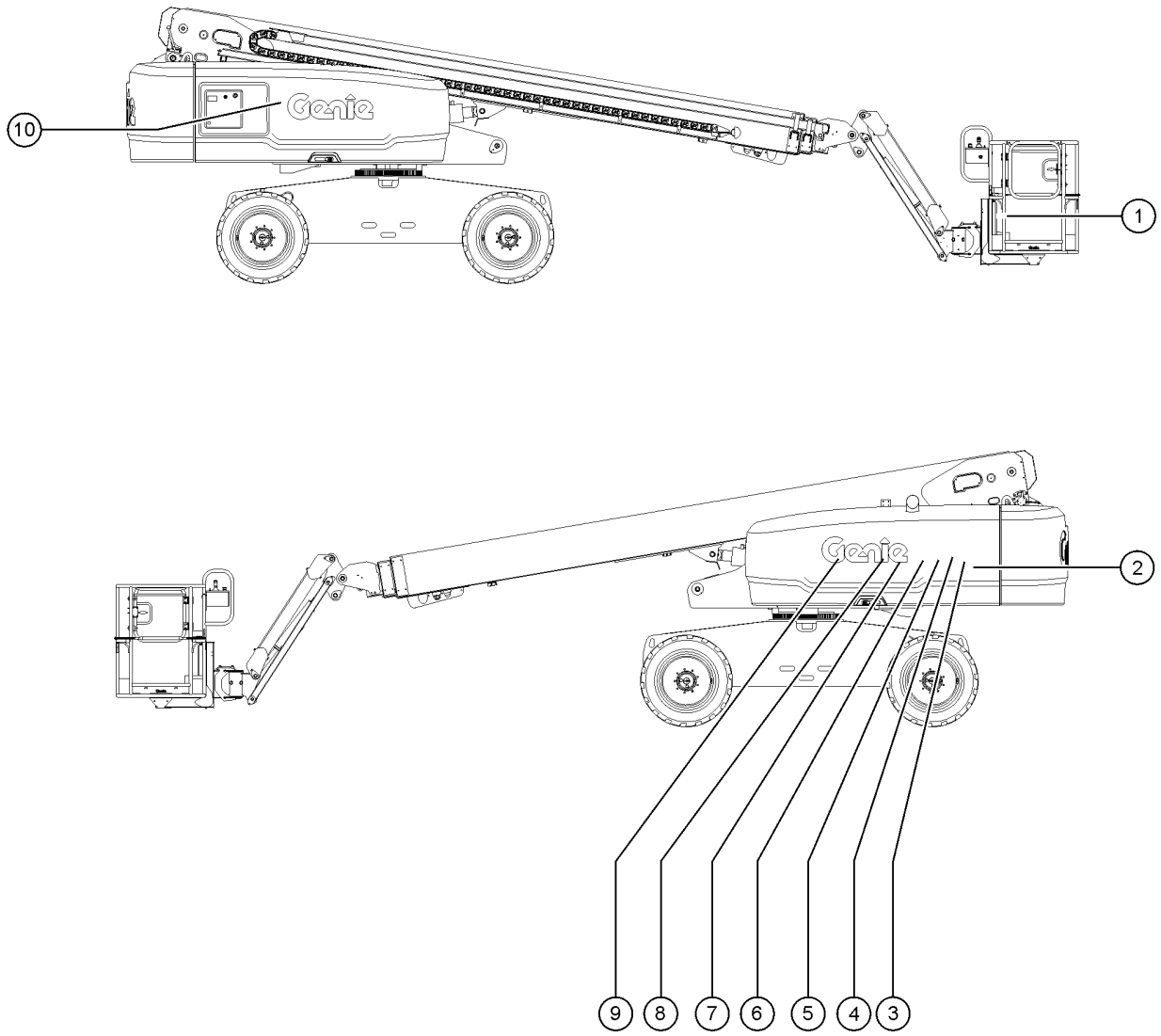

Item	Part No.	Description	Qty.
A		—Inspection Service Kits—	
A-	1278708GT	KIT,ENGINE SERVICE,250 HOUR,DEUTZ D2.9,,Z45/S40/S60/Z62/RT90 models with Deutz D2.9L4 engine	
A-	1278709GT	KIT,ENGINE SERVICE,250 HOUR,FDMSG425,Z45/S40/S60/Z62/RT90 models with Ford MSG425 engine	
B		—General Service Parts—	
B-	1484GT	PAINT, AEROSOL, BRIGHT BLUE*** 12-ounce spray paint	
B-	1268GT	PAINT, AEROSOL, GENIE GRAY*** 12-ounce spray paint	
B-	1258567GT	PAINT, AEROSOL, TRAFFIC BLACK 12-ounce spray paint	
B-	32150GT	PAINT, WET, GENIE BLUE (1 GL)** 1-gallon	
B-	32151GT	PAINT, WET, GENIE GRAY (1GL)** 1-gallon	
B-	1257733GT	PAINT, WET, TRAFFIC BLACK(1 GL)** 1-gallon	
B-	66399GT	GREASE, DIELECTRIC 4 OZ**	
B-	1283776GT	SEAL MARKER,CROSS CHECK,BLUE,TUBE	
B-	93500GT	PARKER DIGITAL PRESSURE GAUGE	
B-	49612GT	O-RING KIT (ORFS FITTINGS) O-ring kit, Parker	
B-	28750GT	O-RING KIT,FIELD SVC,ALL PROD* O-ring kit, SAE	
B-	33994GT	PLUG AND CAP KIT-SERVICE,37?** Plug and cap kit, SAE	
1		—Manuals—	
1-	27581GT	MANUAL, SAFTY MANNAL	
1-	1298933GT	MANUAL, SAIA MANUAL OF RESPONSIBILITIES, MEWP	
		—HYD Filters—	
2	60857GT	FILTER,ELEMENT,BETA(5)=1000 (refer to figure 309.1)	
3		—Perkins 404D-22 Models—	
3-	62420GT	FILTER,AIR*** Perkins 404D-22 Models (refer to 521.1)	
3-	62433GT	FILTER,ELEMENT,30 MIC,75020 Perkins 404D-22 Models (refer to 521.1)	

001.1 Parts Stocking List

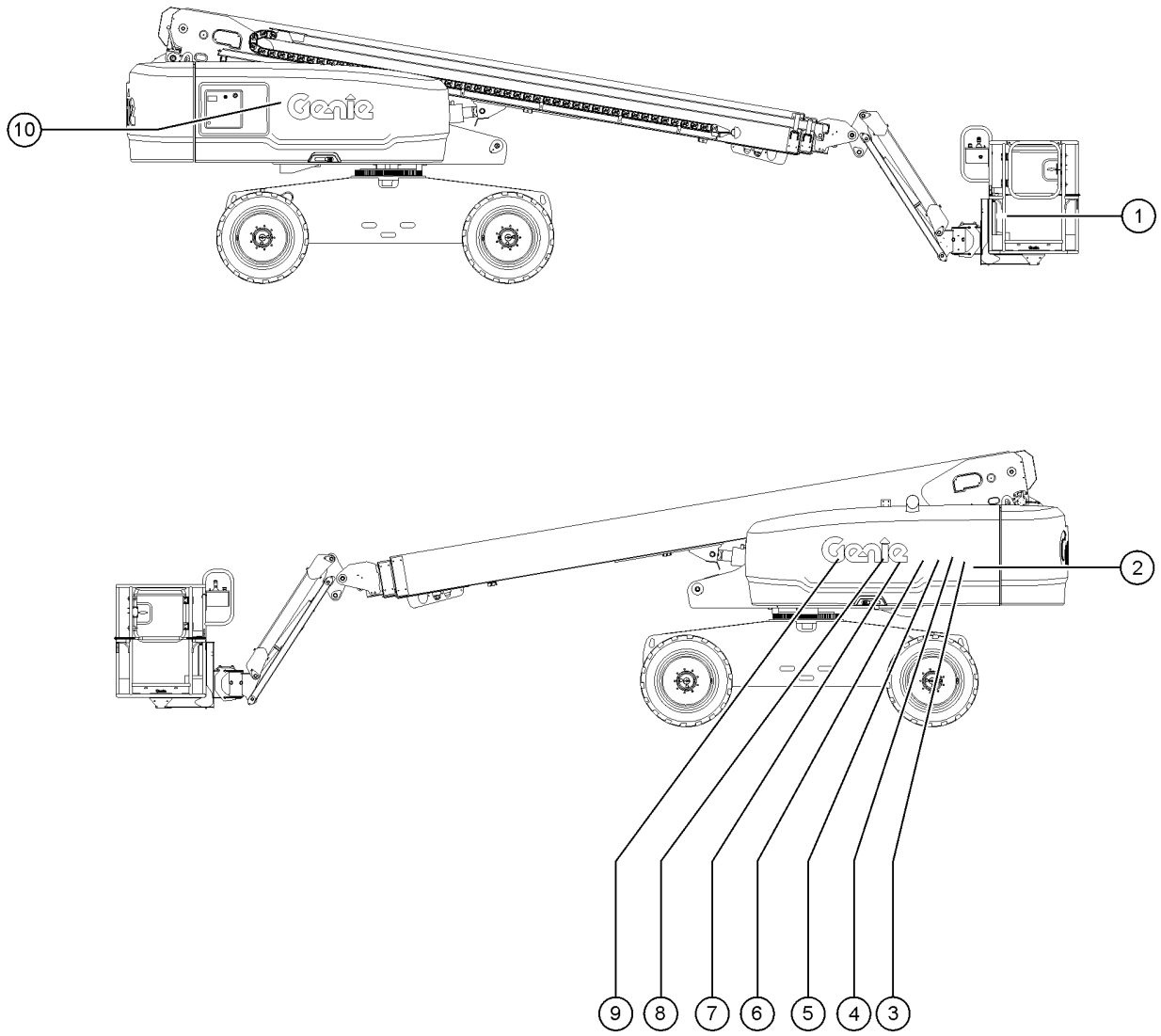

Item	Part No.	Description	Qty.
3-	94762GT	OIL FILTER - PERKINS Perkins 404D-22 Models (refer to 521.1)	
3-	89765GT	BELT, V (PERKINS 404) Perkins 404D-22 Models (refer to 521.1)	
3-	62421GT	FILTER,FUEL,PERKINS Perkins 404D-22 Models (refer to 521.1)	
4		—Perkins 404F-22 Models—	
4-	62420GT	FILTER,AIR*** Perkins 404F-22 Models (refer to 525.1)	
4-	62433GT	FILTER,ELEMENT,30 MIC,75020 Perkins 404F-22 Models (refer to 527.1)	
4-	94762GT	OIL FILTER - PERKINS Perkins 404F-22 Models (refer to 525.1)	
4-	89765GT	BELT, V (PERKINS 404) Perkins 404F-22 Models (refer to 525.1)	
4-	1262487GT	BELT,AIR PUMP,PERKINS 404F-22T Perkins 404F-22 Models (refer to 525.1)	
6-	88917GT	FILTER,ELEMENT,BETA(10)=200 (refer to figure 301.1)	
6-	1282117GT	FILTER,ELEMENT,HYD TANK,RETURN (refer to figure 301.1)	
5		—Deutz TD2011-L03i Models—	
5-	62420GT	FILTER,AIR*** Deutz TD2011-L03i Models (refer to 501.1)	
5-	29560GT	FILTER,FUEL/WTR SEP, DTZ 1008 Deutz TD2011-L03i Models (refer to 501.1)	
5-	49924GT	FILTER,OIL,DEUTZ F4L1011F Deutz TD2011-L03i Models (refer to 501.1)	
5-	32698GT	BELT Deutz TD2011-L03i Models (refer to 501.1)	
6		—Deutz TD2011-L04i Models—	
6-	62425GT	FILTER,AIR CLEANER, SUPERBOOM Deutz TD2011-L04i Models (refer to 507.1)	
6-	29560GT	FILTER,FUEL/WTR SEP, DTZ 1008 Deutz TD2011-L04i Models (refer to 507.1)	
6-	49924GT	FILTER,OIL,DEUTZ F4L1011F Deutz TD2011-L04i Models (refer to 507.1)	
6-	58630GT	V-BELT, DEUTZ TD2011LOAI Deutz TD2011-L04i Models (refer to 507.1)	
7		—Deutz D2.9L4 Models—	
7-	62420GT	FILTER,AIR*** Deutz D2.9L4 Models (refer to 511.1)	
7-	214228GT	FILTER, DEUTZ 2.9, FUEL Deutz D2.9L4 Models (refer to 511.1)	
7-	236260GT	PRE-FILTER,FUEL,DEUTZ TCD3.6 Deutz D2.9L4 Models (refer to 511.1)	

001.1 Parts Stocking List

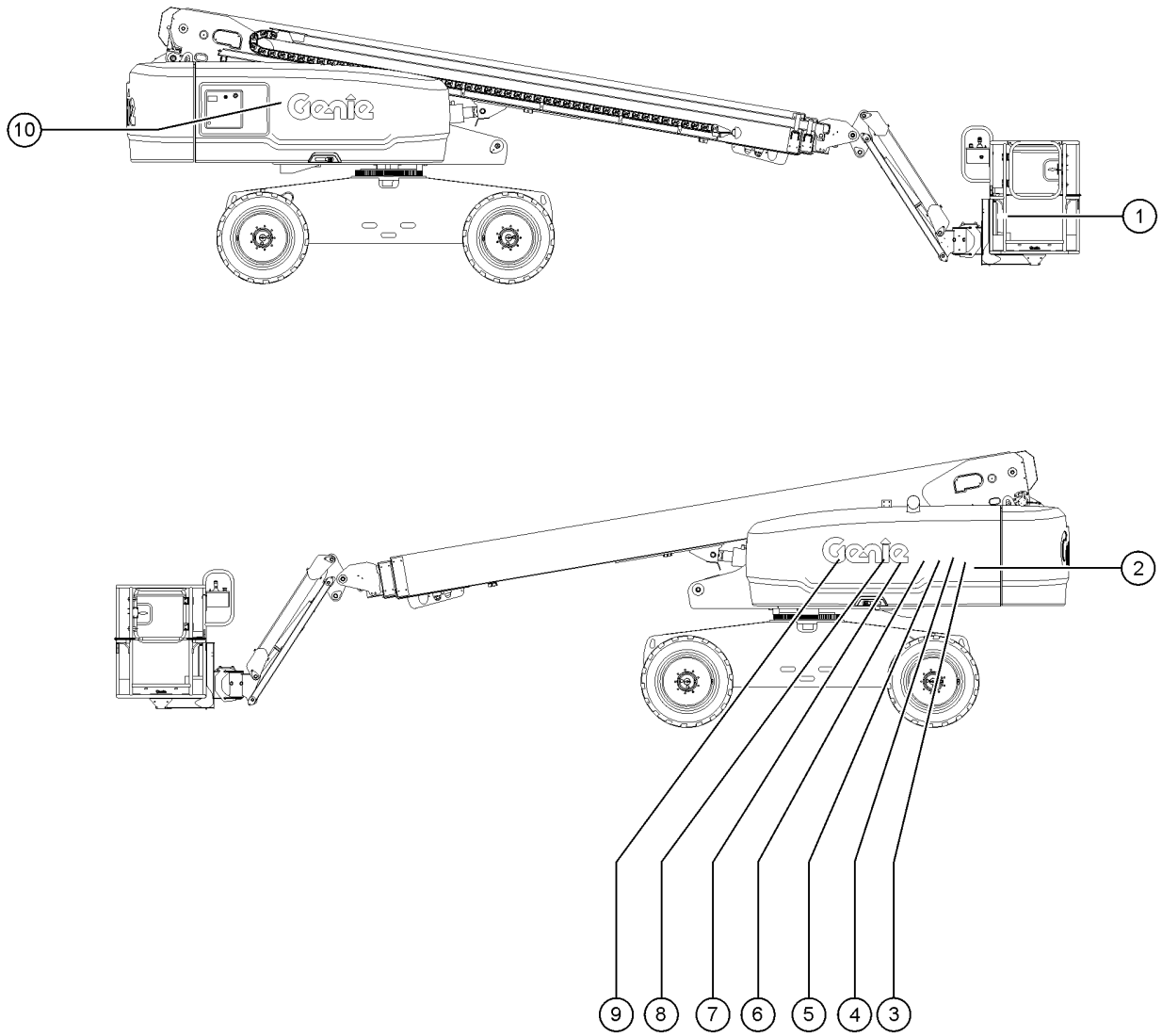

Item	Part No.	Description	Qty.
7-	49924GT	FILTER,OIL,DEUTZ F4L1011F Deutz D2.9L4 Models (refer to 511.1)	
7-	1262866GT	FAN BELT, ALTERNATOR Deutz D2.9L4 Models (refer to 511.1)	
7-	1262487GT	BELT,AIR PUMP,PERKINS 404F-22T Deutz D2.9L4 Models (refer to 511.1)	
8		—Deutz D2.9L4 Turbo Models—	
8-	62425GT	FILTER,AIR CLEANER, SUPERBOOM Deutz D2.9L4 Turbo Models (refer to 516.1)	
8-	49924GT	FILTER,OIL,DEUTZ F4L1011F Deutz D2.9L4 Turbo Models (refer to 516.1)	
8-	214228GT	FILTER, DEUTZ 2.9, FUEL Deutz D2.9L4 Turbo Models (refer to 516.1)	
8-	236259GT	LIFT PUMP,FUEL,DEUTZ TCD3.6 Deutz D2.9L4 Turbo Models (refer to 516.1)	
8-	236260GT	PRE-FILTER,FUEL,DEUTZ TCD3.6 Deutz D2.9L4 Turbo Models (refer to 516.1)	
8-	1262866GT	FAN BELT, ALTERNATOR Deutz D2.9L4 Turbo Models (refer to 516.1)	
8-	1262867GT	V-BELT, DEUTZ Deutz D2.9L4 Turbo Models (refer to 516.1)	
9		—Ford DSG-425 EFI Models—	
9-	1271652GT	FILTER, FUEL, GM3.0L Ford DSG-425 EFI Models (refer to 503.1)	
9-	119139GT	OIL FILTER,DSG-423 Ford DSG-425 EFI Models (refer to 503.1)	
9-	77295GT	FILTER ELEMENT,AIR,NOLFF LPG Ford DSG-425 EFI Models (refer to 503.1)	
9-	215274GT	FAN DRIVE BELT, MSG425 Ford DSG-425 EFI Models (refer to 503.1)	
9-	119474GT	VALVE,PCV FORD DSG-423 Ford DSG-425 EFI Models (refer to 503.1)	
9-	215287GT	SPARK PLUG, MSG425 Ford DSG-425 EFI Models (refer to 503.1)	
		—HYD Filters—	
10	88917GT	FILTER,ELEMENT,BETA(10)=200 (refer to figure 301.1)	
10-	1282117GT	FILTER,ELEMENT,HYD TANK,RETURN (refer to figure 301.1)	

101.1 Decals with Words, Hydraulic Tank Side

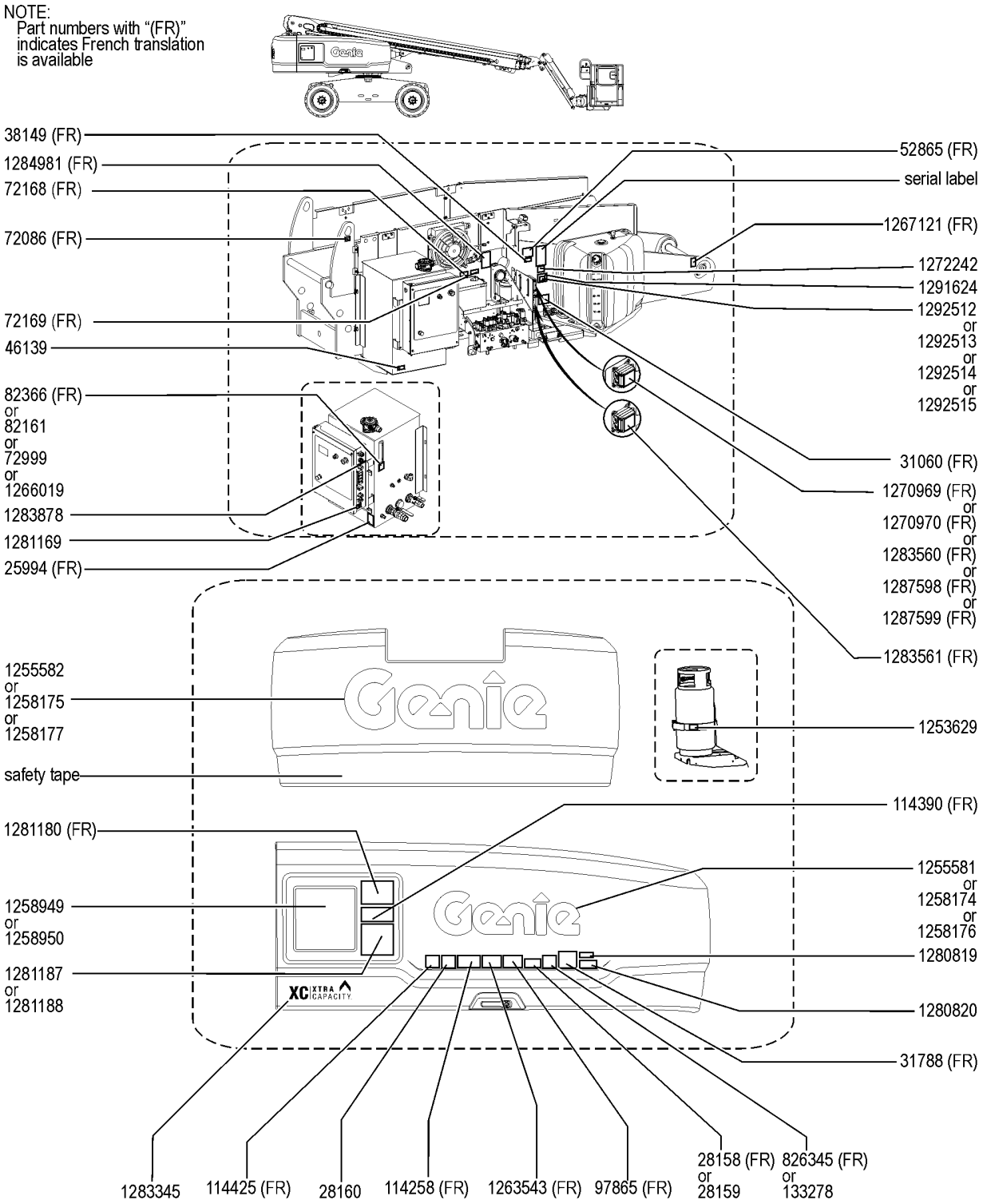

101.1 Decals with Words, Hydraulic Tank Side

Item	Part No.	Description	Qty.
1	25994GT	DECAL,NOTICE,SHUTOFF VALVES	1
2	28158GT	DECAL,LABEL,UNLEADED GAS ONLY Option, fuel	1
3	28159GT	DECAL,DIESEL Option, fuel	1
4	28160GT	DECAL,LABEL,LIQUID PROPANE Option, LPG Tank	1
5	31060GT	DECAL,DANGER DO NOT ALTER SWTC	1
6	31788GT	DECAL,DANGER,BATTERY SAFETY***	1
7	38149GT	DECAL,LABEL,PATENTS US Only	1
8	46139GT	L,NAMEPLT,USE UNDERWRITE LAB Option, LP Tank	1
9	52865GT	DECAL,ANNUAL INSP***	1
10	72086GT	DECAL,LABEL,LIFTING EYE	1
11	72168GT	DECAL,LABEL,STARTER BATTERY	1
12	72169GT	DECAL,LABEL,CONTROLS BATTERY	1
13	72999GT	DECAL,LABEL,PETRO CANADA*** Option, hydraulic oil	1
14	82161GT	DECAL,LABEL,UCON HYDROLUBE Option, hydraulic oil	1
15	82366GT	DECAL,CHEVRON RANDO HD Option, hydraulic oil	1
16	97865GT	DECAL,WARN,ELECTRO HAZARD	1
17	114258GT	DECAL,DANGER,NO SMOKING	1
18	114390GT	DECAL,DANGER,ELECT HAZARD***	1
19	114425GT	DECAL,BATTERY DISCONNECT Option, LPS	1
20	133278GT	DECAL,LOW/ULTRA LOW SULFR FUEL diesel models only	1
21	826345GT	DECAL,ULS DIESEL ONLY,TIER 4 Tier 4	1
22	1253629GT	DECAL,LP BOTTLE,S60 Option, LP bottle	1
23	1255581GT	DECAL COSMETIC,10" GENIE BLUE	1
24	1255582GT	DECAL COSMETIC,15" GENIE BLUE	1
25	1258174GT	DECAL COSMETIC,10" GENIE WHITE	1
26	1258175GT	DECAL COSMETIC,15" GENIE WHITE	1
27	1258176GT	DECAL COSMETIC,10" GENIE BLACK	1
28	1258177GT	DECAL COSMETIC,15" GENIE BLACK	1

101.1 Decals with Words, Hydraulic Tank Side

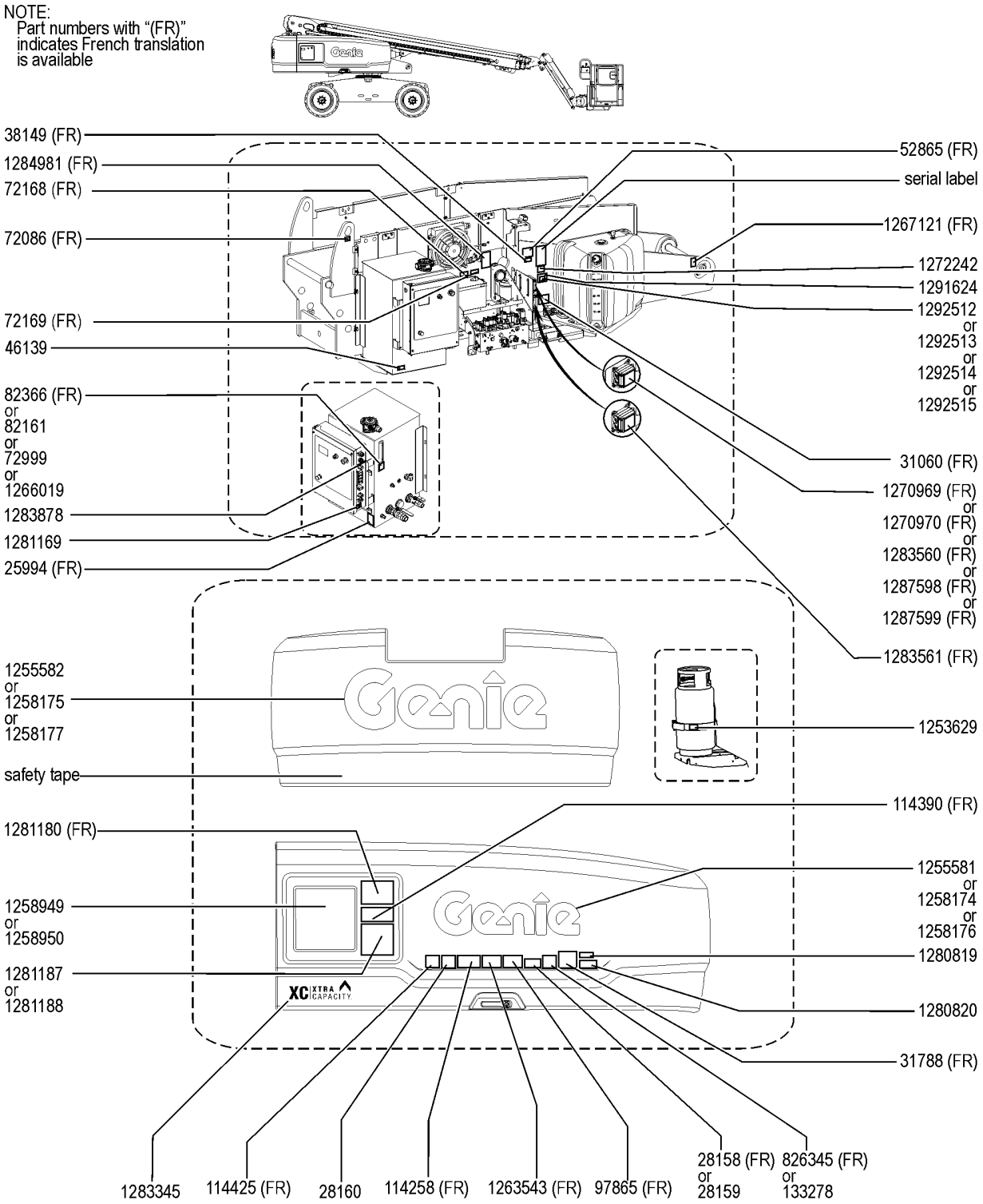

Item	Part No.	Description	Qty.
29	1258949GT	OVERLAY GROUND CONTROLS S-BOOM JIB S-65 XC, S-65 TRAX	1
30	1258950GT	OVERLAY GROUND CONTROLS S-BOOM S-60 XC, S-60 TRAX	1
31	1263543GT	DECAL,COMPARTMENT ACCESS	1
32	1266019GT	DECAL, LABEL, SHELL TELLUS Option, hydraulic oil	1
33	1267121GT	DECAL,WARNING,CRUSH HAZARD	1
34	1270969GT	DECAL, VEC, DEUTZ2.9T, S80 Deutz 2.9	1
35	1270970GT	DECAL, VEC, DEUTZ2011T, S80 Deutz 2011	1
36	1272242GT	DECAL,MACHINE REGISTRATION/OWN	1
37	1280819GT	DECAL,WARNING,CANCER AND REPRODUCTIVE HARM, PROP 65 US only	1
38	1280820GT	DECAL,FUEL,DIESEL EXHAUST, PROP 65 US only	1
39	1281169GT	DECAL,RECOVERY SWITCH	1
40	1281180GT	DECAL,OPERATING INSTRUCTIONS	1
41	1281187GT	DECAL,EMERGENCY LOWERING,S-80 XC S-60 XC, S-60 TRAX	1
42	1281188GT	DECAL,EMERGENCY LOWERING S-65 XC, S-65 TRAX	1
43	1283345GT	DECAL, COVER, XC XTRA CAPACITY	1
44	1283560GT	DECAL, VEC 1, PERKINS 404F-E22TI, S60/65XC Perkins 404F-E22T	1
45	1283561GT	DECAL, VEC 2, PERKINS 404F-E22TI, S60/65XC Perkins 404F-E22T	1
46	1283878GT	DECAL, TECHPRO LINK	1
47	1284981GT	DECAL,ACCUMULATOR EXPLOSION HAZARD,WORD	1
48	1287598GT	DECAL, VEC, PERKINS404D, S60/65XC Perkins 404D-22	1
49	1287599GT	DECAL, VEC, FORD MSG425, S60/65XC Ford MSG-425	1
50	1291624GT	DECAL COSM,GENIE LIFT CONNECT,LEXAN COVER	1
51	1292512GT	DECAL COSM,GENIE LIFT CONNECT,ESN,SKU4-1	1
52	1292513GT	DECAL COSM,GENIE LIFT CONNECT,ESN,SKU4-2	1
53	1292514GT	DECAL COSM,GENIE LIFT CONNECT,ESN,SKU4-3	1
54	1292515GT	DECAL COSM,GENIE LIFT CONNECT,ESN,SKU4-4	1
55	1312388GT	DECAL, 13FT (4M) PLATFRM, MAX ALLOWBLE CHASSIS INCLIN, WORD (from SN S60XCH - 49600),(from SN S65XCH - 49600)	1

102.1 Decals with Words, Chassis

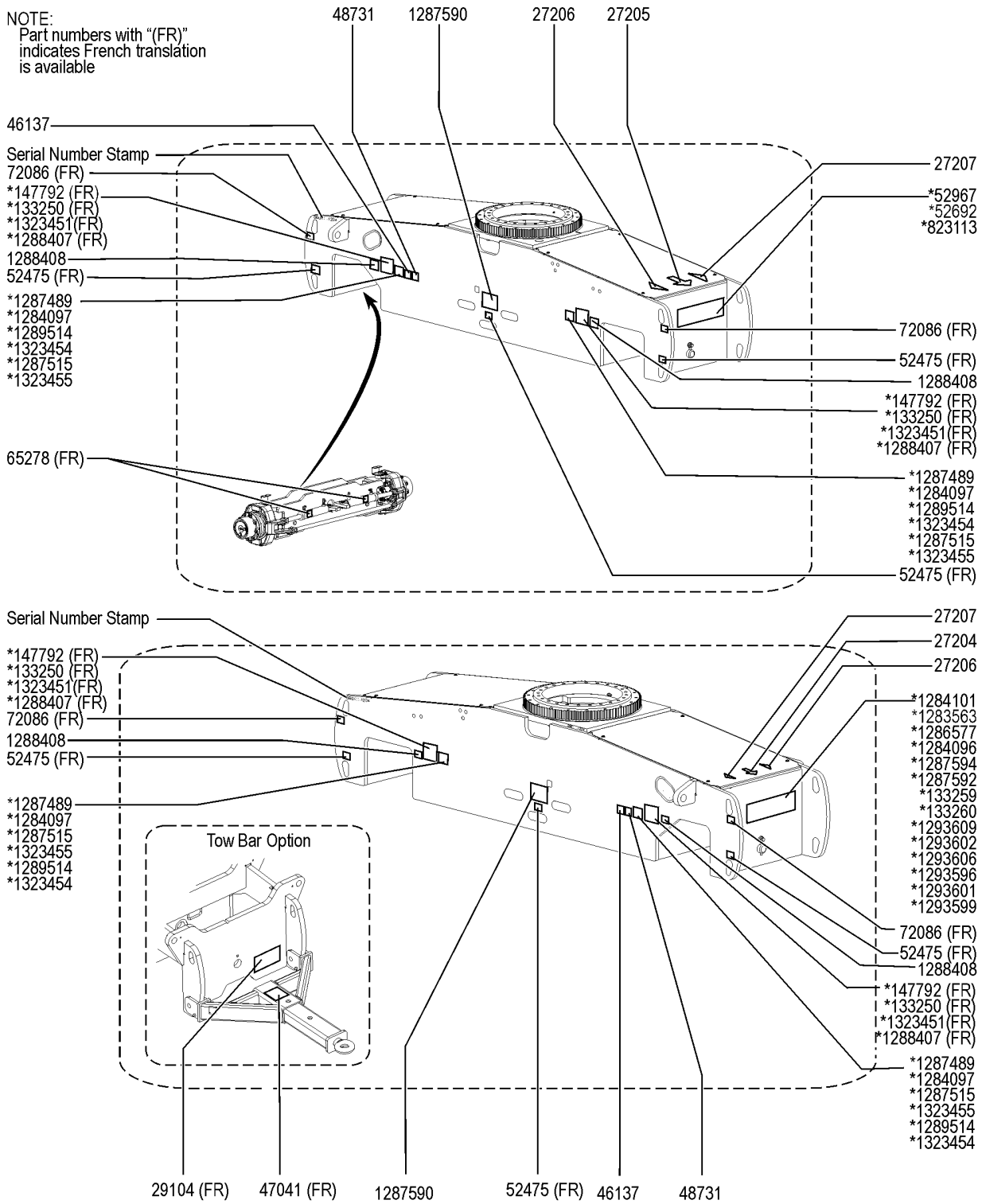

Item	Part No.	Description	Qty.
0		*These decals are model, option or configuration specific.	
1	27204GT	DECAL,ARROW BLUE	1
2	27205GT	DECAL,ARROW YELLOW LRG 9"	1
3	27206GT	DECAL,TRIANGLE,BLUE	2
4	27207GT	DECAL,TRIANGLE,YELLOW	2
5	29104GT	DECAL,TOWING INSTRUCTIONS Option, tow	1
6	46137GT	DECAL,LPS (4"X4")	2
7	47041GT	DECAL,CAUTION,TOWING SPEED Option, tow	1
8	48731GT	DECAL,LABEL,FMRC APPROVED (to SN S60XCH-50150),(to SN S65XCH-50150)	2
9	52475GT	DECAL,LABEL,TRANSPORT TIEDOWN*	6
10	52692GT	DECAL,COSMETIC,4X4 BLUE	1
11	52967GT	DECAL,COSMETIC,4 X 4	1
12	65278GT	DECAL,CAUTION,NO STEP	2
13	72086GT	DECAL,LABEL,LIFTING EYE	6
14	133250GT	DECAL,DANGER TIP OVER TRAX (to SN S65XCH-50392) S-60 TRAX, S-65 TRAX	4
14B	1323451GT	DECAL,DANGER TIP OVER TRAX (from SN S65XCH-50393) S-60 TRAX, S-65 TRAX	4
15	133259GT	DECAL,COSM, S60 TRAX S-60 TRAX	1
16	133260GT	DECAL,COSM, S65 TRAX S-65 TRAX	1
17	147792GT	DANGER,TIPOVR,TIRES FF ONLY S-60 XC, S-65 XC	4
18	823113GT	DECAL,COSM,4X4,BLACK	1
19	1283563GT	DECAL, CHASSIS, S-60 XC, BLUE	1
20	1284096GT	DECAL, CHASSIS, S-65 XC	1
21	1284097GT	DECAL,LABEL,WHEEL LOAD S65 XC	4
22	1284101GT	DECAL, CHASSIS, S-60 XC	1
23	1286577GT	DECAL, CHASSIS, S-60 XC, BLK	1
24	1287489GT	DECAL,LABEL,WHEEL LOAD S60 XC	4
25	1287515GT	DECAL, WHEEL LOAD S65 TRAX (to SN S65XCH-50392)	4
25B	1323455GT	DECAL, WHEEL LOAD S65XC TRAX (from SN S65XCH-50393)	4

102.1 Decals with Words, Chassis

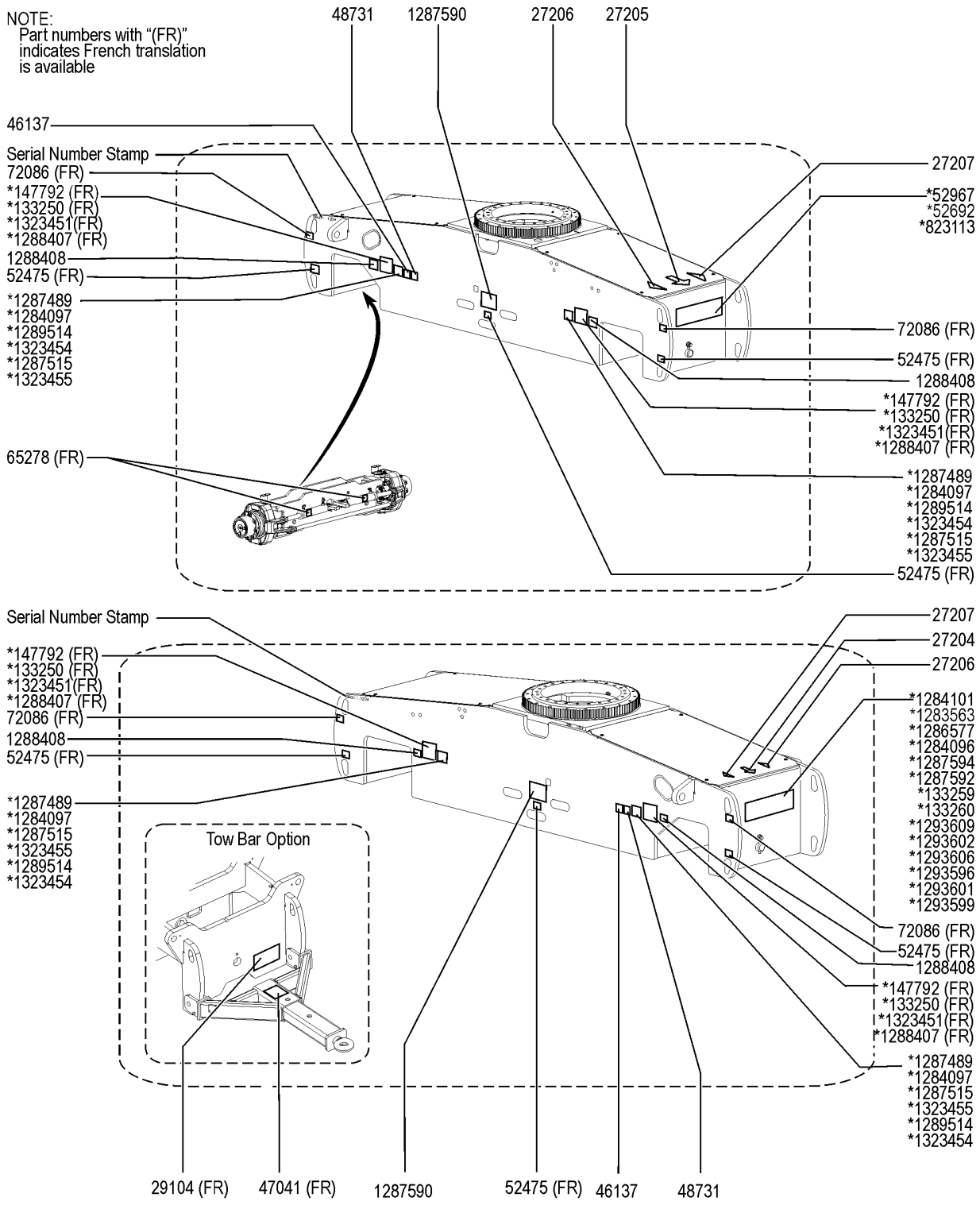

Item	Part No.	Description	Qty.
26	1287590GT	DECAL, TRANSPORT/LIFTING, S-60/65XC	2
27	1287592GT	DECAL, CHASSIS, S-65 XC, BLK	1
28	1287594GT	DECAL, CHASSIS, S-65 XC, BLUE	1
29	1289514GT	DECAL, WHEEL LOAD S60XC TRAX (to SN S65XCH-50392)	4
29B	1323454GT	DECAL, WHEEL LOAD S60XC TRAX (from SN S65XCH-50393)	4
30	1293596GT	DECAL, CHASSIS, S-65 HF	1
31	1293599GT	DECAL, CHASSIS, S-65 HF, BLK	1
32	1293601GT	DECAL, CHASSIS, S-65 HF, BLUE	1
33	1293602GT	DECAL, CHASSIS, S-60 HF, BLUE	1
34	1293606GT	DECAL, CHASSIS, S-60 HF, BLK	1
35	1293609GT	DECAL, CHASSIS, S-60 HF	2
36	1288407GT	DECAL,DANGER,HI-FLOAT TIRE	4
37	1288408GT	DECAL,TIRE SEALANT,3.25 X 7.5	4
38	1312376GT	DECAL, WARNING, CRUSHING HAZARD, WORD (from SN S60XCH - 49600),(from SN S65XCH - 49600)	1
39	1312379GT	DECAL, LOCK TRANSPORT, S65XC (from SN S60XCH - 49600),(from SN S65XCH - 49600)	1
40	1299668GT	DECAL, TRANSPORT, APPROVED OCTL (from SN S60XCH - 49600),(from SN S65XCH - 49600)	1
41	1258955GT	DECAL, ETL CLASSIFIED LISTED from SN S60XCH - 50150),(from SN S65XCH - 50150)	2

103.1 Decals with Words, Engine Side

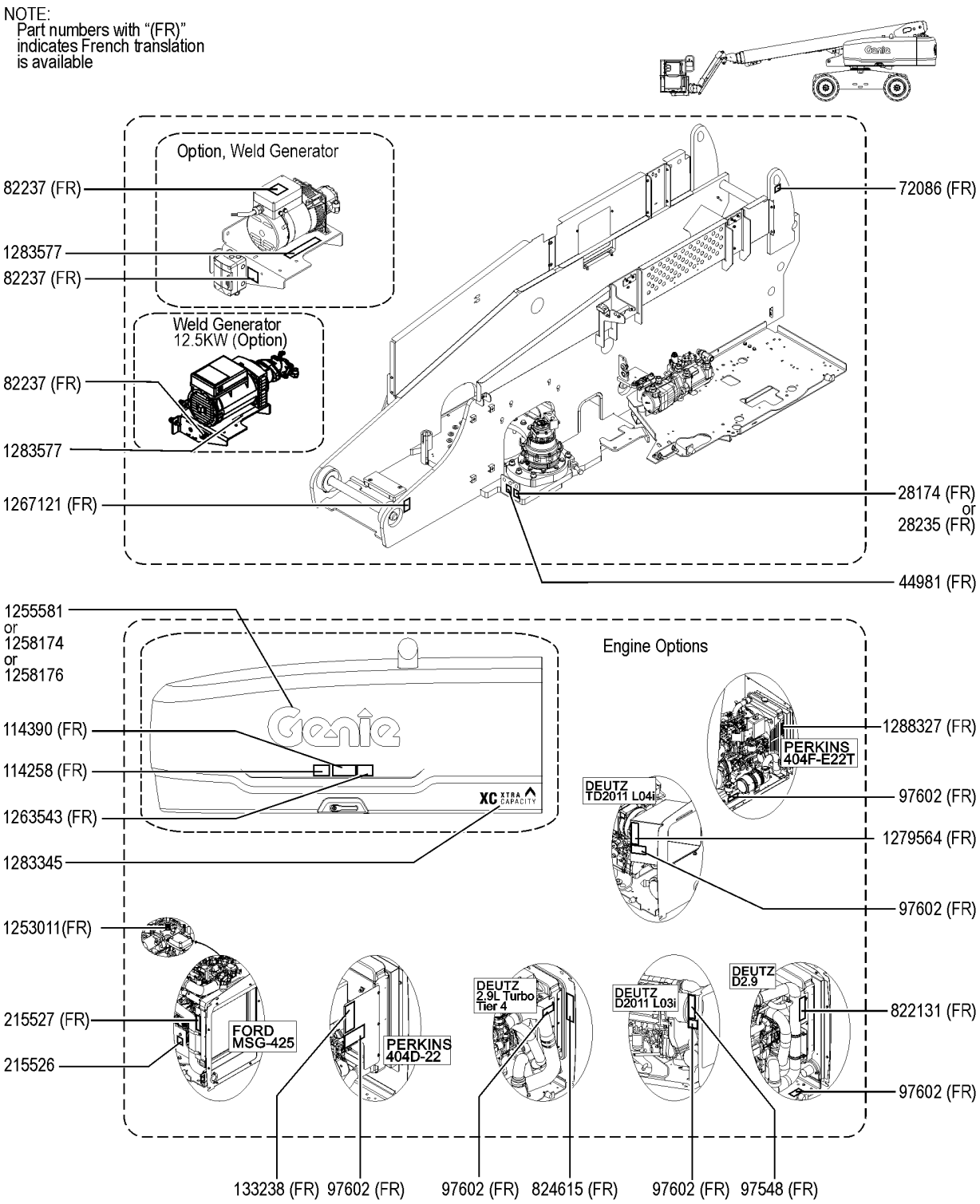

Item	Part No.	Description	Qty.
1	28174GT	DECAL,POWER TO PLATFORM 230V	
2	28235GT	DECAL,POWER TO PLATFORM 115V	
3	44981GT	DECAL,LABEL,AIRLINE 110 PSI Option, airline to plat	
4	72086GT	DECAL,LABEL,LIFTING EYE	
5	82237GT	DECAL,DANGER,HIGH VOLTAGE Option, Weld Generator	
6	97548GT	DECAL,ENGINE SPEC,DEUTZ 2011 Deutz D2011L03i	
7	97602GT	DECAL,EXPLOSION HAZARD	
8	114258GT	DECAL,DANGER,NO SMOKING	
9	114390GT	DECAL,DANGER,ELECT HAZARD***	
10	133238GT	DECAL,ENGINE SPEC,PERKINS*** Perkins 404D-22	
11	215526GT	DECAL,LABEL,BELT,MSG425 Ford MSG-425	
12	215527GT	DECAL,FORD ENGINE SPEC MSG425 Ford MSG-425	
13	822131GT	DECAL, ENGINE SPEC, D2.9 Deutz D2.9	
14	824615GT	DECAL,ENGINE SPEC,DEUTZ TD2.9 Deutz 2.9L turbo	
15	1253011GT	DECAL, VAPORIZER PRESSURE Option, LP	
16	1255581GT	DECAL COSMETIC,10" GENIE BLUE	
17	1258174GT	DECAL COSMETIC,10" GENIE WHITE	
18	1258176GT	DECAL COSMETIC,10" GENIE BLACK	
19	1263543GT	DECAL,COMPARTMENT ACCESS	
20	1267121GT	DECAL,WARNING,CRUSH HAZARD	
21	1279564GT	DECAL,ENGINE SPEC,DEUTZ,TD2011 Deutz TD2011L04i	
22	1283345GT	DECAL, COVER, XC XTRA CAPACITY	
23	1283577GT	DECAL, LIFT^POWER, 1X7 INCH Option, welder	
24	1288327GT	DECAL,ENGINE SPEC,404F-E22T Perkins 404F-E22T	
25	1294398GT	DECAL, ANSI/CSA COMPLIANT (from SN S60XCH - 49600),(from SN S65XCH - 49600)	1

104.1 Decals with Words, Boom

NOTE:
Part numbers with "(FR)" indicates French translation is available

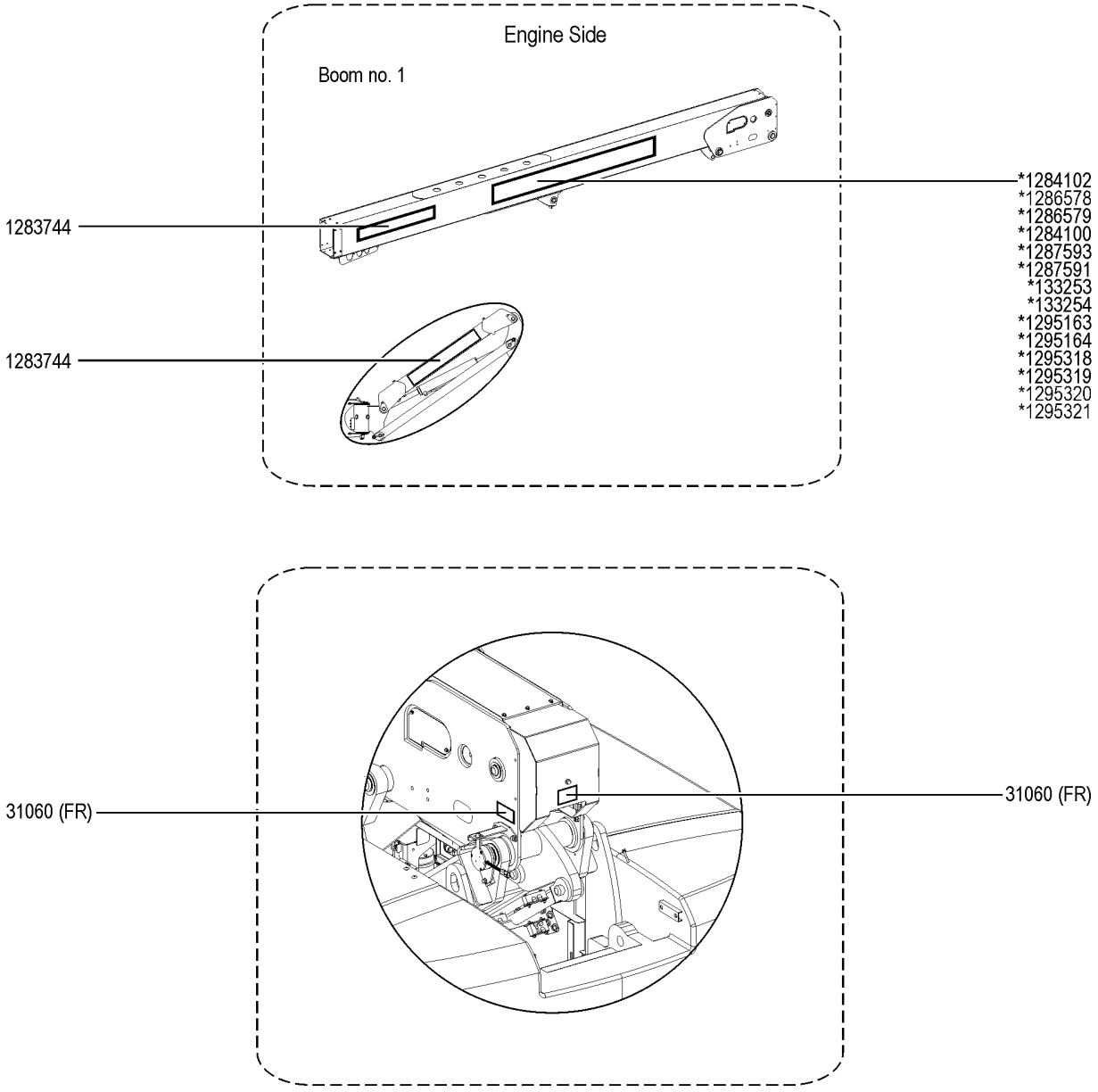

104.1 Decals with Words, Boom

Item	Part No.	Description	Qty.
1	31060GT	DECAL,DANGER DO NOT ALTER SWTC	2
2	133253GT	DECAL,COSM,GENIE S60 TRAX	1
3	133254GT	DECAL, COSM,GENIE S65 TRAX	1
4	1283744GT	DECAL, LIFT^POWER Option, Lift Power	1
5	1284100GT	DECAL, BOOM, GENIE S-65 XC	1
6	1284102GT	DECAL, BOOM, GENIE S-60XC	1
7	1286578GT	DECAL, BOOM, GENIE S-60 XC, BLUE	1
8	1286579GT	DECAL, BOOM, GENIE S-60 XC, BLK	1
9	1287591GT	DECAL, BOOM, GENIE S-65 XC, BLK	1
10	1287593GT	DECAL, BOOM, GENIE S-65 XC, BLUE	1
11	1295163GT	DECAL, BOOM, S-65 HF	1
12	1295164GT	DECAL, BOOM, S-60 HF	1
13	1295318GT	DECAL,BOOM,S-65HF,BLUE	1
14	1295319GT	DECAL,BOOM,S-65HF,BLACK	1
15	1295320GT	DECAL,BOOM,S-60HF,BLUE	1
16	1295321GT	DECAL,BOOM,S-60HF,BLACK	1
17	1295322GT	COSM. DECAL OPT, S65XC, NO ""GENIE"" MAST (from SN S60XCH - 49600),(from SN S65XCH - 49600)	1
18	1295323GT	COSM. DECAL OPT, S60XC, NO "GENIE" MAST (from SN S60XCH - 49600),(from SN S65XCH - 49600)	1
19	1295324GT	COSM. DECAL OPT, S-65 HF, NO "GENIE" MAST (from SN S60XCH - 49600),(from SN S65XCH - 49600)	1
25	1295325GT	COSM. DECAL OPT, S-60 HF, NO "GENIE" MAST (from SN S60XCH - 49600),(from SN S65XCH - 49600)	1
26	1295326GT	COSM. DECAL OPT, S65XC, BLUE, NO "GENIE" MAST (from SN S60XCH - 49600),(from SN S65XCH - 49600)	1
27	1295327GT	COSM. DECAL OPT, S60XC, BLUE, NO "GENIE" MAST (from SN S60XCH - 49600),(from SN S65XCH - 49600)	1
28	1295328GT	COSM. DECAL OPT, S-65 HF, BLUE, NO "GENIE" MAST (from SN S60XCH - 49600),(from SN S65XCH - 49600)	1
29	1295329GT	COSM. DECAL OPT, S-60 HF, BLUE, NO "GENIE" MAST (from SN S60XCH - 49600),(from SN S65XCH - 49600)	1
30	1295330GT	COSM. DECAL OPT, S65XC, BLACK, NO "GENIE" MAST (from SN S60XCH - 49600),(from SN S65XCH - 49600)	1
31	1295331GT	COSM. DECAL OPT, S60XC, BLACK, NO "GENIE" MAST (from SN S60XCH - 49600),(from SN S65XCH - 49600)	1
32	1295332GT	COSM. DECAL OPT, S-65 HF, BLACK, NO "GENIE" MAST (from SN S60XCH - 49600),(from SN S65XCH - 49600)	1
33	1295333GT	COSM. DECAL OPT, S-60 HF, BLACK, NO "GENIE" MAST (from SN S60XCH - 49600),(from SN S65XCH - 49600)	1

105.1 Decals with Words, Platform

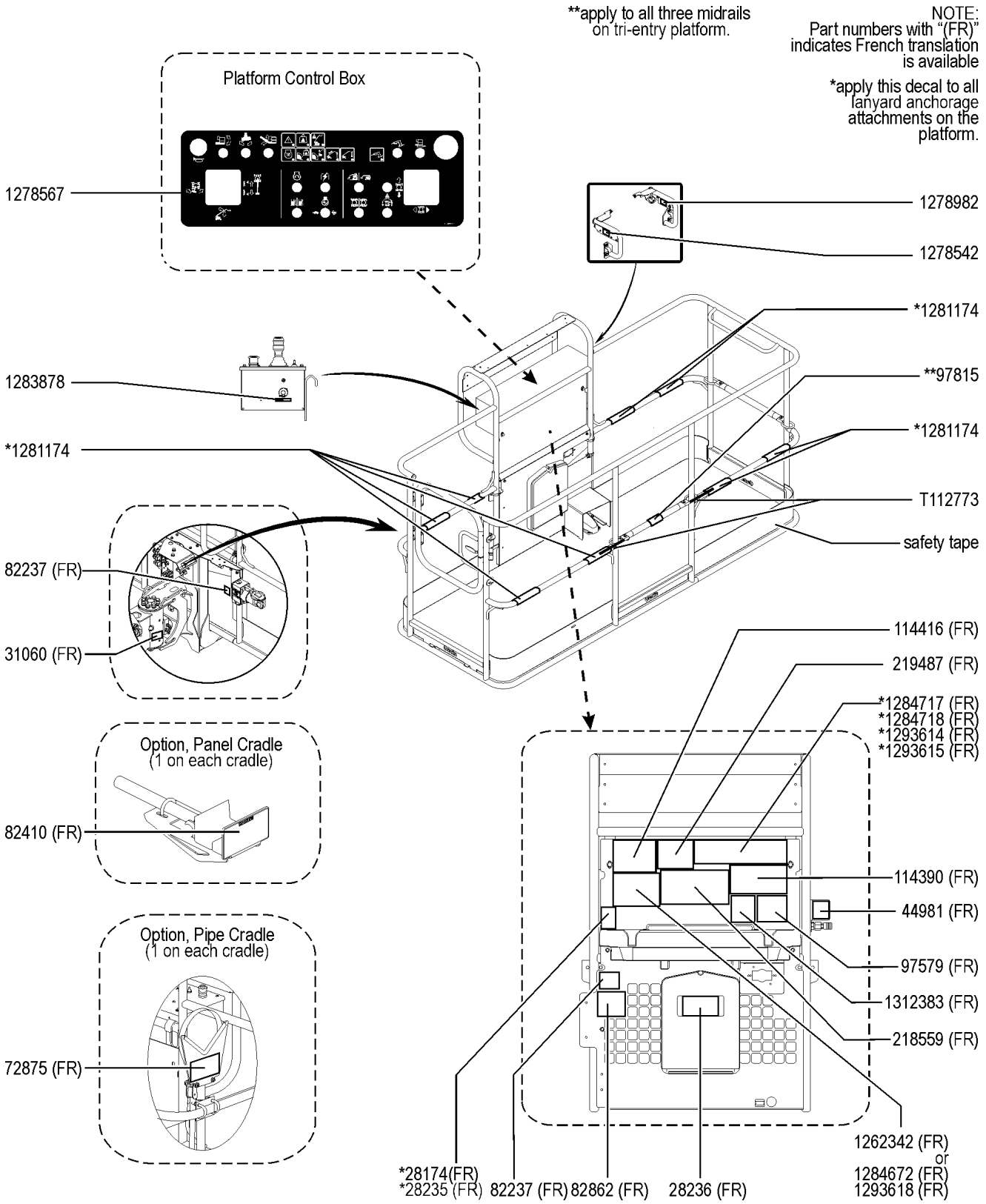

Item	Part No.	Description	Qty.
1	28174GT	DECAL,POWER TO PLATFORM 230V	1
2	28235GT	DECAL,POWER TO PLATFORM 115V	1
3	28236GT	DECAL,WARN,IMPROPER OPERATION	1
4	31060GT	DECAL,DANGER DO NOT ALTER SWTC	1
5	44981GT	DECAL,LABEL,AIRLINE 110 PSI Option, airline to plat	1
6	72875GT	DECAL,WARNING,PIPE CRADLE,BOOM Option, pipe cradle	2
7	82237GT	DECAL,DANGER,HIGH VOLTAGE Option, welder	2
8	82410GT	DECAL,WARNING,PANEL CRADLE Option, panel cradle	2
9	82862GT	DECAL,FIRE EXTINGUISHER Option, welder	1
10	97579GT	DECAL,DANGER,TIP-OVER,WELDER** Option, welder	1
11	97815GT	DECAL,LABEL,LOWER MIDRAIL	1
12	114390GT	DECAL,DANGER,ELECT HAZARD***	1
13	114416GT	DECAL,DANGER,TIPOVER,TILT	1
14	218559GT	DECAL,DANGER/WARNING COMBO	1
15	219487GT	DECAL,PLATFORM OVERLOAD	1
16	1278542GT	DECAL, INSTRUCTION, CONTACT ALARM	1
17	1278567GT	OVERLAY,PLATFORM CONTROLS,S-BOOM,XC	1
18	1278982GT	DECAL, INSTRUCTION, ACTUATOR SWITCH SOCKET	1
19	1281174GT	DECAL,LANYARD,FALL ARREST/FALL RESTRAINED	8
20	1283878GT	DECAL, TECHPRO LINK	1
21	1284672GT	DECAL, WARNING, RUNAWAY MACHINE, S-60/65 XC WORD	1
22	1284717GT	DECAL, DANGER, CAPACITY S-60 XC, ANSI WORD S-60 XC, S-60 TRAX	1
23	1284718GT	DECAL, DANGER, CAPACITY S-65 XC, ANSI WORD S-65 XC, S-65 TRAX	1
24	T112773GT	TAPE, PROTECTIVE MASK	2
25	1293614GT	DECAL,DANGER,CAPACITY S-65 HF,WORD	1
26	1293615GT	DECAL,DANGER,CAPACITY S-60 HF,WORD	1
27	82237GT	DECAL,DANGER,HIGH VOLTAGE	1
28	1262342GT	DECAL,WORD,SLOPE RATING,S60	1

105.1 Decals with Words, Platform

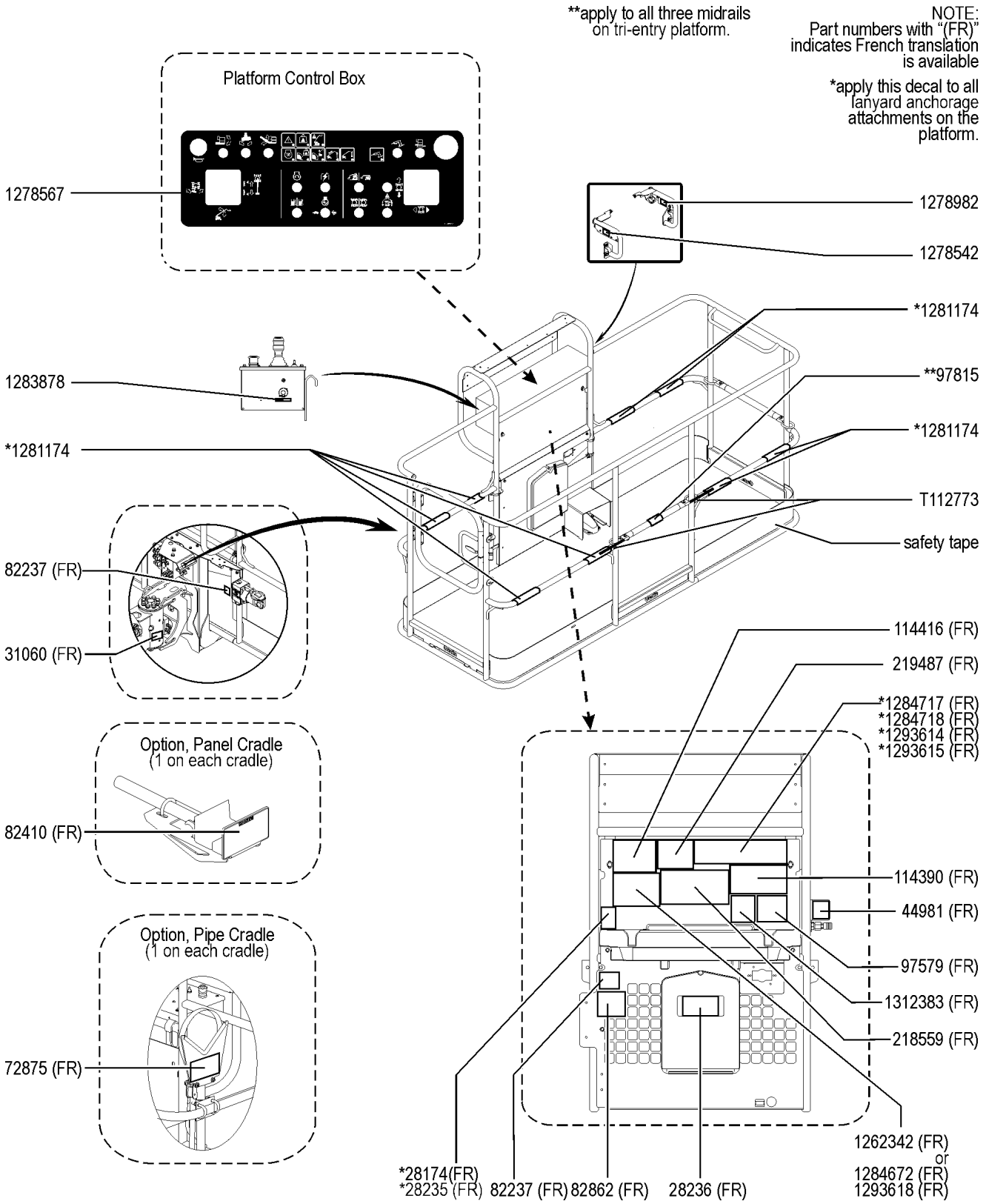

Item	*Part No.*	*Description*	*Qty.*
29	1312383GT	DECAL, WARN, 13FT (4M)PLATFORM, READ THE MANUAL, WORD	1
30	1293618GT	DECAL, WARNING, RUNAWAY MACHINE, S-60/65 HF WORD	1
31	1312385GT	DECAL, DANGER, CAPACITY, 13FT (4M)PLATFORM, S65XC, WORD (from SN S60XCH - 49600),(from SN S65XCH - 49600)	1

106.1 Decals with Symbols, Hydraulic Tank Side

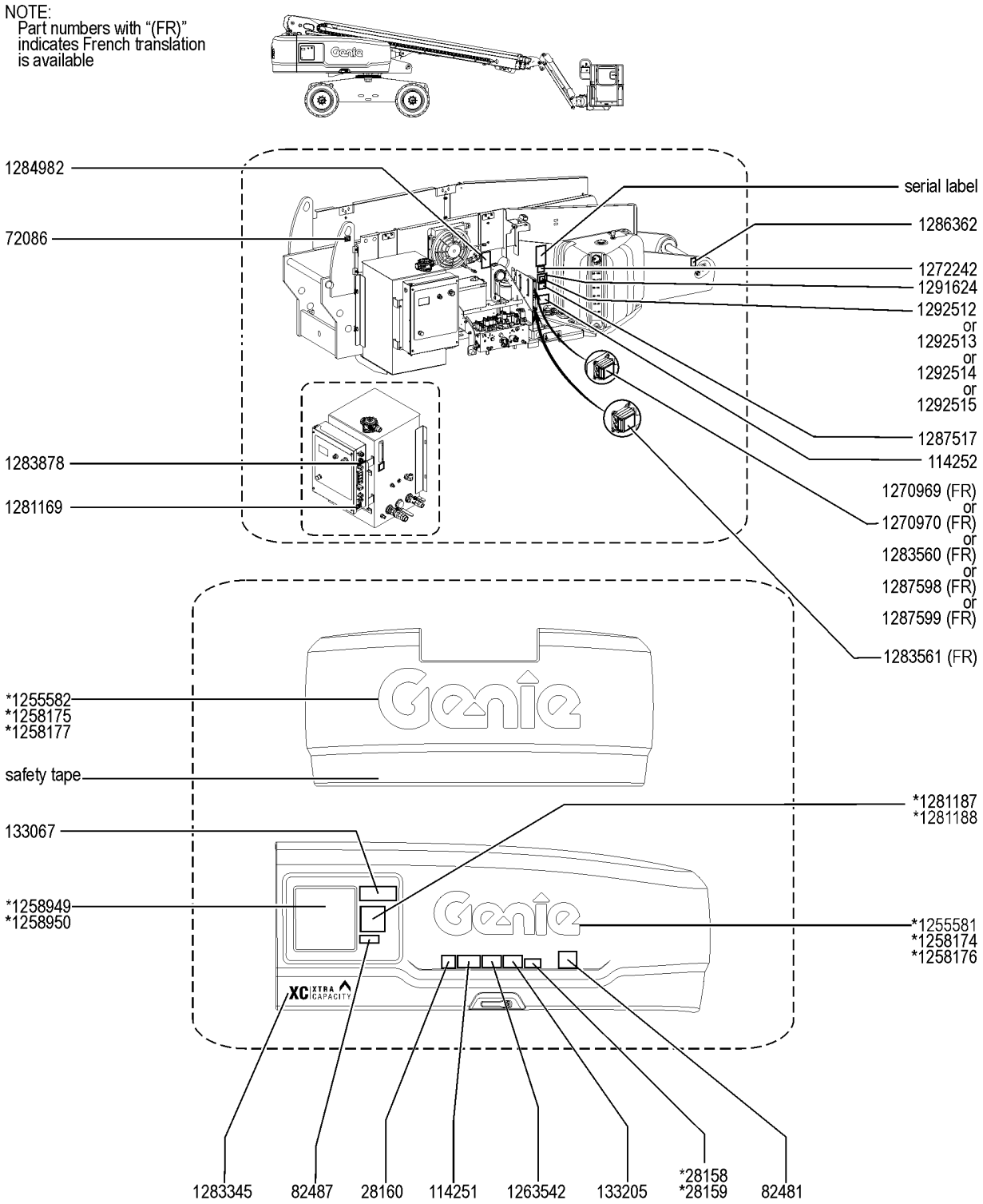

106.1 Decals with Symbols, Hydraulic Tank Side

Item	Part No.	Description	Qty.
1	28158GT	DECAL,LABEL,UNLEADED GAS ONLY Option, Fuel	1
2	28159GT	DECAL,DIESEL Option, Fuel	1
3	28160GT	DECAL,LABEL,LIQUID PROPANE Option, LPG Tank	1
4	72086GT	DECAL,LABEL,LIFTING EYE	1
5	82481GT	DECAL,SYMBOL-BATTERY SAFETY	1
6	82487GT	DECAL,SYMBOL-READ THE MANUAL	1
7	114251GT	DECAL,LABEL,NO SMOKING,SYMB	1
8	114252GT	DECAL,LABEL,TIP OVER LMT SWTCH	1
9	133067GT	DECAL,DANGER,ELEC.HAZ.STAY CLR	1
10	133205GT	DECAL,LABEL, ELECTRO HAZARD	1
11	1255581GT	DECAL COSMETIC,10" GENIE BLUE	1
12	1255582GT	DECAL COSMETIC,15" GENIE BLUE	1
13	1258174GT	DECAL COSMETIC,10" GENIE WHITE	1
14	1258175GT	DECAL COSMETIC,15" GENIE WHITE	1
15	1258176GT	DECAL COSMETIC,10" GENIE BLACK	1
16	1258177GT	DECAL COSMETIC,15" GENIE BLACK	1
17	1258949GT	OVERLAY GROUND CONTROLS S-BOOM JIB S-65 XC, S-65 TRAX	1
18	1258950GT	OVERLAY GROUND CONTROLS S-BOOM S-60 XC, S-60 TRAX	1
19	1263542GT	DECAL, COMPARTMENT ACCESS	1
20	1270969GT	DECAL, VEC, DEUTZ2.9T, S80 Deutz 2.9	1
21	1270970GT	DECAL, VEC, DEUTZ2011T, S80 Deutz 2011	1
22	1272242GT	DECAL,MACHINE REGISTRATION/OWN	1
23	1281169GT	DECAL,RECOVERY SWITCH	1
24	1281187GT	DECAL,EMERGENCY LOWERING,S-80 XC S-60 XC, S-60 TRAX	1
25	1281188GT	DECAL,EMERGENCY LOWERING S-65 XC, S-65 TRAX	1
26	1283345GT	DECAL, COVER, XC XTRA CAPACITY	1
27	1283560GT	DECAL, VEC 1, PERKINS 404F-E22TI, S60/65XC Perkins 404F-E22T	1
28	1283561GT	DECAL, VEC 2, PERKINS 404F-E22TI, S60/65XC Perkins 404F-E22T	1

106.1 Decals with Symbols, Hydraulic Tank Side

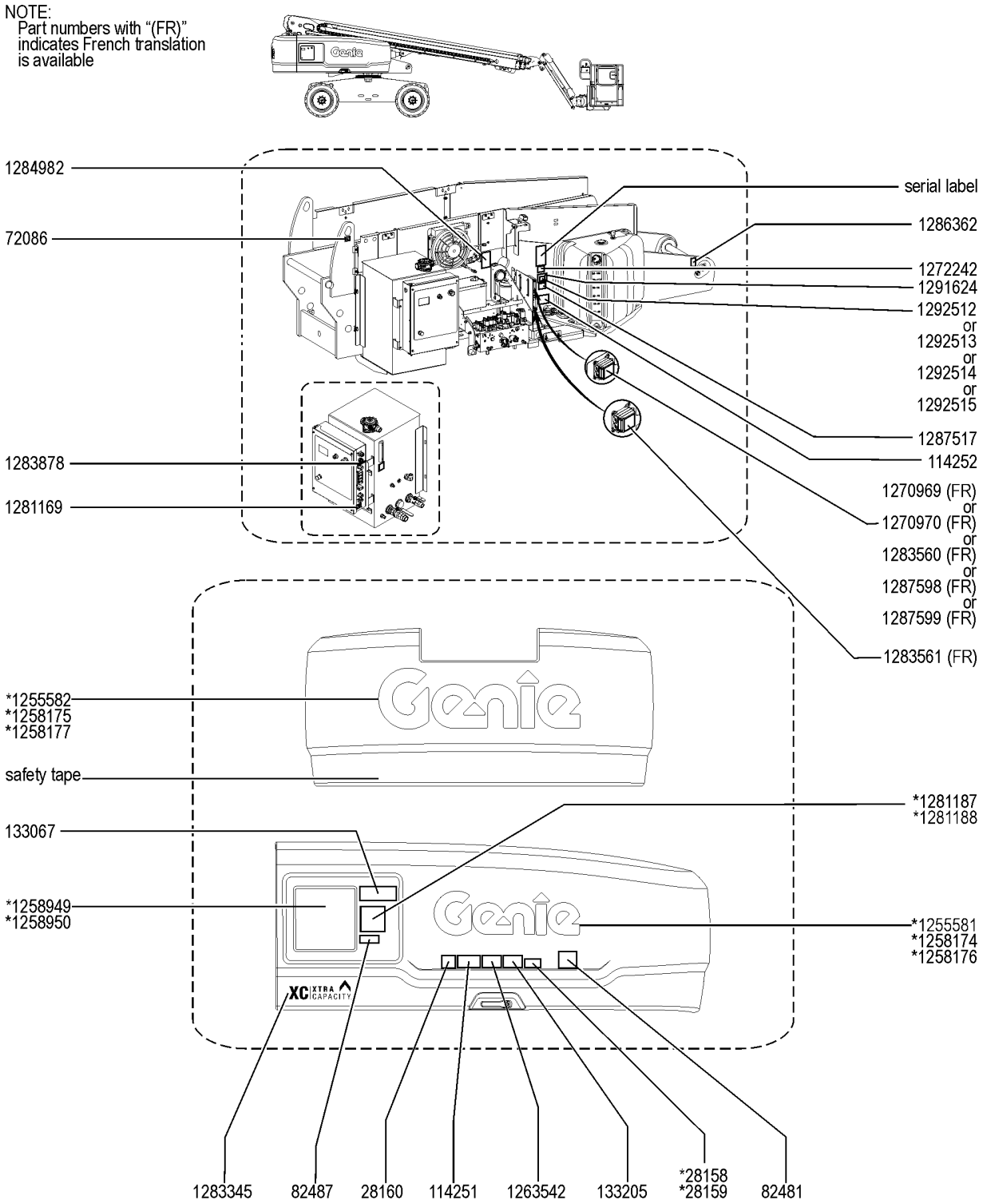

106.1 Decals with Symbols, Hydraulic Tank Side

Item	Part No.	Description	Qty.
29	1283878GT	DECAL, TECHPRO LINK	1
30	1284982GT	DECAL,ACCUMULATOR EXPLOSION HAZARD,SYMBOL	1
31	1286362GT	DECAL, BOOM SUPPORT, SYMBOL	1
32	1287598GT	DECAL, VEC, PERKINS404D, S60/65XC Perkins 404D-22	1
33	1287599GT	DECAL, VEC, FORD MSG425, S60/65XC Ford MSG-425	1
34	1291624GT	DECAL COSM,GENIE LIFT CONNECT,LEXAN COVER	1
35	1287517GT	DECAL, TRANSITION PERIOD DEUTZ ENGINE	1
36	1292512GT	DECAL COSM,GENIE LIFT CONNECT,ESN,SKU4-1	1
37	1292513GT	DECAL COSM,GENIE LIFT CONNECT,ESN,SKU4-2	1
38	1292514GT	DECAL COSM,GENIE LIFT CONNECT,ESN,SKU4-3	1
39	1292515GT	DECAL COSM,GENIE LIFT CONNECT,ESN,SKU4-4	1
40	82240GT	DECAL,LABEL,105 DB	1
41	1290806GT	DECAL,COSMETIC,13.5" GENIE, BLUE	1
42	1290807GT	DECAL,COSMETIC,13.5" GENIE, WHITE	1
43	1290808GT	DECAL,COSMETIC,13.5" GENIE, BLACK	1
44	1301030GT	DECAL, LABEL, ULSD DIESEL FUEL	1
45	1312387GT	DECAL, 4m Platform, max allowable chassis incl.'n, Symbol	1
46	1312388GT	DECAL, 13FT (4M) PLATFRM, MAX ALLOWBLE CHASSIS INCLIN, WORD	1
47	1313945GT	DECAL,VEC, WP3.2	1
48	1313946GT	DECAL,S65XC EMISSION INFO,CHINA IV	1

107.1 Decals with Symbols, Chassis

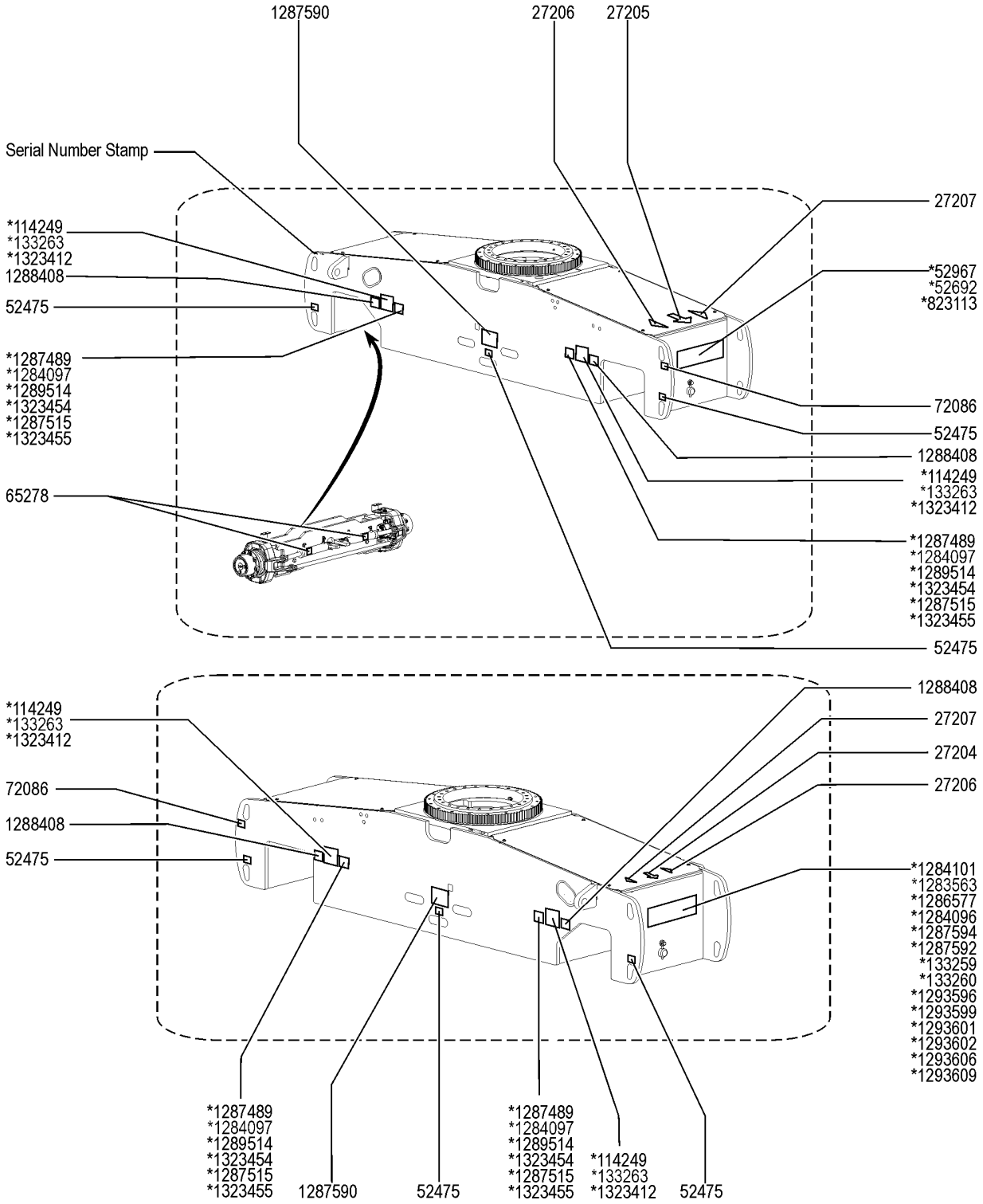

Item	Part No.	Description	Qty.
1	27204GT	DECAL,ARROW BLUE	1
2	27206GT	DECAL,TRIANGLE,BLUE	2
3	27207GT	DECAL,TRIANGLE,YELLOW	2
4	52475GT	DECAL,LABEL,TRANSPORT TIEDOWN*	6
5	52692GT	DECAL,COSMETIC,4X4 BLUE	1
6	52967GT	DECAL,COSMETIC,4 X 4	1
7	65278GT	DECAL,CAUTION,NO STEP	2
8	27205GT	DECAL,ARROW YELLOW LRG 9"	2
9	72086GT	DECAL,LABEL,LIFTING EYE	2
10	114249GT	DECAL,LABEL,TIPOVER,TIRES,SYMB S-60 XC, S-65 XC	4
11	133259GT	DECAL,COSM, S60 TRAX S-60 TRAX	1
12	133260GT	DECAL,COSM, S65 TRAX S-65 TRAX	1
13	133263GT	DECAL,LABEL,TIPOVER,TRAX,SYMB (to SN S65XCH-50392) S-60 TRAX, S-65 TRAX	4
13B	1323412GT	DECAL,LABEL,TIPOVER,TRAX,SYMB (from SN S65XCH-50393) S-60 TRAX, S-65 TRAX	4
14	823113GT	DECAL,COSM,4X4,BLACK	1
15	1283563GT	DECAL, CHASSIS, S-60 XC, BLUE S-60 XC	1
16	1284096GT	DECAL, CHASSIS, S-65 XC S-65 XC	1
17	1284097GT	DECAL,LABEL,WHEEL LOAD S65 XC S-65 XC	4
18	1284101GT	DECAL, CHASSIS, S-60 XC S-60 XC	1
19	1286577GT	DECAL, CHASSIS, S-60 XC, BLK S-60 XC	1
20	1287489GT	DECAL,LABEL,WHEEL LOAD S60 XC S-60 XC	4
21	1287515GT	DECAL, WHEEL LOAD S65 TRAX (to SN S65XCH-50392) S-65 TRAX	4
21B	1323455GT	DECAL, WHEEL LOAD S65XC TRAX (from SN S65XCH-50393) S-65 TRAX	4
22	1287590GT	DECAL, TRANSPORT/LIFTING, S-60/65XC	2
23	1287592GT	DECAL, CHASSIS, S-65 XC, BLK S-65 XC	1
24	1287594GT	DECAL, CHASSIS, S-65 XC, BLUE S-65 XC	1
25	1289514GT	DECAL, WHEEL LOAD S60XC TRAX (to SN S65XCH-50392) S-60 TRAX	4
25B	1323454GT	DECAL, WHEEL LOAD S60XC TRAX (from SN S65XCH-50393) S-60 TRAX	4

107.1 Decals with Symbols, Chassis

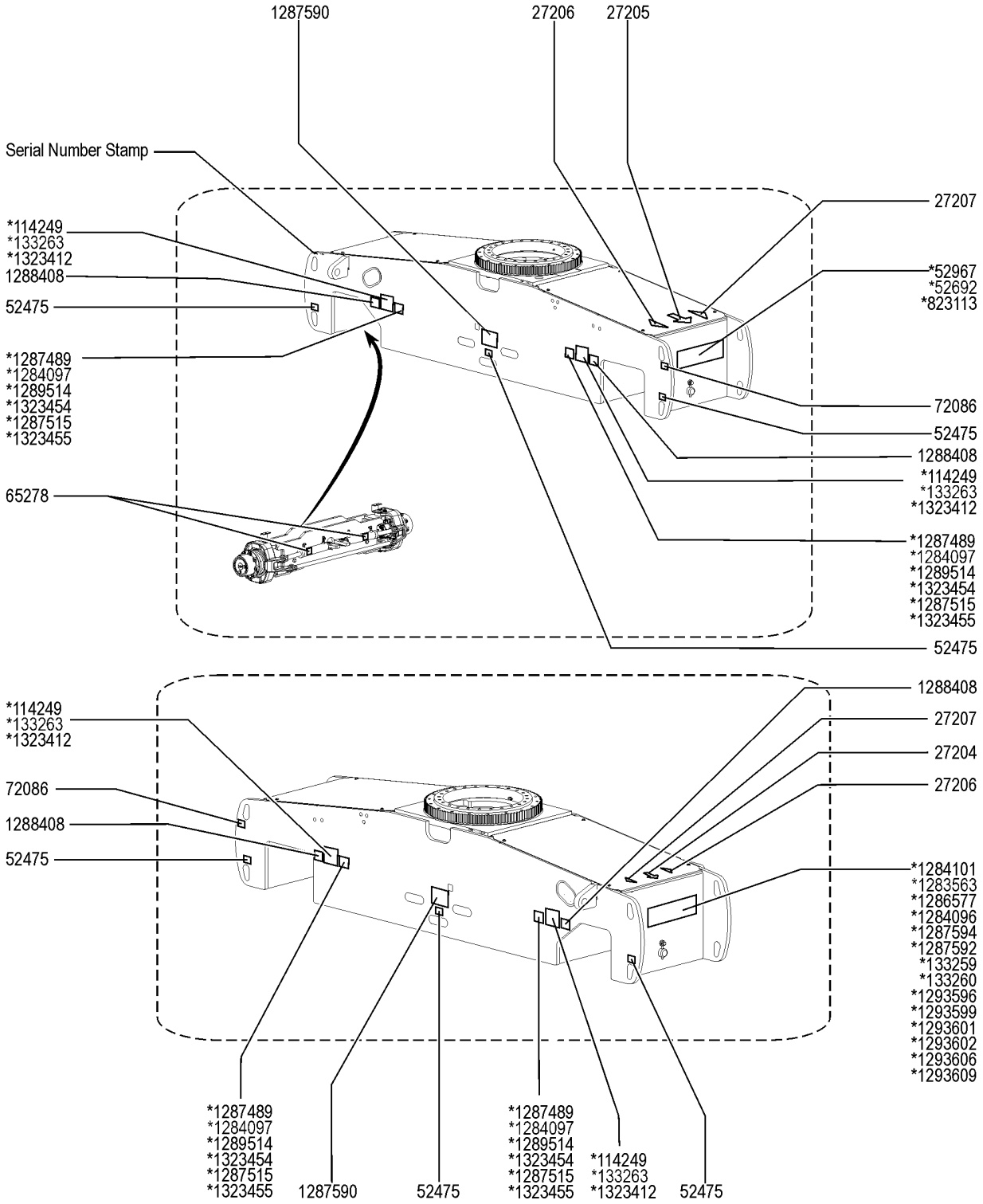

Item	Part No.	Description	Qty.
26	1293596GT	DECAL, CHASSIS, S-65 HF	1
27	1293599GT	DECAL, CHASSIS, S-65 HF, BLK	1
28	1293601GT	DECAL, CHASSIS, S-65 HF, BLUE	1
29	1293602GT	DECAL, CHASSIS, S-60 HF, BLUE	1
30	1293606GT	DECAL, CHASSIS, S-60 HF, BLK	1
31	1293609GT	DECAL, CHASSIS, S-60 HF	1
32	1288408GT	DECAL,TIRE SEALANT,3.25 X 7.5	4
33	1290025GT	DECAL, WARNING, CRUSHING HAZARD, 35X70	1
34	1290026GT	DECAL, LOCK TRANSPORT, S60/65	1
35	1299668GT	DECAL, TRANSPORT, APPROVED OCTL	2
36	1312379GT	DECAL, LOCK TRANSPORT, S65XC	1

108.1 Decals with Symbols, Engine Side

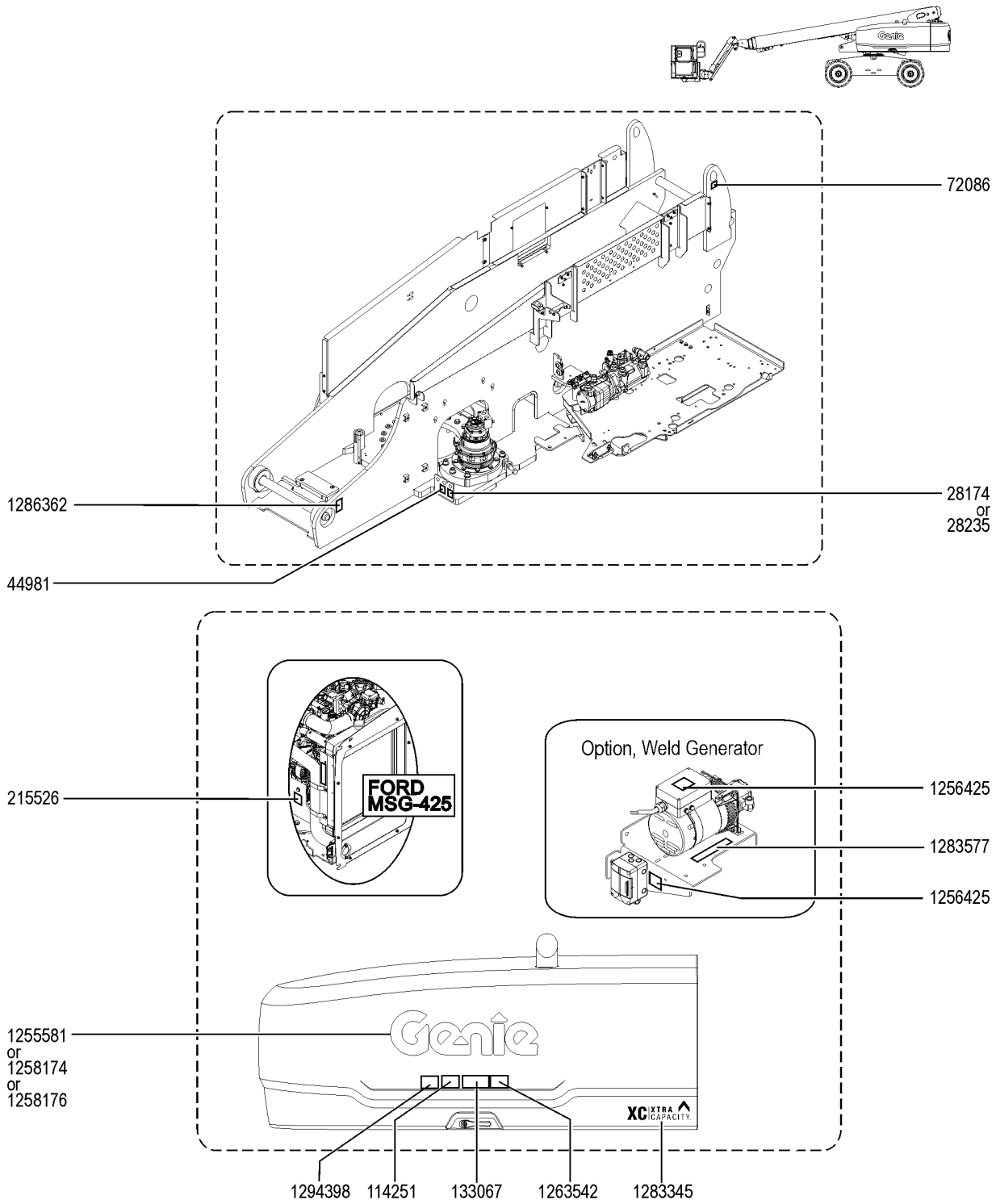

108.1 Decals with Symbols, Engine Side

Item	Part No.	Description	Qty.
1	28174GT	DECAL,POWER TO PLATFORM 230V	1
2	28235GT	DECAL,POWER TO PLATFORM 115V	1
3	44981GT	DECAL,LABEL,AIRLINE 110 PSI Option, airline to plat	1
4	72086GT	DECAL,LABEL,LIFTING EYE	1
5	114251GT	DECAL,LABEL,NO SMOKING,SYMB	1
6	133067GT	DECAL,DANGER,ELEC.HAZ.STAY CLR	1
7	215526GT	DECAL,LABEL,BELT,MSG425 Ford MSG-425	1
8	1255581GT	DECAL COSMETIC,10" GENIE BLUE	1
9	1256425GT	DECAL, DANGER, ELECTROCUTION H Option, Weld Generator	2
10	1258174GT	DECAL COSMETIC,10" GENIE WHITE	1
11	1258176GT	DECAL COSMETIC,10" GENIE BLACK	1
12	1263542GT	DECAL, COMPARTMENT ACCESS	1
13	1283345GT	DECAL, COVER, XC XTRA CAPACITY	1
14	1283577GT	DECAL, LIFT^POWER, 1X7 INCH Option, Welder	1
15	1286362GT	DECAL, BOOM SUPPORT, SYMBOL	1
16	1294398GT	DECAL, ANSI/CSA COMPLIANT	1
17	1301075GT	DECAL, CENTER THE RAW AIR HOSE	1
18	1304217GT	DECAL, EXPLOSION HAZARD	1

109.1 Decals with Symbols, Boom

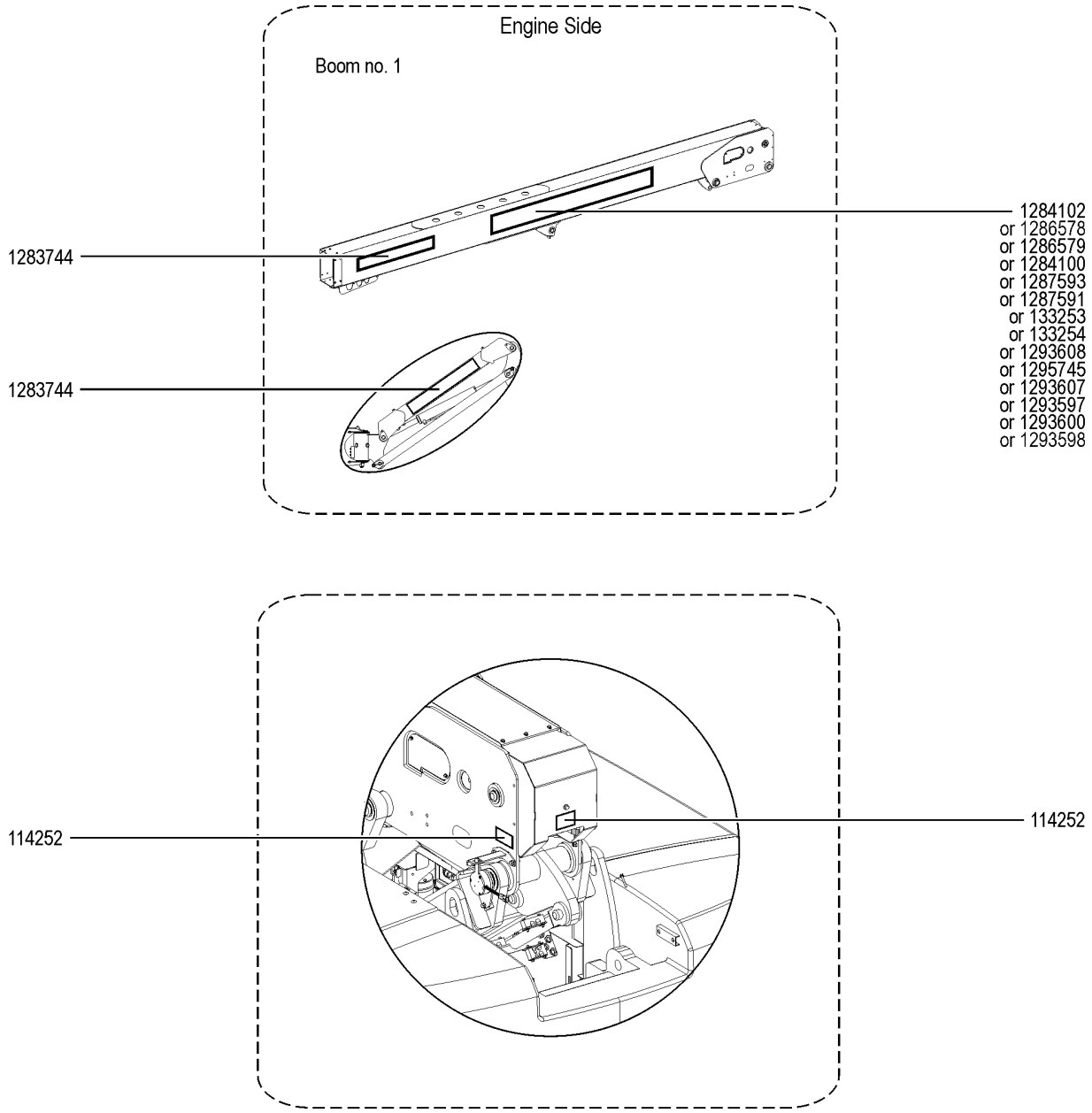

Item	Part No.	Description	Qty.
1	114252GT	DECAL,LABEL,TIP OVER LMT SWTCH	2
2	133253GT	DECAL,COSM,GENIE S60 TRAX S-60 TRAX	1
3	133254GT	DECAL, COSM,GENIE S65 TRAX S-65 TRAX	1
4	1283744GT	DECAL, LIFT^POWER Option, Lift Power	1
5	1284100GT	DECAL, BOOM, GENIE S-65 XC S-65 XC	1
6	1284102GT	DECAL, BOOM, GENIE S-60XC S-60 XC	1
7	1286578GT	DECAL, BOOM, GENIE S-60 XC, BLUE S-60 XC	1
8	1286579GT	DECAL, BOOM, GENIE S-60 XC, BLK S-60 XC	1
9	1287591GT	DECAL, BOOM, GENIE S-65 XC, BLK S-65 XC	1
10	1287593GT	DECAL, BOOM, GENIE S-65 XC, BLUE S-65 XC	1
11	1293608GT	DECAL, BOOM, GENIE S-60 HF	1
12	1295745GT	DECAL, BOOM, GENIE S-60 HF, BLUE	1
13	1293607GT	DECAL, BOOM, GENIE S-60 HF, BLK	1
14	1293597GT	DECAL, BOOM, GENIE S-65 HF	1
15	1293600GT	DECAL,BOOM,GENIE S-65HF,BLUE	1
16	1293598GT	DECAL, BOOM, GENIE S-65 HF, BLK	1
17	216583GT	DECAL,COSM,S-65 TRAX, WHITE	1
18	228792GT	DECAL,S-60 TRAX, WHITE	1
19	1295161GT	DECAL, BOOM, GENIE S-65 XC	1
20	1295162GT	DECAL, BOOM, GENIE S-65 HF	1
21	1295163GT	DECAL, BOOM, S-65 HF	1
22	1295164GT	DECAL, BOOM, S-60 HF	1
23	1295314GT	DECAL,BOOM,S-65XC,BLUE	1
24	1295315GT	DECAL,BOOM,S-65XC,BLACK	1
25	1295316GT	DECAL,BOOM,S-60XC,BLUE	1
26	1295317GT	DECAL,BOOM,S-60XC,BLACK	1
27	1295318GT	DECAL,BOOM,S-65HF,BLUE	1
28	1295320GT	DECAL,BOOM,S-60HF,BLUE	1

109.1 Decals with Symbols, Boom

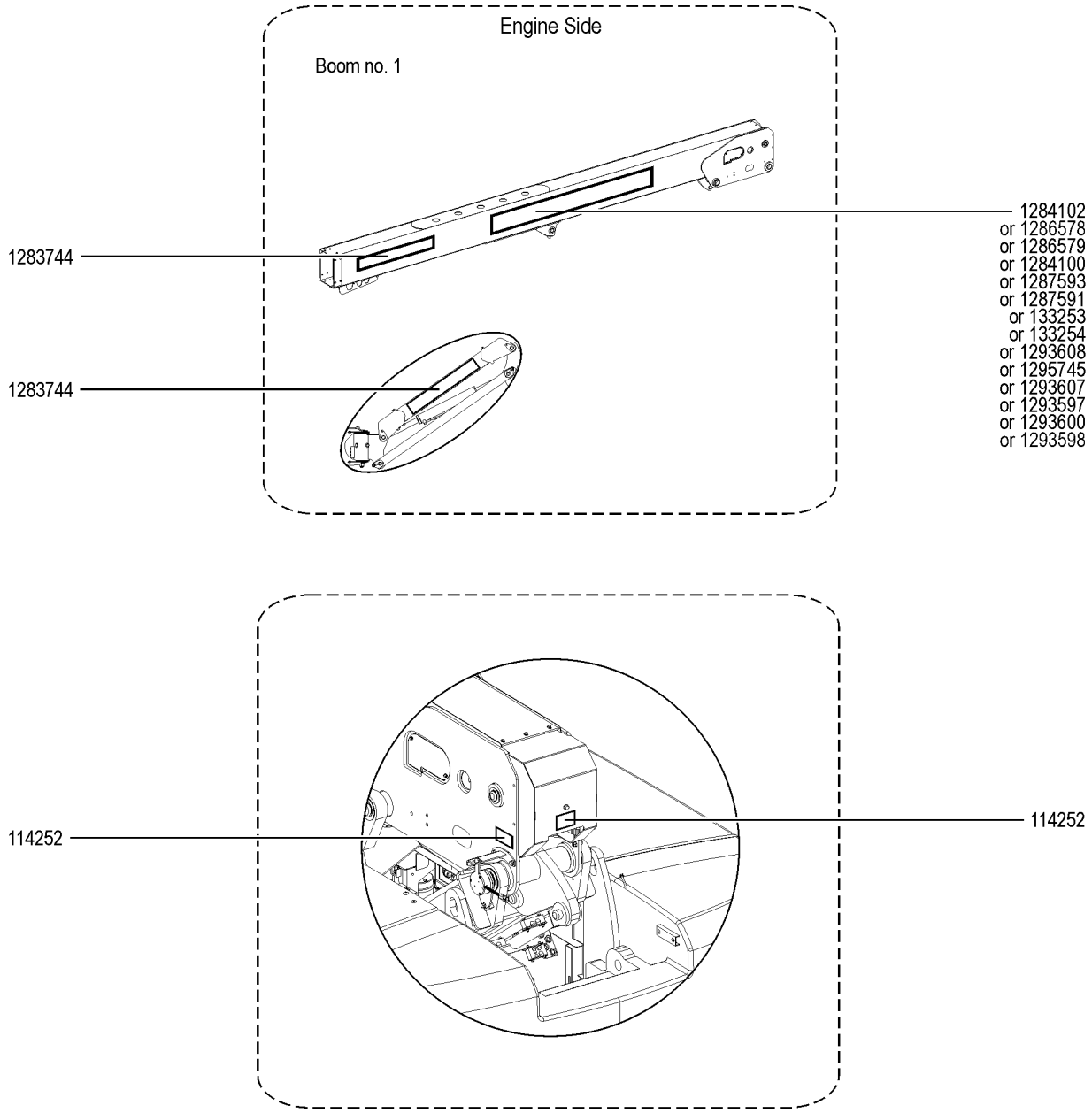

Item	Part No.	Description	Qty.
29	1295321GT	DECAL,BOOM,S-60HF,BLACK	1
30	218003GT	DECAL, S-60 TRAX, BLACK	1
31	1295319GT	DECAL,BOOM,S-65HF,BLACK	1

110.1 Decals with Symbols, Platform

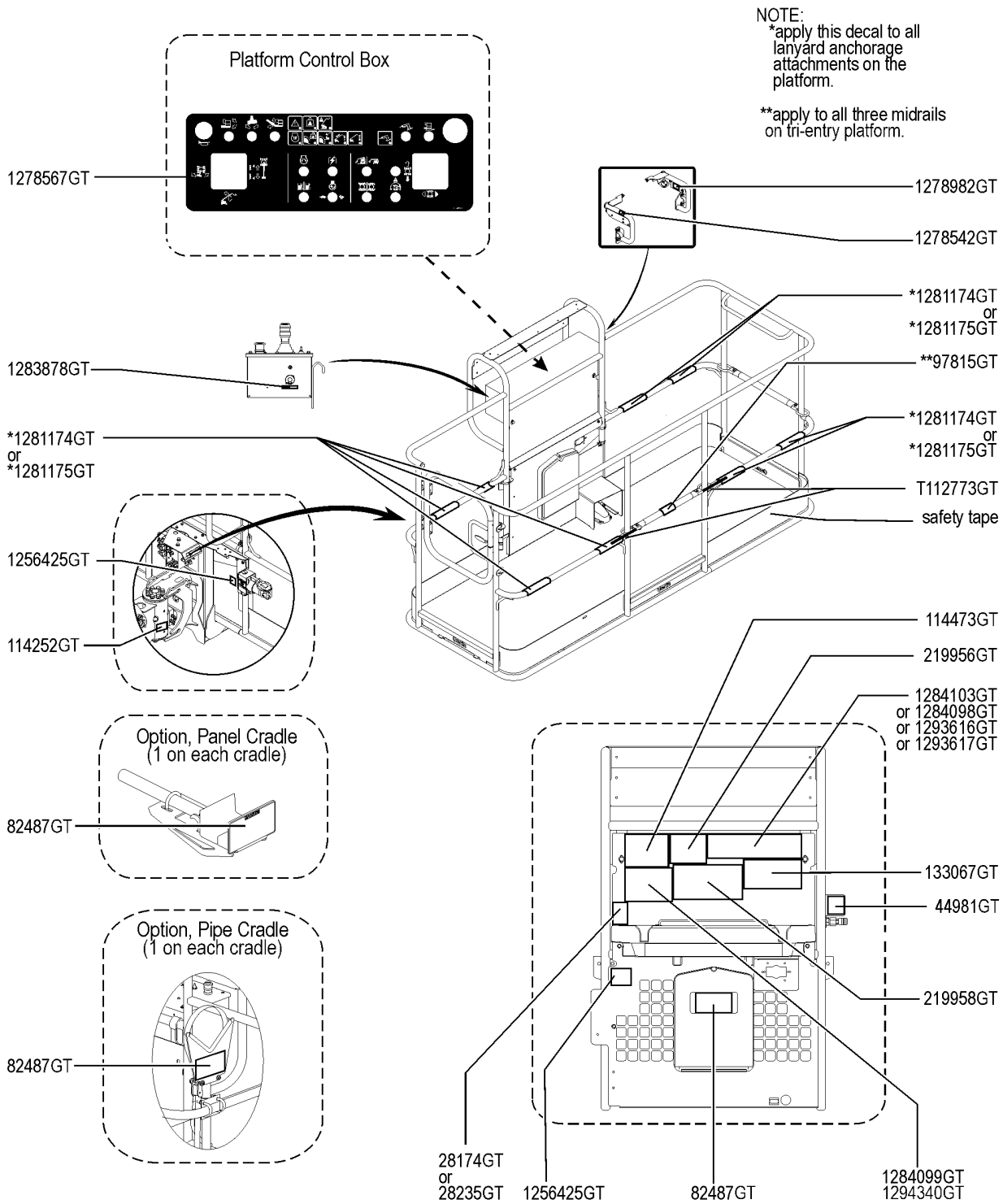

Item	Part No.	Description	Qty.
1	28174GT	DECAL,POWER TO PLATFORM 230V	1
2	28235GT	DECAL,POWER TO PLATFORM 115V	1
3	44981GT	DECAL,LABEL,AIRLINE 110 PSI Option, Airline to Plat	1
4	82487GT	DECAL,SYMBOL-READ THE MANUAL	1
5	97815GT	DECAL,LABEL,LOWER MIDRAIL	1
6	114252GT	DECAL,LABEL,TIP OVER LMT SWTCH	1
7	114473GT	DECAL,DANGER,TIPOVER,TILT,SYM	1
8	133067GT	DECAL,DANGER,ELEC.HAZ.STAY CLR	1
9	219956GT	DECAL,PLATFORM OVERLOAD	1
10	219958GT	DECAL,TIP-OVER,CRUSH	1
11	1256425GT	DECAL, DANGER, ELECTROCUTION H Option, Welder	1
12	1278542GT	DECAL, INSTRUCTION, CONTACT ALARM	1
13	1278567GT	OVERLAY,PLATFORM CONTROLS,S-BOOM,XC	1
14	1278982GT	DECAL, INSTRUCTION, ACTUATOR SWITCH SOCKET	1
15	1281174GT	DECAL,LANYARD,FALL ARREST/FALL RESTRAINED ANSI,(from SN S60CH - 50150),(from SN S65CH - 50150)	8
16	1281175GT	DECAL,LANYARD,FALL RESTRAINED CE(to SN S60CH - 50149),(to SN S65CH - 50149)	8
17	1283878GT	DECAL, TECHPRO LINK	1
18	1284098GT	DECAL,DANGER,CAPICITY S-65 XC,SYMBOL S-65 XC , S-65 TRAX	1
19	1284099GT	DECAL,WARNING,RUNAWAY MACHINE,S-60/65 XC,SYMBOL	1
20	1284103GT	DECAL,DANGER,CAPICITY S-60 XC,SYMBOL S-60 XC, S-60 TRAX	1
21	T112773GT	TAPE, PROTECTIVE MASK	2
22	1256425GT	DECAL, DANGER, ELECTROCUTION H	1
23	1294340GT	DECAL, WARNING, RUNAWAY MACHINE,S-60/65 HF,SYMBOL	1
24	1293616GT	DECAL,DANGER,CAPICITY S-65 HF,SYMBOL	1
25	1293617GT	DECAL,DANGER,CAPICITY S-60 HF,SYMBOL	1
26	1295271GT	DECAL, DANGER, CAPACITY, S65XC 13FT (4M)PLATFORM, SYMBOL	1
27	1299669GT	DECAL, WARN, 4M PLATFORM, READ THE MANUAL	1
28	1312389GT	DECAL, WARN, 13FT (4M) PLATFORM, READ THE MANUAL, SYMBOL	1

201.1 Steer End

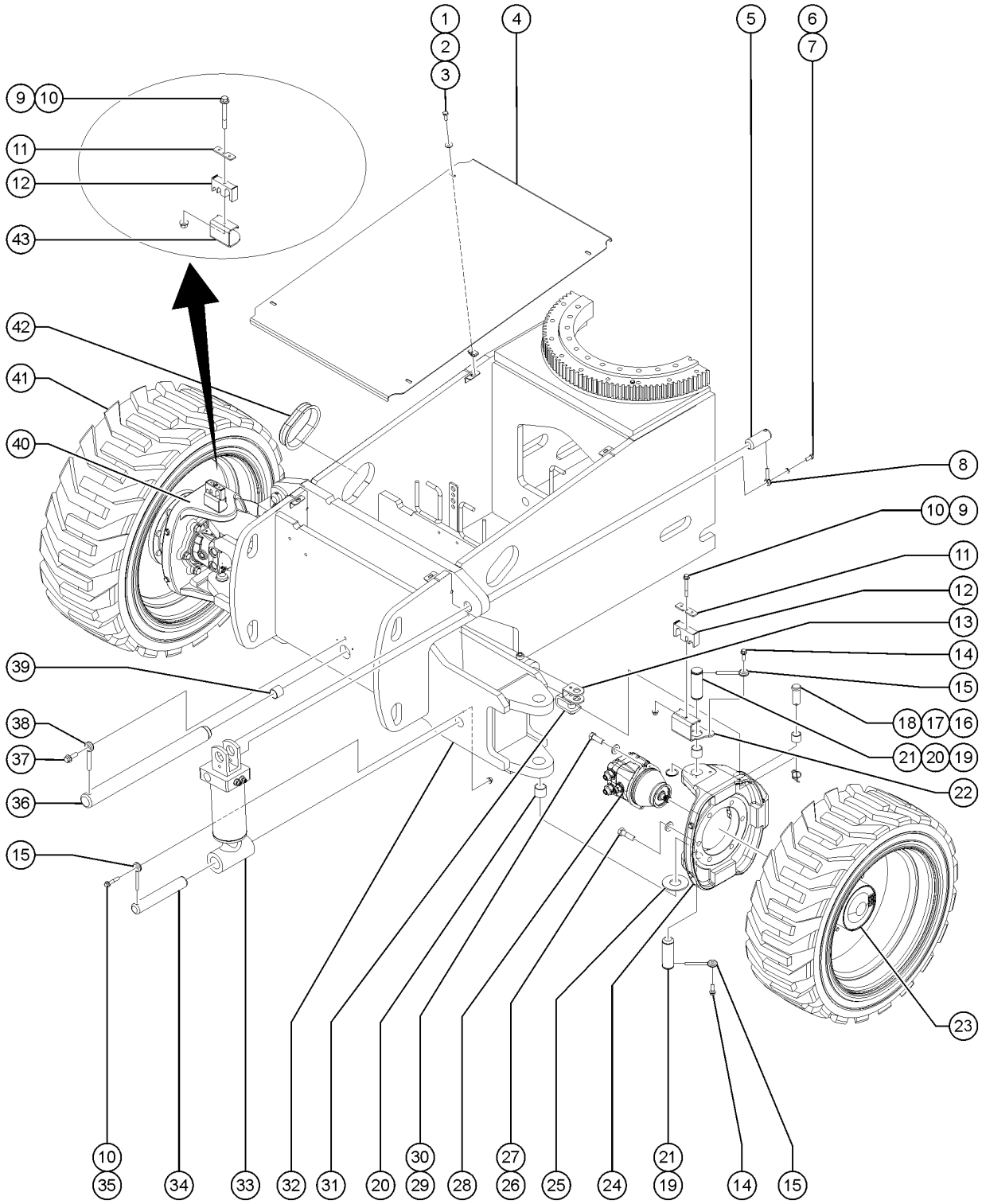

Item	Part No.	Description	Qty.
1	824059GT	SCREW, HHC, 1/4-20 X .75, 8, ZAG does not include decals, refer to section 1	4
2	824113GT	WASHER,FLAT,USS,1/4,ZAG	4
3	56912GT	SPRING CLIP,1/4-20,.025-.15X.54,ZAG	4
4	1255703GT	COVER,DRIVE CHASSIS	1
5	94221GT	PIN,1.50DIAX3.75LG,1HOLE	2
6	824067GT	SCREW, HHC, 3/8-16 X 1, 8, ZAG	2
7	824110GT	WASHER, LOCK, 3/8, ZAG	2
8	1255452GT	ROD END,.375 X 2.25,ZAG	2
9	824095GT	SCREW, HHF, 3/8-16 X 3, 8, ZAG	2
10	1274322GT	NUT,NYLOCK FLG,3/8-16,F,ZAG	4
11	1255706GT	CLAMP TOP,HOSE ROUTING***	2
12	106516GT	CLAMP,HOSE,2X4,1X6,2X8***	2
13	59460GT	CYLINDER,STEERING***	2
13-	89294GT	SEAL KIT CYLINDER (59460) 4WD models	
13B	125865GT	CYLINDER, STEER for 88884	2
14	824091GT	SCREW, HHF, 3/8-16 X 1.25, 8, ZAG for 88884	4
15	825019GT	ROD END, .375X3.69, ZAG for 88884	6
16	824127GT	PIN, CLEVIS, SAE 1.0 X 2.41, ZAG for 88884	6
17	25817GT	BEARING,1.00IDX1.25ODX1.00L for 88884	6
18	824129GT	RUE RING,1.0,ZAG for 88884	6
19	110221GT	PIN,GROOVE/HOLE,1.50 DIAX4.475 for 88884	4
20	119619GT	BEARING,1.5 ID X 1.75 ODX1.5L	4
21	825796GT	SNAP RING,EXTERNAL,1.50,ZAG	4
22	1255705GT	BRACKET,HOSE ROUTING,AXLE LH	1
23		WHEEL DRIVE 57.5:1 4WD PN 231612 REPLACED OMNIGEAR WHEEL DRIVE PN 229702	2
23-	139965GT	WHEEL STUD,5/8-18,OMNI*** for 229702	
23-	139966GT	ROD,DISCONNECT,OMNI*** for 229702	
23-	139967GT	CAP,DISENGAGE,OMNI*** for 229702	

201.1 Steer End

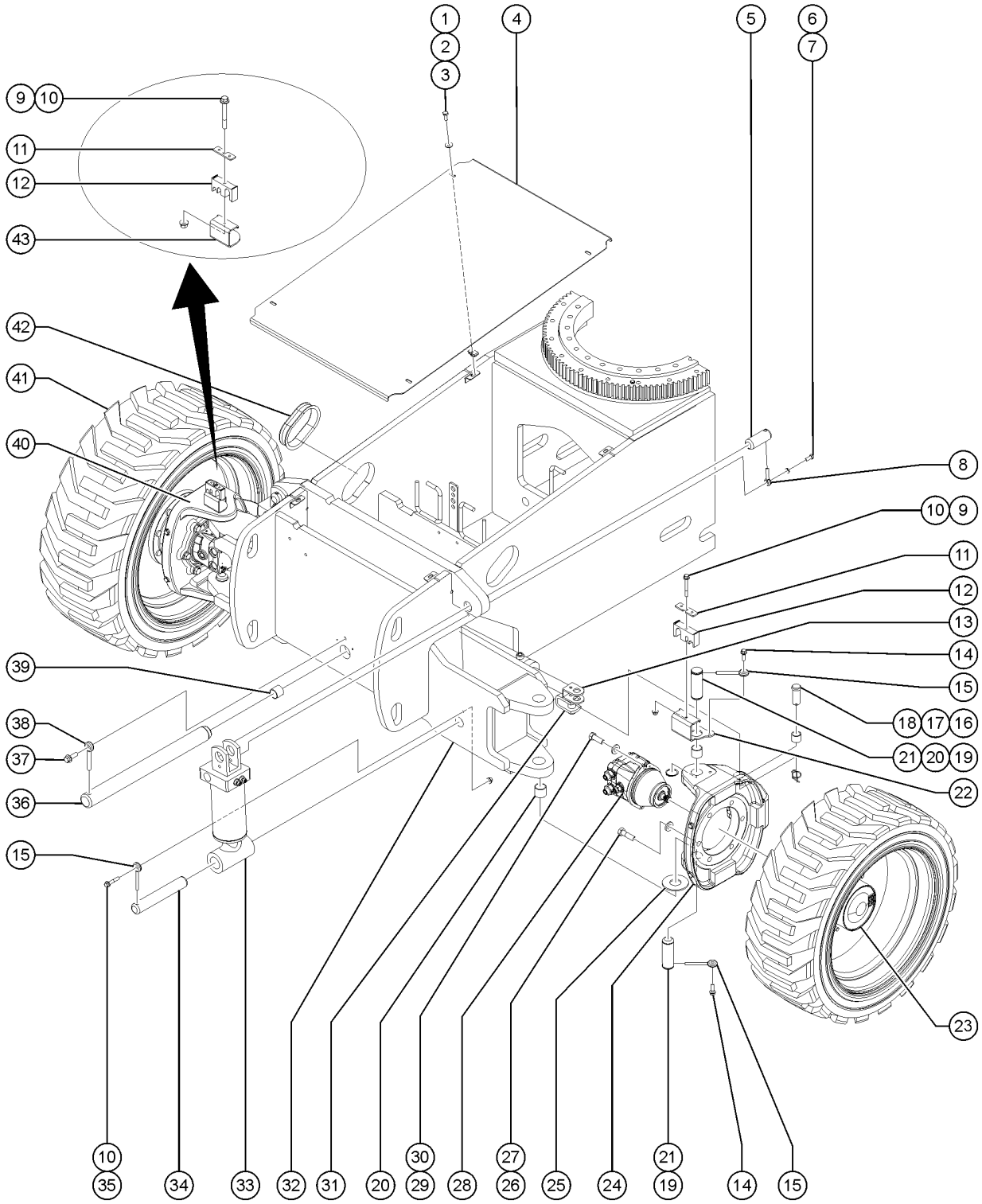

Item	Part No.	Description	Qty.
23-	139968GT	O-RING,END COVER,OMNI*** for 229702	
23-	139969GT	LINING KIT,BRAKE,OMNI*** for 229702	
23-	139970GT	SEAL KIT,BRAKE,OMNI*** for 229702	
23-	139971GT	BEARING KIT,OMNI*** for 229702	
23-	139972GT	SEAL KIT,GEARBOX,OMNI*** for 229702	
23-	147033GT	O-RING,PIPE PLUG KIT,OMNI*** for 229702	
23-	147034GT	PIPE PLUG KIT,OMNI*** for 229702	
23-	1260084GT	END CAP, WHEEL DRIVE for 229702	
23B	88887GT	WHEEL DRIVE 56:1 2WD for 88887	2
23B-	102126GT	SEAL KIT,DRIVE HUB (88887) for 88887	
23B-	102131GT	DISCONNECT KIT (88887) for 88887	
23B-	215642GT	BRAKE KIT (88886)*** for 88887	
23B-	102163GT	RING,RETAINING*** for 88887	
23B-	215340GT	LOCKRING, RR for 88887	
23B-	102167GT	SHAFT,INPUT DRIVE HUB for 88887	
23B-	102162GT	LUG,STUD/WHEEL (88887) for 88887	
23B-	102516GT	RING,RETAINING,INTERNAL	
23B-	102126GT	SEAL KIT,DRIVE HUB (88887) for 88887	
23B-	1274613GT	HUB SCREW	
23C	231612GT	WHEEL DRIVE,W/BRAKE 4WD	2
23C-	102158GT	O-RING,.103 X 4.737,VITON, 75D	
23C-	106117GT	O-RING,2-010,VITON	
23C-	230849GT	WHEEL STUD,5/8-18X67MM	
23C-	139966GT	ROD,DISCONNECT,OMNI***	
23C-	139967GT	CAP,DISENGAGE,OMNI***	
23C-	139968GT	O-RING,END COVER,OMNI***	
23C-	139969GT	LINING KIT,BRAKE,OMNI***	
23C-	139970GT	SEAL KIT,BRAKE,OMNI***	

201.1 Steer End

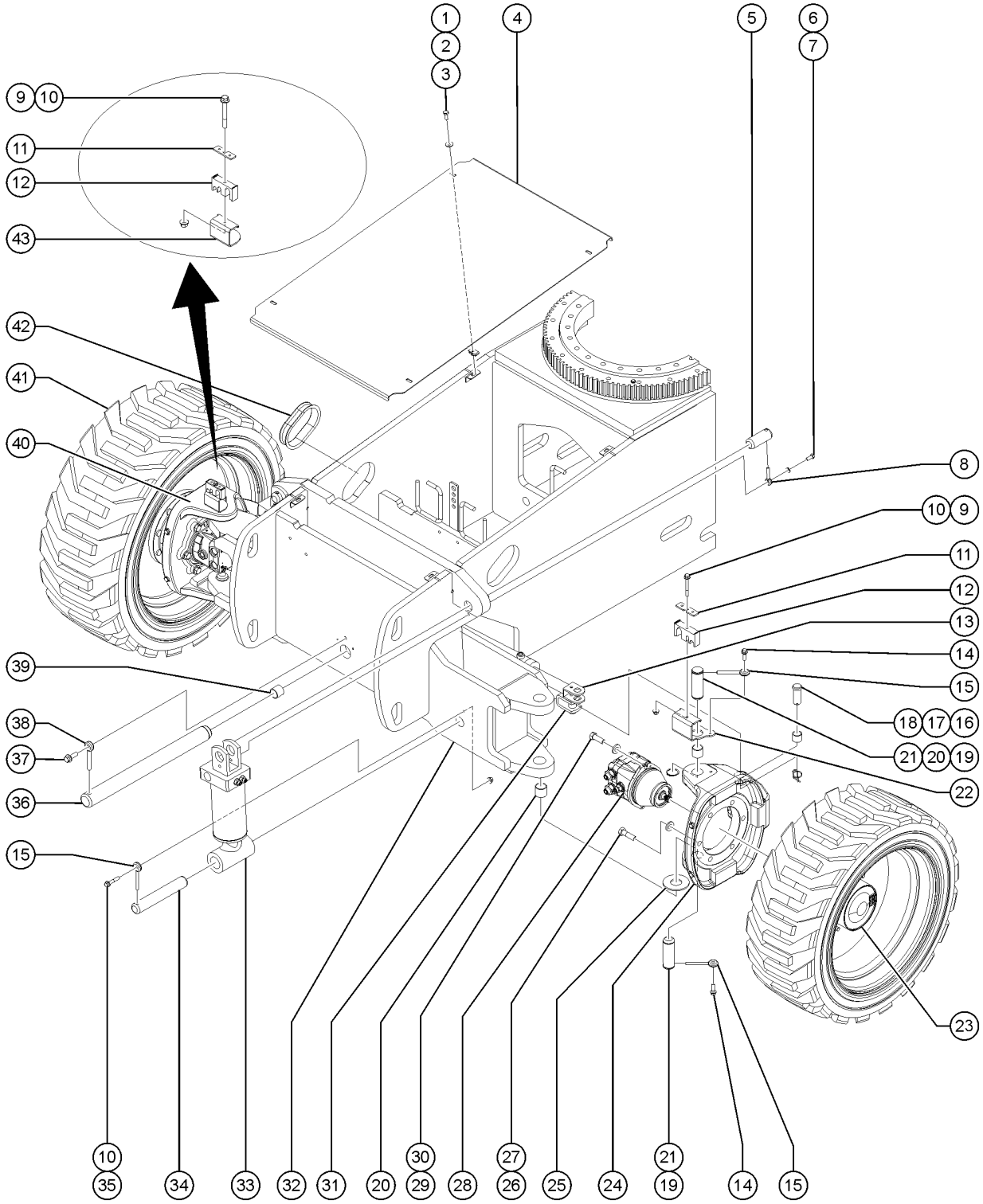

Item	Part No.	Description	Qty.
23C-	139971GT	BEARING KIT,OMNI***	
23C-	139972GT	SEAL KIT,GEARBOX,OMNI***	
23C-	147033GT	O-RING,PIPE PLUG KIT,OMNI***	
23C-	147034GT	PIPE PLUG KIT,OMNI***	
23C-	1260082GT	SPRING, HELICAL, RH	
24	1255700GT	YOKE,CASTING,LH,MACHINED**	1
24-	25817GT	BEARING,1.00IDX1.25ODX1.00L	
25	45074GT	WASHER,THRUST,1.5 X 3.5 X .187	2
26	1255385GT	SCREW,HHC,5/8-11X2.25,8,ZAG	12
27	1256182GT	WASHER,FLAT,5/8,F436,HRD,ZAG	12
28	88884GT	MOTOR,PISTON,30CC,4WD***	2
28-	102158GT	O-RING,.103 X 4.737,VITON, 75D	
28-	106117GT	O-RING,2-010,VITON	
28-	102155GT	BEARING,BALL DRIVE SHAFT	
28-	102159GT	SHAFT,15 TOOTH	
28-	106098GT	SEAL KIT,MOTOR,LC/KC***	
28-	27067GT	SEAL,SHAFT-SUNDSTRAND***	
28-	72290GT	SNAP RING(M46 UNITS)*	
29	824072GT	SCREW,HHC,7/16-14X1.25,ZAG to SN S65XCH-50349	4
29B	1268267GT	SCREW,HHF,7/16-14X1.25,8,ZAG from SN S65XCH-50350	4
30	1257078GT	WASHER, .469 X .768 HRD, ZAG to SN S65XCH-50349	4
31	1255710GT	WELDMENT, TIE ROD	1
31B	1283847GT	WELDMENT, TIE ROD, TRAX, 400MM (15.75 IN) WIDE TRACK	1
32	1255708GT	WELDMENT, FRONT AXLE	1
32B	1283785GT	WELDMENT,FRONT AXLE, TRAX, 400MM (15.75 IN) WIDE TRACK	1
33	1283511GT	CYLINDER, OSCILLATE S65XC	2
33-	89295GT	SEAL KIT,CYLINDER (63189)	
33-	1287506GT	VALVE, CB. CBCH-LJN@4000	

201.1 Steer End

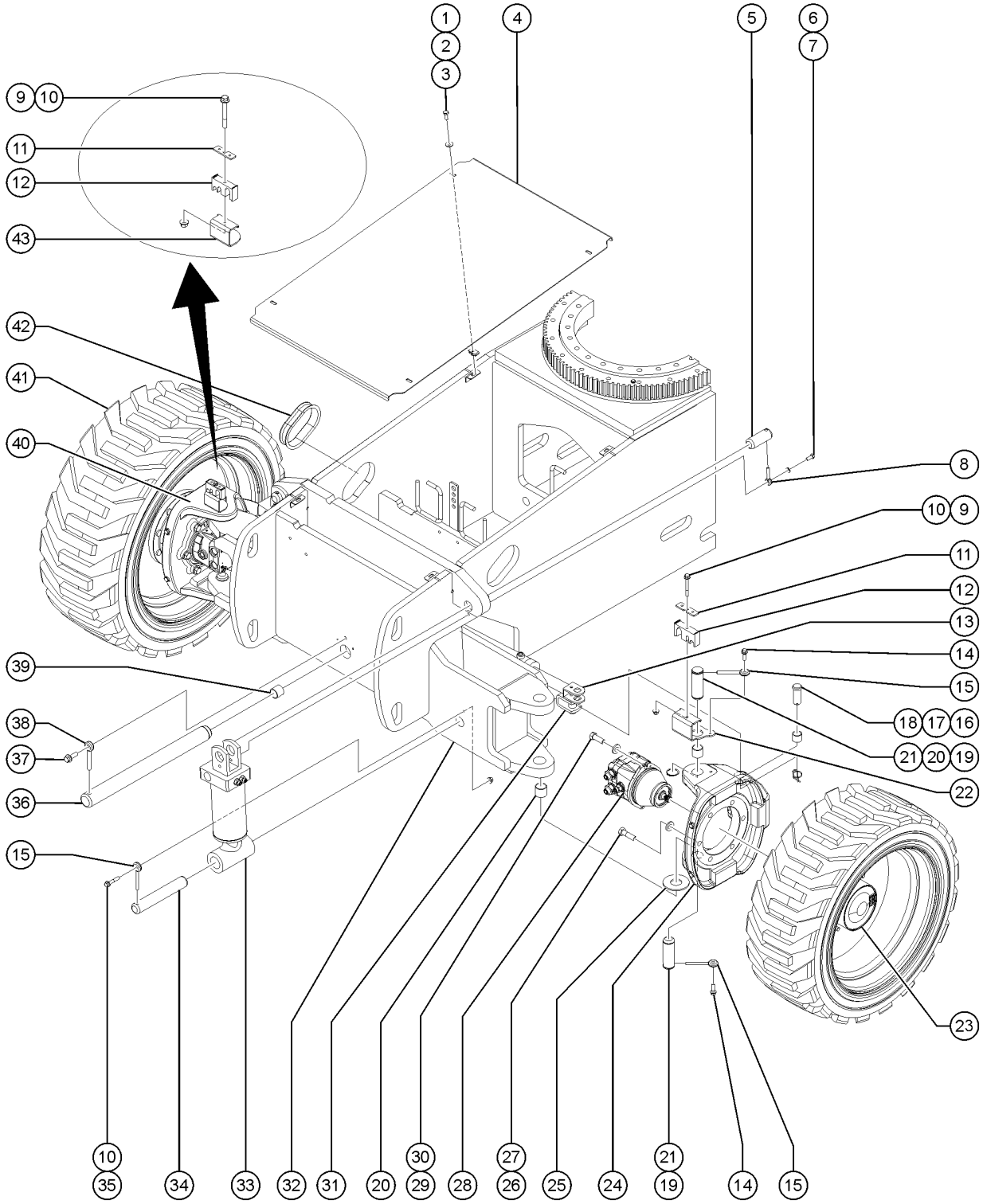

Item	Part No.	Description	Qty.
33-	74735GT	VALVE,COUNTERBALANCE	
34	77880GT	PIN,1.50DIAX9.38LG,1HOLE	2
35	1253478GT	SCREW,HHF,3/8-16X2,8,ZAG	2
36	77610GT	PIN,2.00DIAX23.13LG,CHAMFER	1
37	1253498GT	SCREW,HHF,1/2-13X1.5,8,ZAG	1
37B	8177GT	SCREW,HHC,1/2-13 X 1.5	
37B	6095GT	WASHER,FLAT,USS,1/2",Y	
37C	107578GT	GROUND STRAP,24"LONG	1
38	1256267GT	ROD END,.5 X 3.75,ZAG	1
39	42014GT	BEARING,2.00IDX2.25ODX2.00L	2
40	1255699GT	YOKE,CASTING,RH,MACHINED**	1
40-	25817GT	BEARING,1.00IDX1.25ODX1.00L	
41	77790GT	TIRE & WHEEL ASSY, RH, 355/55D625, FF RT, Foam-filled, right,	2
41B	77791GT	TIRE & WHEEL ASSY, LH, 355/55D625, FF RT, Foam-filled, left,	2
41C	106647GT	TIRE & WHEEL ASSY,RH,FOAM,NM RT, Foam-filled, Non-marking, right	2
41D	106648GT	TIRE & WHEEL ASSY,LH,FOAM,NM RT, Foam-filled, Non-marking, left	2
41E	1288403GT	ASSEMBLY, WHEEL/TIRE,HF,20PR Turf, Hi-flotation, air-filled	4
41E-	94333GT	WHEEL,22.5X14.00*** for 1288403	
41E-	1286372GT	TIRE,41/18LLX22.5,20PR,TURF for 1288403	
41F	1288405GT	TIRE/WHEEL ASSY,HF W/SEALANT Turf, Hi-flotation, air-filled with sealant	4
42	53386GT	GUARD, HOSE PROTECTOR	2
43	1255704GT	BRACKET,HOSE ROUTING,AXLE RH	1

202.1 Non-steer End

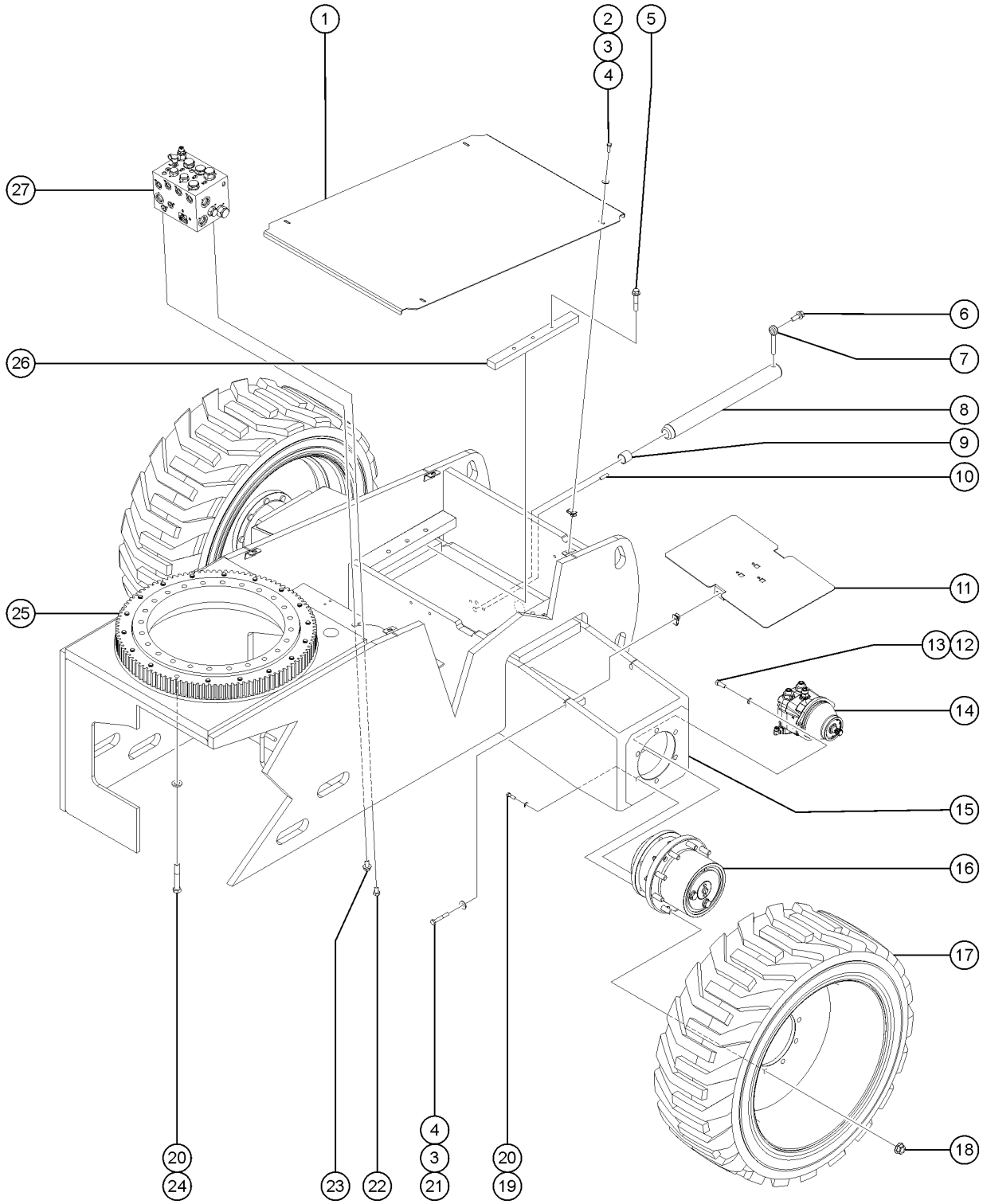

202.1 Non-steer End

Item	Part No.	Description	Qty.
1	1255703GT	COVER,DRIVE CHASSIS does not include decals, refer to section 1	1
2	824059GT	SCREW, HHC, 1/4-20 X .75, 8, ZAG	4
3	824113GT	WASHER,FLAT,USS,1/4,ZAG	8
4	56912GT	SPRING CLIP,1/4-20,.025-.15X.54,ZAG	8
5	1255802GT	SCREW,HHF,1/2-13X2.5,8,ZAG	3
6	1253498GT	SCREW,HHF,1/2-13X1.5,8,ZAG	1
7	1256267GT	ROD END,.5 X 3.75,ZAG	1
8	77950GT	PIN,2.00DIAX20.88LG,CHAMFER	1
9	42014GT	BEARING,2.00IDX2.25ODX2.00L	2
10	128049GT	PIN, ROLL, .375 X 1.5***	8
11	1255711GT	COVER, REAR AXLE	2
12	824072GT	SCREW,HHC,7/16-14X1.25,ZAG to SN S65XCH-50349	4
12B	1268267GT	SCREW,HHF,7/16-14X1.25,8,ZAG from SN S65XCH-50350	4
13	1257078GT	WASHER, .469 X .768 HRD, ZAG to SN S65XCH-50349	4
14	88884GT	MOTOR,PISTON,30CC,4WD*** 4WD models	2
14-	102158GT	O-RING,.103 X 4.737,VITON, 75D for 88884	
14-	106117GT	O-RING,2-010,VITON for 88884	
14-	102155GT	BEARING,BALL DRIVE SHAFT for 88884	
14-	102159GT	SHAFT,15 TOOTH for 88884	
14-	106098GT	SEAL KIT,MOTOR,LC/KC*** for 88884	
14-	27067GT	SEAL,SHAFT-SUNDSTRAND*** for 88884	
14-	72290GT	SNAP RING(M46 UNITS)* for 88884	
15	1283533GT	WELDMENT, REAR AXLE	1
15B	1283783GT	WELDMENT,REAR AXLE,TRAX, 400MM (15.75 IN) WIDE TRACK	1
16		WHEEL DRIVE 57.5:1 4WD PN 231612 REPLACED OMNIGEAR WHEEL DRIVE PN 229702	2
16-	139965GT	WHEEL STUD,5/8-18,OMNI*** for 229702	
16-	139966GT	ROD,DISCONNECT,OMNI*** for 229702	
16-	139967GT	CAP,DISENGAGE,OMNI*** for 229702	

202.1 Non-steer End

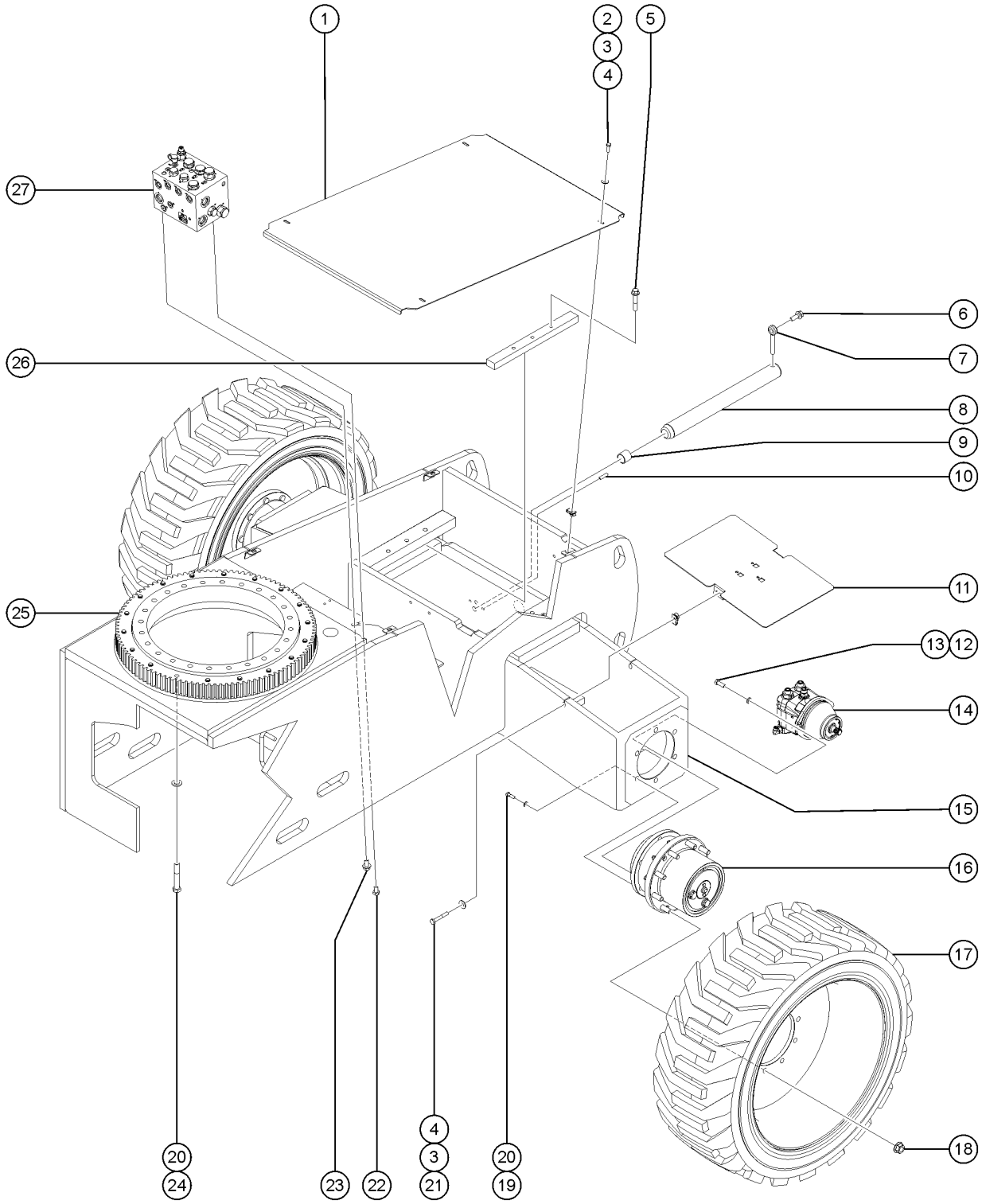

Item	Part No.	Description	Qty.
16-	139968GT	O-RING,END COVER,OMNI*** for 229702	
16-	139969GT	LINING KIT,BRAKE,OMNI*** for 229702	
16-	139970GT	SEAL KIT,BRAKE,OMNI*** for 229702	
16-	139971GT	BEARING KIT,OMNI*** for 229702	
16-	139972GT	SEAL KIT,GEARBOX,OMNI*** for 229702	
16-	147033GT	O-RING,PIPE PLUG KIT,OMNI*** for 229702	
16-	147034GT	PIPE PLUG KIT,OMNI*** for 229702	
16-	1260084GT	END CAP, WHEEL DRIVE for 229702	
16B	88887GT	WHEEL DRIVE 56:1 2WD	2
16B-	102126GT	SEAL KIT,DRIVE HUB (88887) for 88887	
16B-	102131GT	DISCONNECT KIT (88887) for 88887	
16B-	215642GT	BRAKE KIT (88886)*** for 88887	
16B-	102163GT	RING,RETAINING*** for 88887	
16B-	215340GT	LOCKRING, RR for 88887	
16B-	102167GT	SHAFT,INPUT DRIVE HUB for 88887	
16B-	102162GT	LUG,STUD/WHEEL (88887) for 88887	
16B-	102516GT	RING,RETAINING,INTERNAL for 88887	
16B-	102126GT	SEAL KIT,DRIVE HUB (88887)	1
16B-	1274613GT	HUB SCREW for 88887	
16C	231612GT	WHEEL DRIVE,W/BRAKE 4WD	2
16C-	102158GT	O-RING,.103 X 4.737,VITON, 75D	
16C-	106117GT	O-RING,2-010,VITON	
16C-	230849GT	WHEEL STUD,5/8-18X67MM	
16C-	139966GT	ROD,DISCONNECT,OMNI***	
16C-	139967GT	CAP,DISENGAGE,OMNI***	
16C-	139968GT	O-RING,END COVER,OMNI***	
16C-	139969GT	LINING KIT,BRAKE,OMNI***	
16C-	139970GT	SEAL KIT,BRAKE,OMNI***	

202.1 Non-steer End

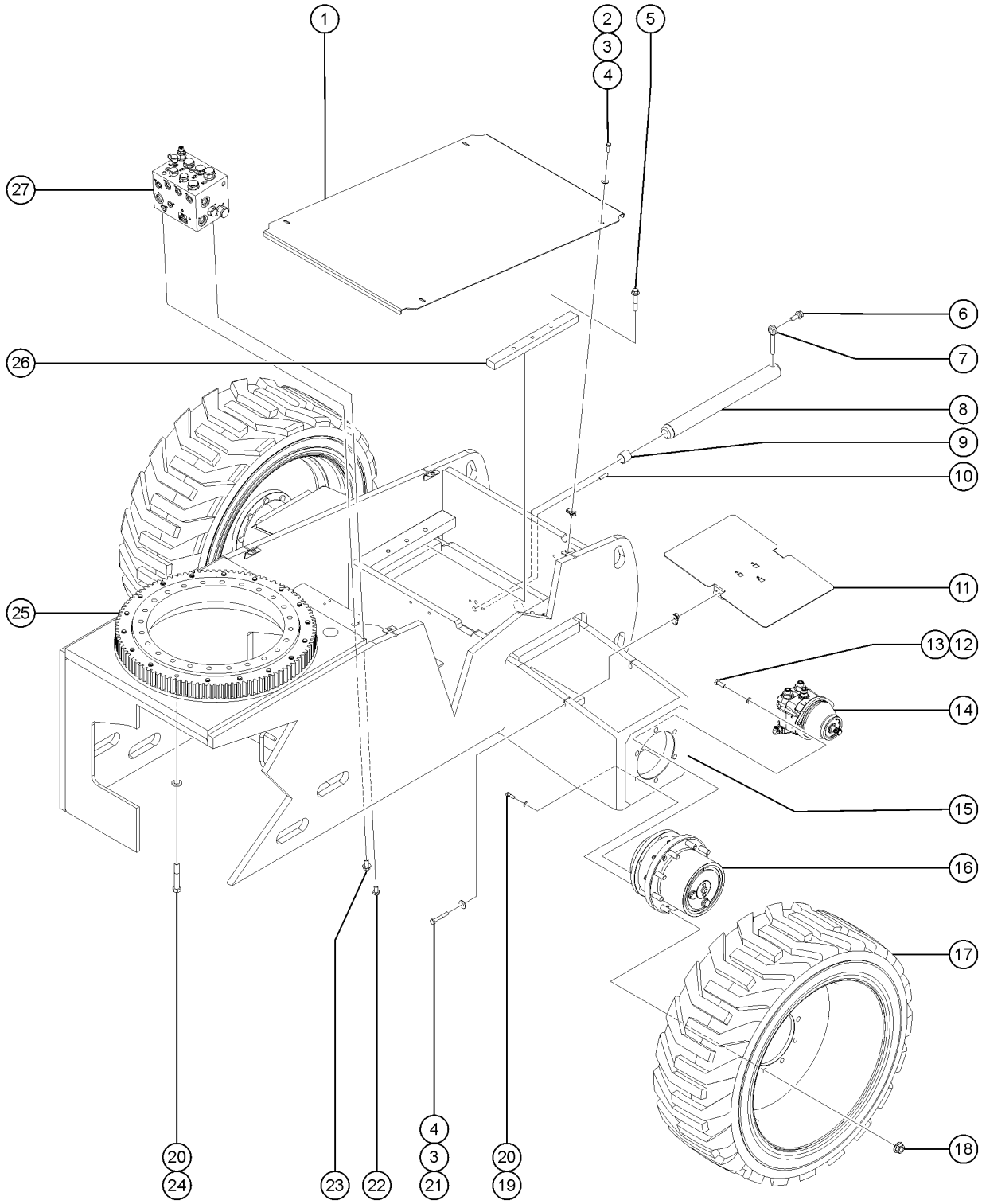

Item	Part No.	Description	Qty.
16C-	139971GT	BEARING KIT,OMNI***	
16C-	139972GT	SEAL KIT,GEARBOX,OMNI***	
16C-	147033GT	O-RING,PIPE PLUG KIT,OMNI***	
16C-	147034GT	PIPE PLUG KIT,OMNI***	
16C-	1260082GT	SPRING, HELICAL, RH	
17	162216GT	TIRE & WHEEL ASSY,FOAM,RH RT, Foam-filled, right,	2
17B	162217GT	TIRE & WHEEL ASSY,FOAM,LH RT, Foam-filled, left,	2
17C	106647GT	TIRE & WHEEL ASSY,RH,FOAM,NM RT, Foam-filled, Non-marking, right	1
17D	106648GT	TIRE & WHEEL ASSY,LH,FOAM,NM RT, Foam-filled, Non-marking, left	1
17E	1288403GT	ASSEMBLY, WHEEL/TIRE,HF,20PR Turf, Hi-flotation, air-filled	2
17E-	94333GT	WHEEL,22.5X14.00*** for 1288403	
17E-	1286372GT	TIRE,41/18LLX22.5,20PR,TURF for 1288403	
17F	1288405GT	TIRE/WHEEL ASSY,HF W/SEALANT Turf, Hi-flotation, air-filled with sealant	2
18	77674GT	NUT,HEX,FLANGE 5/8-18,GRD 8 ZI	36
19	1255385GT	SCREW,HHC,5/8-11X2.25,8,ZAG	12
20	1256182GT	WASHER,FLAT,5/8,F436,HRD,ZAG	30
21	824063GT	SCREW,HHC,1/4-20X1.75,8,ZAG	4
22	1257453GT	SCREW,HHC,1/2-13X.875,8,ZAG	1
23	237830GT	SCREW,HHF,1/2-13X1,8,ZAG	1
24	1256170GT	SCREW,HHC,5/8-11X4,8,ZAG	18
25	63468GT	BEARING,TURNTABLE ROTATION	1
25-	227785GT	BEARING TURNTABLE SEAL***	
26	1255702GT	BAR,AXLE ROTATION STOP,OSC.	1
27		REF. MANIFOLD, TRACTION (refer to 402.1)	1

203.1 Oscillate Valve

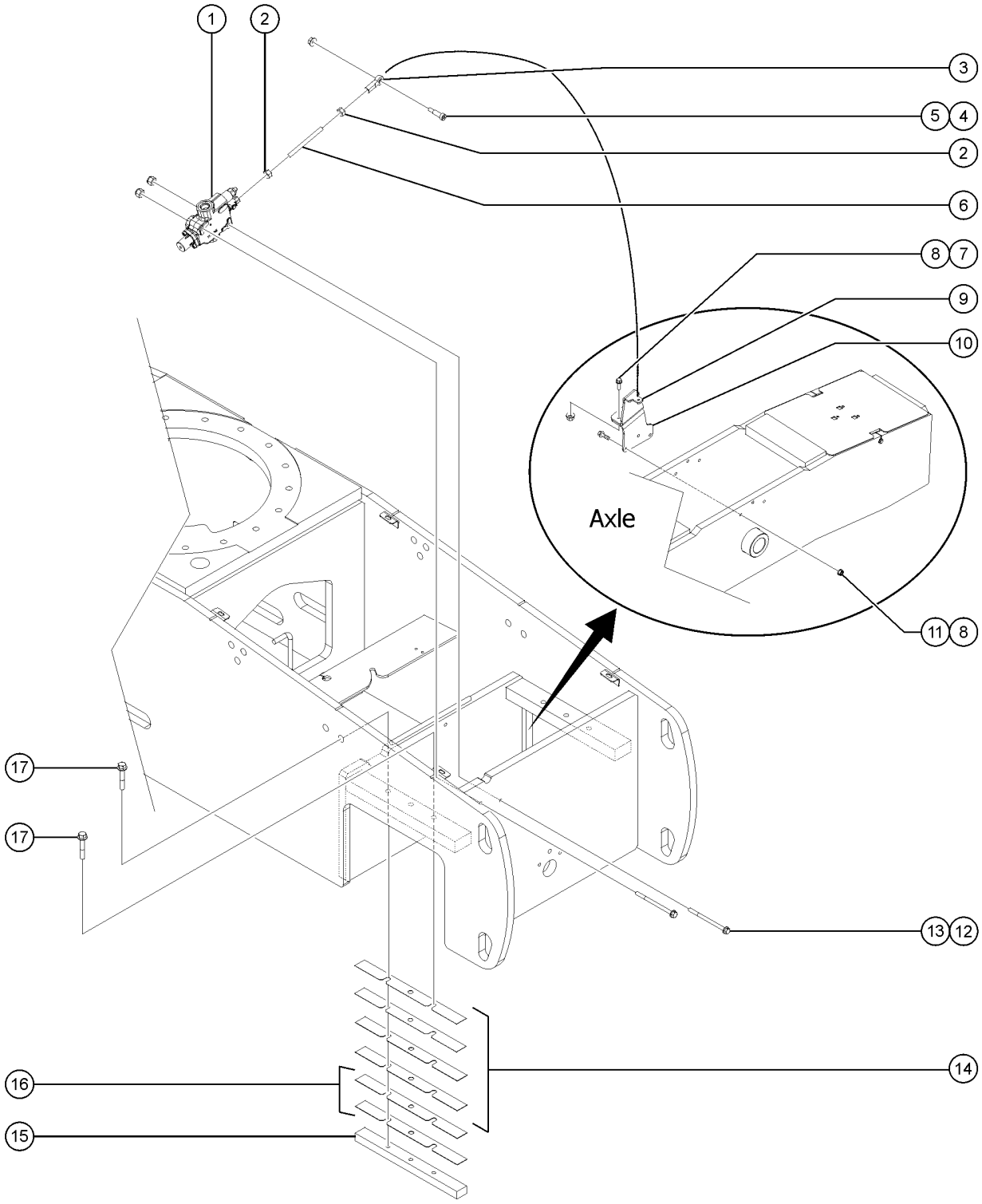

Item	Part No.	Description	Qty.
-	1327902GT	KIT, CLEVIS, VALVE/MOTOR SPOOL (includes items no 1,2,3,4,5,6,7,8,9,10,11,12,13,14,15,16,17)	1
1	1288398GT	VALVE, MOTOR SPOOL, 3 POS 4 WAY does not include decals, refer to section 1	1
2	824041GT	NUT, 1/4-28, 8, ZAG	2
3	81691GT	ROD END,BALL JOINT 1/4-28	1
4	1257076GT	BOLT,SHS,1/4-28X4,ZAG	1
5	1283004GT	NUT,NYLOCK FLG,10-24,A,ZAG	1
6	1283537GT	ROD, THREADED, 1/4X28X2.25	1
7	824091GT	SCREW, HHF, 3/8-16 X 1.25, 8, ZAG	2
8	1274322GT	NUT,NYLOCK FLG,3/8-16,F,ZAG	5
9	1288372GT	FORMING, TOP, OSCILLATE VALVE BRACKET	1
10	1288373GT	FORMING, BOTTOM, OSCILLATE VALVE BRACKET	1
11	1253478GT	SCREW,HHF,3/8-16X2,8,ZAG	3
12	1257419GT	SCREW,HHF,M8-1.25X80,DIN6921,10.9,ZAB	2
13	1283022GT	NUT,NYLOCK,M8-1.25,DIN985,10,ZAB	2
14	81609GT	SHIM,AXLE ROTATION STOP,22G 4WD models	4
15	1255702GT	BAR,AXLE ROTATION STOP,OSC. for 88884	1
16	81610GT	SHIM,AXLE ROTATION STOP,16G for 88884	2
17	1255802GT	SCREW,HHF,1/2-13X2.5,8,ZAG for 88884	3

204.1 TraX Option Steer End (to SN S65XCH-50392)

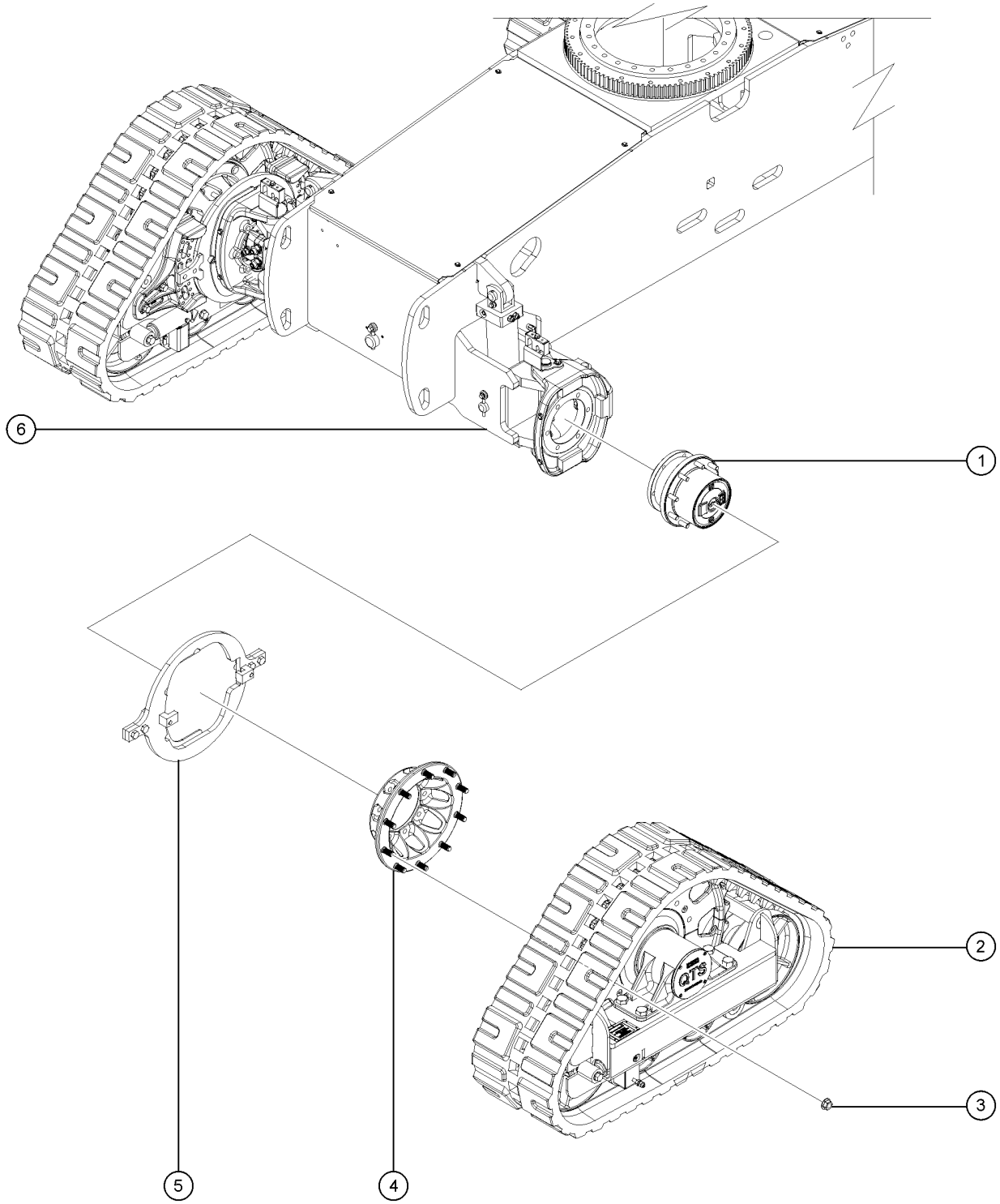

Item	Part No.	Description	Qty.
1	229817GT	WHEEL DRIVE 56:1	2
1-	102157GT	O-RING,.070 X .239,VITON 75D	
1-	102162GT	LUG,STUD/WHEEL (88887)	
1-	102131GT	DISCONNECT KIT (88887)	
1-	229818GT	SEAL KIT, DRIVE HUB	
1-	215340GT	LOCKRING, RR	
1-	102516GT	RING,RETAINING,INTERNAL	
1-	215642GT	BRAKE KIT (88886)***	
1-	229931GT	SEAL,LIP	
1-	102158GT	O-RING,.103 X 4.737,VITON, 75D	
1-	102166GT	VALVE,CHECK,30 PSI	
1-	102167GT	SHAFT,INPUT DRIVE HUB	
1-	106098GT	SEAL KIT,MOTOR,LC/KC***	
1-	27067GT	SEAL,SHAFT-SUNDSTRAND***	
1-	77674GT	NUT,HEX,FLANGE 5/8-18,GRD 8 ZI	
1-	88884GT	MOTOR,PISTON,30CC,4WD***	
2		ASSEMBLY,TRAX UNIT,LEFT,400MM (15.75 IN) WIDE TRACK (Left) (Not available to order. Order lower level parts)	1
2B		ASSEMBLY,TRAX UNIT,RIGHT,400MM (15.75 IN) WIDE TRACK (Right) (Not available to order. Order lower level parts)	1
3	77674GT	NUT,HEX,FLANGE 5/8-18,GRD 8 ZI	20
4	139002GT	SPACER, 9 BOLT	2
4-	139140GT	STUD, 3/4-16 UNF X 2-1/2 LG for 139002	
5	139001GT	ROTATIONAL LIMITER FRONT LEFT (Left)	1
5B	139000GT	ROTATIONAL LIMITER FRONT RIGHT (Right)	1
6	1283785GT	WELDMENT,FRONT AXLE, TRAX, 400MM (15.75 IN) WIDE TRACK	1

205.1 TraX Option Non-steer End (to SN S65XCH-50392)

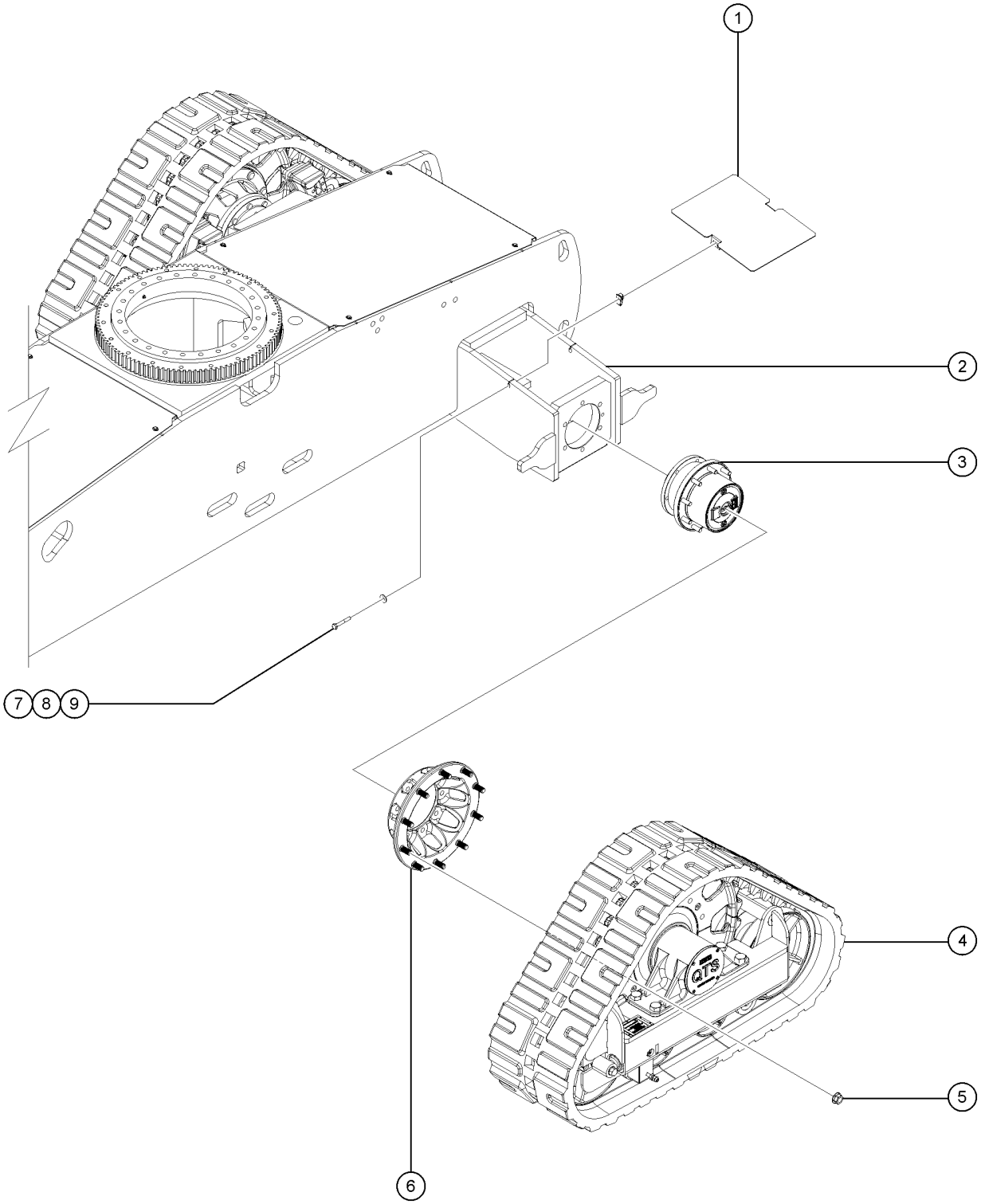

205.1 TraX Option Non-steer End (to SN S65XCH-50392)

Item	Part No.	Description	Qty.
1	1255714GT	COVER, REAR AXLE	2
2	1283783GT	WELDMENT,REAR AXLE,TRAX, 400MM (15.75 IN) WIDE TRACK	1
3	229817GT	WHEEL DRIVE 56:1	2
3-	102157GT	O-RING,.070 X .239,VITON 75D	
3-	102162GT	LUG,STUD/WHEEL (88887)	
3-	102131GT	DISCONNECT KIT (88887)	
3-	229818GT	SEAL KIT, DRIVE HUB	
3-	215340GT	LOCKRING, RR	
3-	102516GT	RING,RETAINING,INTERNAL	
3-	215642GT	BRAKE KIT (88886)***	
3-	229931GT	SEAL,LIP	
3-	102158GT	O-RING,.103 X 4.737,VITON, 75D	
3-	102166GT	VALVE,CHECK,30 PSI	
3-	102167GT	SHAFT,INPUT DRIVE HUB	
3-	106098GT	SEAL KIT,MOTOR,LC/KC***	
3-	27067GT	SEAL,SHAFT-SUNDSTRAND***	
3-	77674GT	NUT,HEX,FLANGE 5/8-18,GRD 8 ZI	
3-	88884GT	MOTOR,PISTON,30CC,4WD***	
4		ASSEMBLY,TRAX UNIT,LEFT,400MM (15.75 IN) WIDE TRACK (left) (Not available to order. Order lower level parts)	1
4B		ASSEMBLY,TRAX UNIT,RIGHT,400MM (15.75 IN) WIDE TRACK (Not available to order. Order lower level parts)	1
5	77674GT	NUT,HEX,FLANGE 5/8-18,GRD 8 ZI	20
6	139002GT	SPACER, 9 BOLT	2
6-	139140GT	STUD, 3/4-16 UNF X 2-1/2 LG for 139002	
7	1255642GT	SCREW,HHC,5/16-18X1.75,8,ZAG	
8	825358GT	WASHER,FLAT,5/16,USS,ZAG	
9	36456GT	SPRING CLIP,5/16-18,.025-.15X.	

206.1 TraX Option Components (to SN S65XCH-50392)

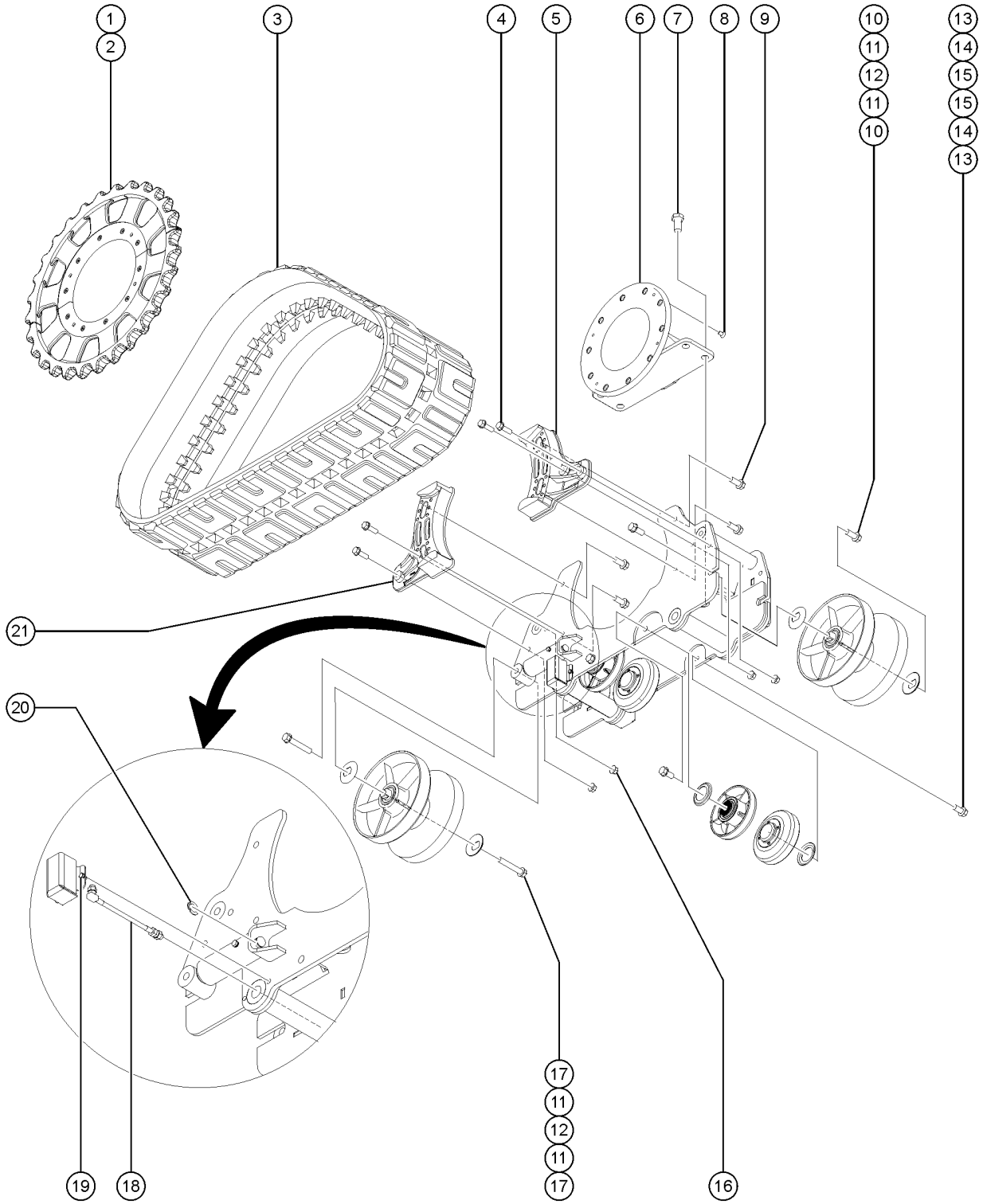

Item	Part No.	Description	Qty.
A	128949GT	FITTING, 1/4"NPT STR ZERK	1
1	128922GT	SPROCKET, MACH. HALF RIGHT	1
2	128923GT	SPROCKET, MACH. HALF LEFT	1
3	1287242GT	TRACK,RUBBER,400MM (15.75 IN) WIDE	1
4	111155GT	SCREW,FLANGE,HHC,5/8-11X2,GR8	4
5	128925GT	CAST, LIMITER STOP BRKT R	1
6	128928GT	HUB ASSEMBLY	1
6-	1313693GT	SPINDLE, MAIN	1
6-	1313694GT	BEARING, TAPERED ROLLER	1
6-	1313695GT	HUB, MAIN CAST	1
6-	1313696GT	NUT, SPANNER	1
6-	1313697GT	SEAL, HUB	1
6-	1313698GT	COVER, DUST, AWP	1
6-	1313699GT	O-RING	1
6-	1313700GT	SNAP RING	1
6-	1313701GT	PIN, PLUNGER	1
6-	1313702GT	SPRING, COMPRESSION, .53ID X 1.94 LONG	1
6-	1313703GT	PIN, SPRING 3/16 DIA X .625 LONG	2
6-	1313704GT	O-RING .484 ID X .139 CROSS SECTION	2
6-	1313705GT	COVER, BRAKE RELEASE	1
6-	1313706GT	O-RING, 1.00 DIA X .094 CROSS SECTION	1
6-	1313707GT	SPACER, RUBBER	1
6-	1313708GT	SCREW, HFS, 1/4-20 X .38, GR8, YZ	2
6-	1313709GT	SCREW, SHCS, 5/16-18 X .75, GR8, YZ	4
7	128913GT	BOLT,HHC,1-14X2.0"GR8 PLT	4
8	128914GT	SCREW, FHSC, 1/2-13X1.00	4
9	128912GT	BOLT,FLANGE,5/8-11X1.5"GR8 PLT	4
10	128910GT	BOLT,FLANGE,3/4-10X1.75GR8 PLT	2

206.1 TraX Option Components (to SN S65XCH-50392)

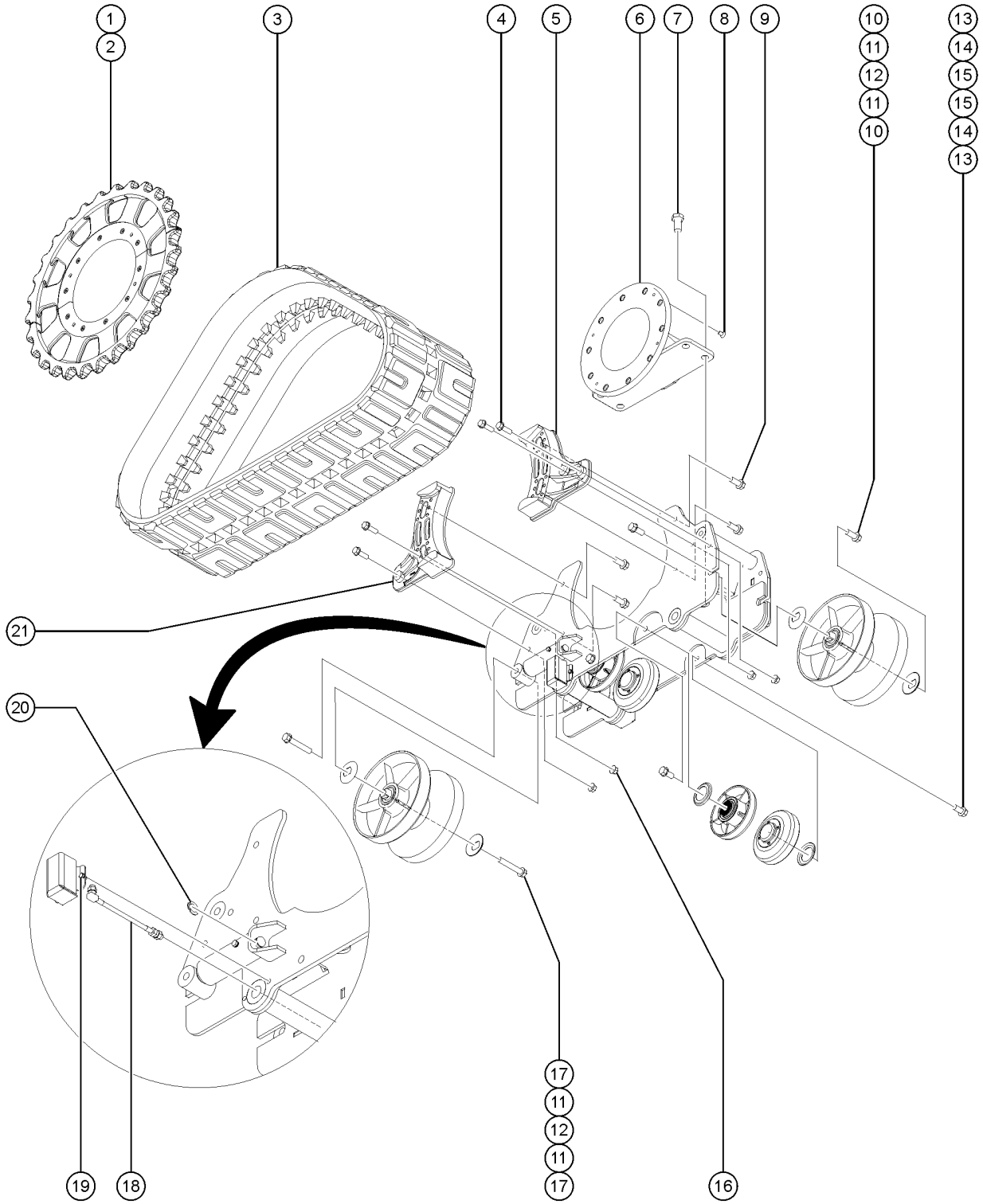

Item	Part No.	Description	Qty.
11	128920GT	COVER, DUST	4
12	128917GT	END BOGEY	2
13	128909GT	BOLT,FLANGE,3/4-10X1.5"GR8 PLT	4
14	128921GT	GUARD, SEAL	4
15	128918GT	SPLIT BOGEY	4
16	128916GT	NUT,FLANGE,LOCK,5/8-11GR8 PLT	4
17	128911GT	BOLT,FLANGE,3/4-10X4.5"GR8 PLT	2
18	128927GT	HYD. HOSE ASSEMBLY 3000 PSI	1
19	128955GT	BOLT,FLANGE,5/16-18X.50 GR5	4
20	128919GT	SNAP RING	2
21	128924GT	CAST, LIMITER STOP BRKT L	1

207.1 TraX Option NGT Steer End (from SN S65XCH-50393)

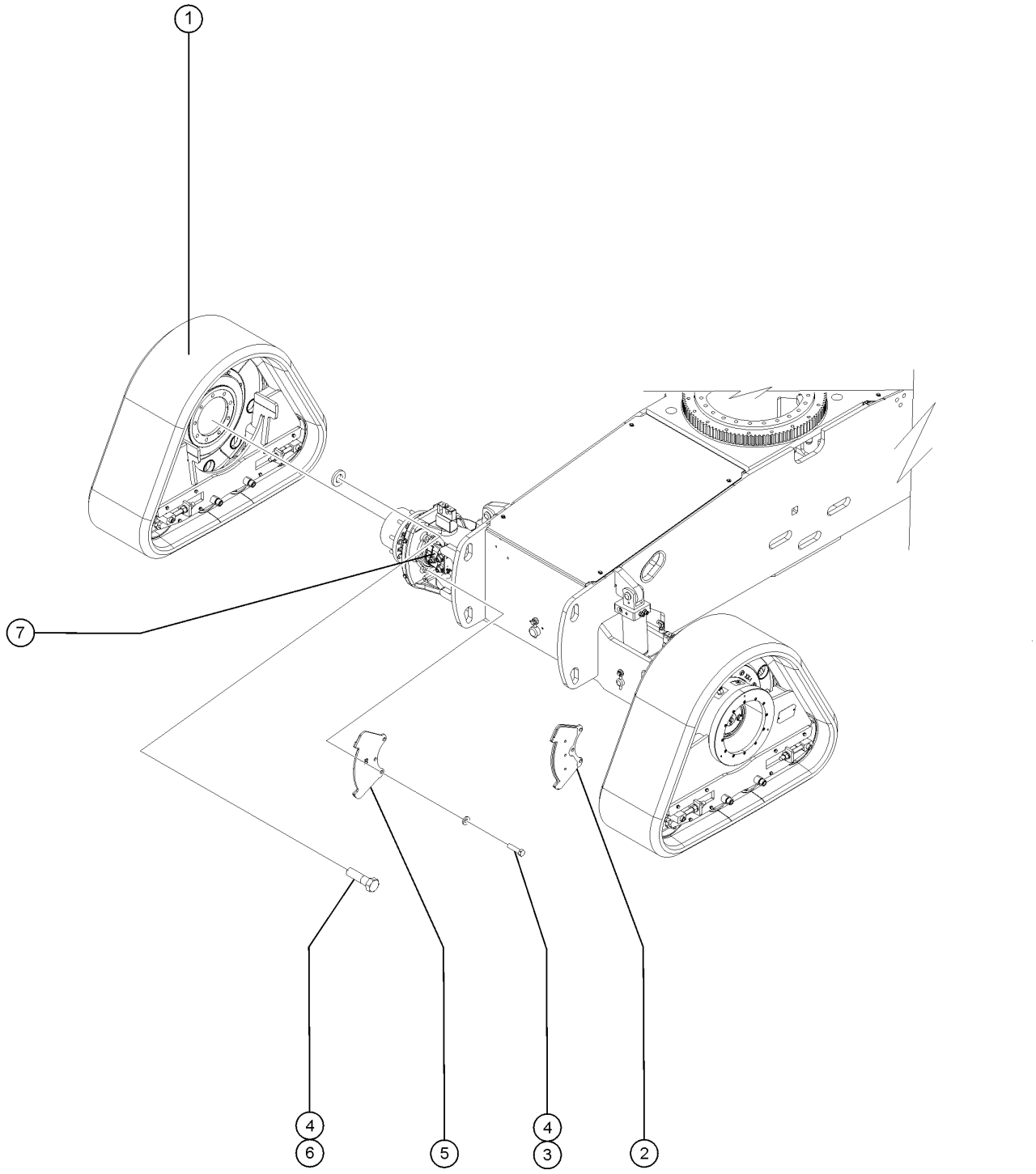

207.1 TraX Option NGT Steer End (from SN S65XCH-50393)

Item	*Part No.*	*Description*	*Qty.*
1	1321090GT	ASSEMBLY, LARGE TRAX Refer 209.1	
2	1321340GT	ROTATIONAL LIMITER FRONT LEFT	1
3	51131GT	SCREW,HHC,5/8-11 X 2.5	6
4	1256182GT	WASHER,FLAT,5/8,F436,HRD,ZAG	12
5	1321341GT	ROTATIONAL LIMITER FRONT RIGHT	1
6	1255385GT	SCREW,HHC,5/8-11X2.25,8,ZAG	6
7	1301743GT	MOTOR, PISTON, 45CC, 15T	2
7-	106117GT	O-RING,2-010,VITON	
7-	106118GT	O-RING,2-157,VITON***	
7-	1303889GT	Overhaul kit for KC motor	

208.1 TraX Option NGT Non Steer End (from SN S65XCH-50393)

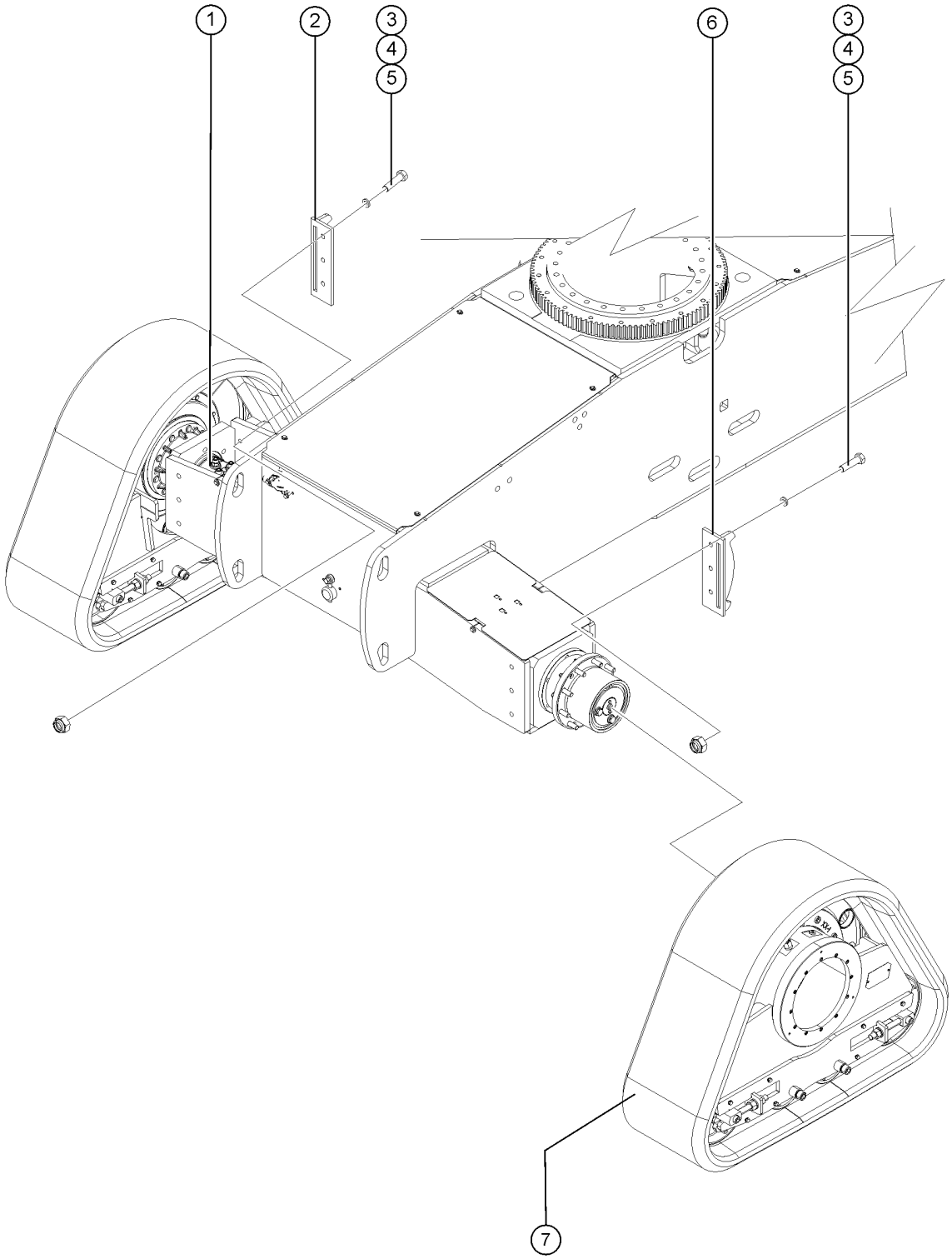

208.1 TraX Option NGT Non Steer End (from SN S65XCH-50393)

Item	*Part No.*	*Description*	*Qty.*
1	1301743GT	MOTOR, PISTON, 45CC, 15T	2
1-	1303889GT	Overhaul kit for KC motor	
1-	106118GT	O-RING,2-157,VITON***	
1-	106117GT	O-RING,2-010,VITON	
2	1321343GT	ROTATIONAL LIMITER REAR RIGHT	1
3	825348GT	WASHER,FLAT,M16,DIN6916,HRD,ZAB	6
4	1268274GT	SCREW,HHC,M16X60,DIN933,10.9,ZAB	6
5	1311146GT	NUT,NYLOCK,M16-2.0,DIN985,10,ZAB	6
6	1321342GT	ROTATIONAL LIMITER REAR LEFT	
7	1321090GT	ASSEMBLY, LARGE TRAX Refer 209.1	

209.1 TraX Option NGT Components (from SN S65XCH-50393)

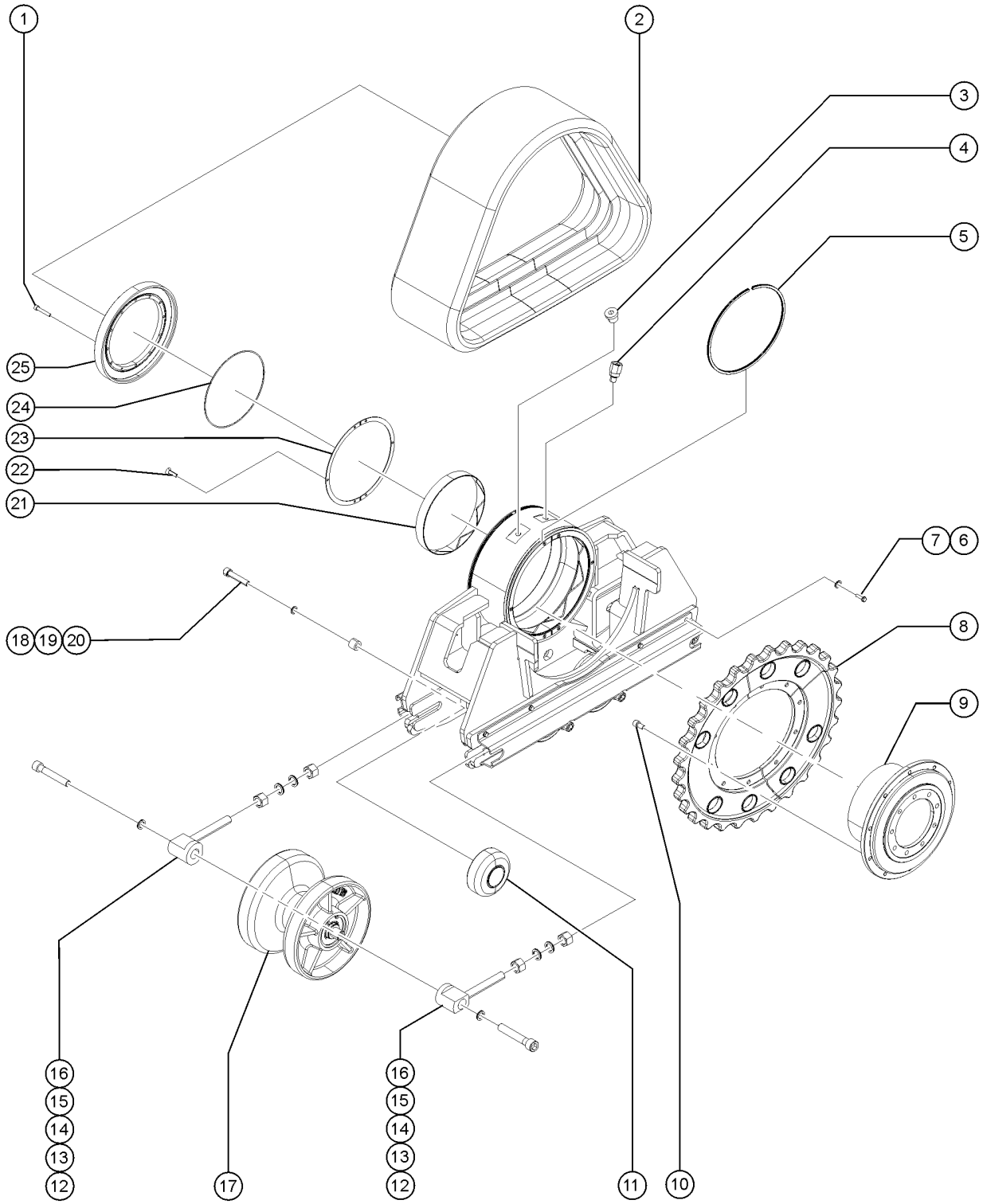

209.1 TraX Option NGT Components (from SN S65XCH-50393)

Item	Part No.	Description	Qty.
1	1321007GT	SCREW,SHC,M8-1.25X50,DIN912,12.9,ZAB	12
2	1321056GT	TRACK, RUBBER, LARGE	1
3	1321051GT	BLANKING PLUG M16x1.5 WITH O-RING	1
4	1321049GT	ZERK,GREASE,M16x1.5	1
5	1321058GT	SEAL, TRAX	2
6	824135GT	SCREW,HHC,M8-1.25X20,DIN933,10.9,ZAB	16
7	824144GT	WASHER,FLAT,M8,DIN125,ZAB	16
8	1321059GT	SPROCKET, LARGE TRAX	1
9	1321054GT	HUB ADAPTER, TRAX	1
10	1311093GT	SCREW,SHC,M16-1.5X30,DIN912,12.9,ZAB	10
11	1321050GT	ROLLER, LARGE TRAX	4
12	1321057GT	TENSIONER, TRAX	4
13	1311092GT	SCREW,SHC,M16-2.0X100,DIN912,12.9,ZAB	4
14	1321122GT	WASHER,NORD LOCK,M16	4
15	1263237GT	NUT,TL,M20-2.5,DIN980,10,ZAB	8
16	231510GT	WASHER,FLAT,M20,DIN6916,HRD,ZAB	8
17	1321048GT	IDLER, TRAX	2
18	1321008GT	SCREW,SHC,M20-2.5X100, DIN912,12.9,ZAB	4
19	1321053GT	SPACER, TRAX	4
20	1321009GT	WASHER,NORD LOCK, M20	4
21	1321046GT	BEARING, TRAX	2
22	1321010GT	SCREW,FHS,M5-0.8X20,ISO10642,10.9,ZAB	12
23	1321045GT	HALF THRUST WASHER, TRAX	4
24	1321055GT	O RING, TRAX	1
25	1321052GT	BEARING RETAINER, TRAX	1

301.1 Tank Side - View 1

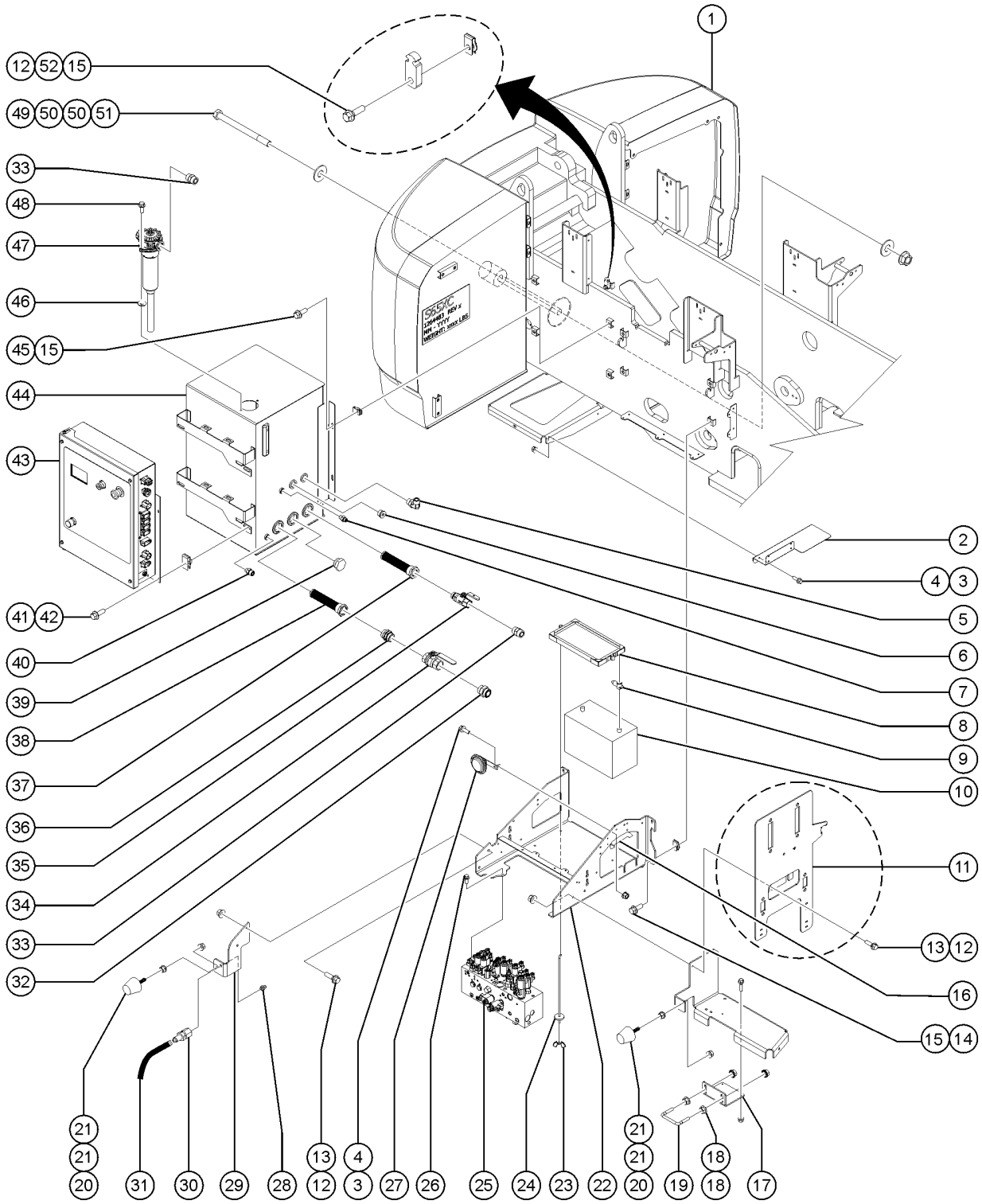

301.1 Tank Side - View 1

Item	Part No.	Description	Qty.
A	1289561GT	BRACKET, TELEMATICS	
B	1289520GT	MODULE, TELEMATICS, ZTR, M7, NORTH AMERICA to SN S65XCH-50605	
C	1313592GT	MODULE, ASSY,TELEMATICS, ZTR, M7, GLOBAL from SN S65XCH-50606	
D	1289521GT	MODULE, TELEMATICS, ZTR, M7, EMEA/APAC	
1	1264483GT	COUNTERWEIGHT, S65XC S-65 XC	1
1B	1276412GT	COUNTERWEIGHT, S60XC S-60 XC	1
2	1283547GT	FORMING, HARNESS SUPPORT, S60/65XC	1
3	824078GT	SCREW,HHF,1/4-20X.75,8,ZAG	3
4	1277924GT	NUT,NYLOCK FLG,1/4-20,F,ZAG	3
5	48959GT	FITTING,ELBOW,90D,520220-12	1
5-	48878GT	ELBOW,90D,520220-16-12	
6	59371GT	PLUG, HEX SOCKET, 090109B-8*	1
7	48912GT	CONN,520120-4-6***	1
8	30144GT	BATTERY HOLD DOWN,GROUP 31	1
9	8910GT	BOOT,CABLE TERM,MED.RED,4/0	1
10	1303581GT	BATTERY, 12V, 950CCA, FLA	1
11		Ref. ECU BRACKET (refer to 302.1)	
12	824091GT	SCREW, HHF, 3/8-16 X 1.25, 8, ZAG	7
13	1274322GT	NUT,NYLOCK FLG,3/8-16,F,ZAG	5
14	824090GT	SCREW,HHF,3/8-16X1,8,ZAG to SN S65XCH-44999	6
14B	824090GT	SCREW,HHF,3/8-16X1,8,ZAG from SN S65XCH-45000	4
15	29868GT	SPRING CLIP,3/8-16,.05-.20X.73,ZAG	10
16	1697GT	TRIMLOCK,BLACK,3/16 6 inches	1 inches
17	1299532GT	FORMING,MOUNT,LATCH	1
18	1261724GT	NUT,SERRATED,1/2-13,8,ZAG	4
19	1259855GT	UBOLT, 0.4724 IN D X 4.0 IN L	1
20	1261277GT	RUBBER BUMPER, 1.25 X 1.25 IN	2

301.1 Tank Side - View 1

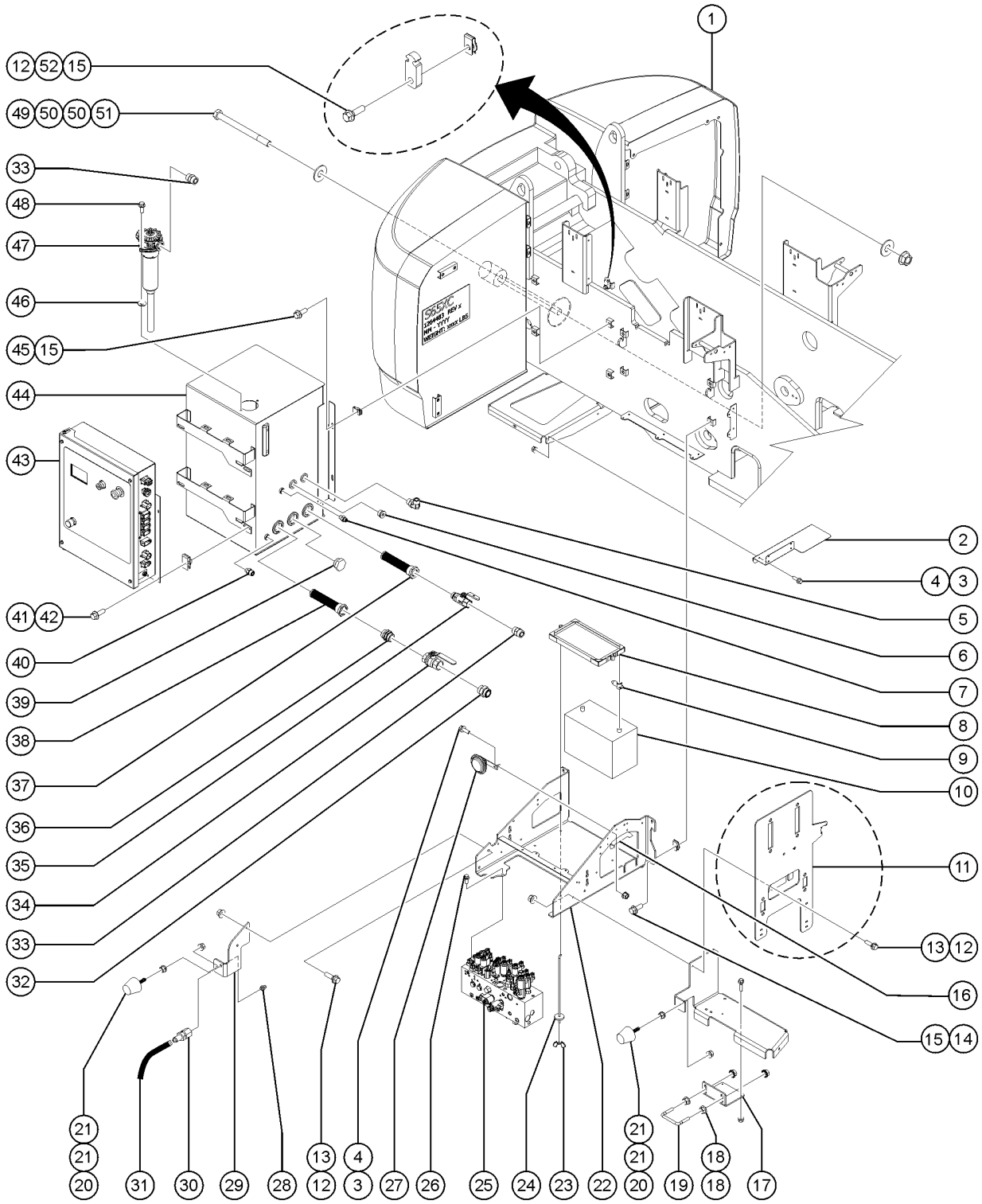

301.1 Tank Side - View 1

Item	Part No.	Description	Qty.
21	1274167GT	NUT,NYLOCK FLG,5/16-18,F,ZAG	4
22	1309567GT	WELDMENT, BATT/MANIF TRAY, S60/65XC	1
23	8170GT	NUT,WING,1/4-20	2
24	45708GT	HOOK-BATT HOLD DOWN 10"LG	2
25		Ref. FUNCTION MANIFOLD (refer to 401.1)	
26	1253498GT	SCREW,HHF,1/2-13X1.5,8,ZAG	2
27	81578GT	HORN,12VDC,SPADE TERMINALS***	1
28	94643GT	ZERK,GREASE,5/16-24,STRAIT	1
28-	28646GT	ZERK,GREASE,1/8 NPT	1
29	1253825GT	FORMING, BRACKET, COVER STOP	1
30	48885GT	CONNECTOR,BULKHEAD,FEMALE-4	1
31	49176-8638GT	HOSE ASSY,-4,STR FEM,90 FEM (grease hose)	1
32	75654GT	CONN,520120-20	1
33	48984GT	CONN, 520120-16	2
34	101494GT	VALVE,BALL,FSAE-20,FSAE-20	1
35	48996GT	VALVE, BALL, 16 MSAE-16 FSAE	1
36	61263GT	UNION,STR.THREAD 20	1
37	101490GT	STRAINER,16 SAE F/24 SAE M	1
38	101491GT	STRAINER,20 SAE F/24 SAE M***	1
39	1282197GT	PLUG,SAE-24,EXTERNAL HEX	1
40	48943GT	FITTING,CONN,520120-8-6	1
41	1256855	SCREW,HHF,1/4-20X.625,8,ZAG	4
42	56912GT	SPRING CLIP,1/4-20,.025-.15X.54,ZAG	4
43		Ref. GROUND CONTROL BOX (refer to 305.1 and 306.1)	1
44	1276519GT	ASSY,HYDRAULIC TANK,S60/65XC (includes items 5-7, 14 and 33-46)	1
44-	1276459GT	TANK, HYDRAULIC 40 GAL (includes items 38 and 39)	
45	825354GT	SCREW,HHF-S,3/8-16X7/8,8.2,ZAG	4
46	824144GT	WASHER,FLAT,M8,DIN125,ZAB from SN S65XCH-45000	2

301.1 Tank Side - View 1

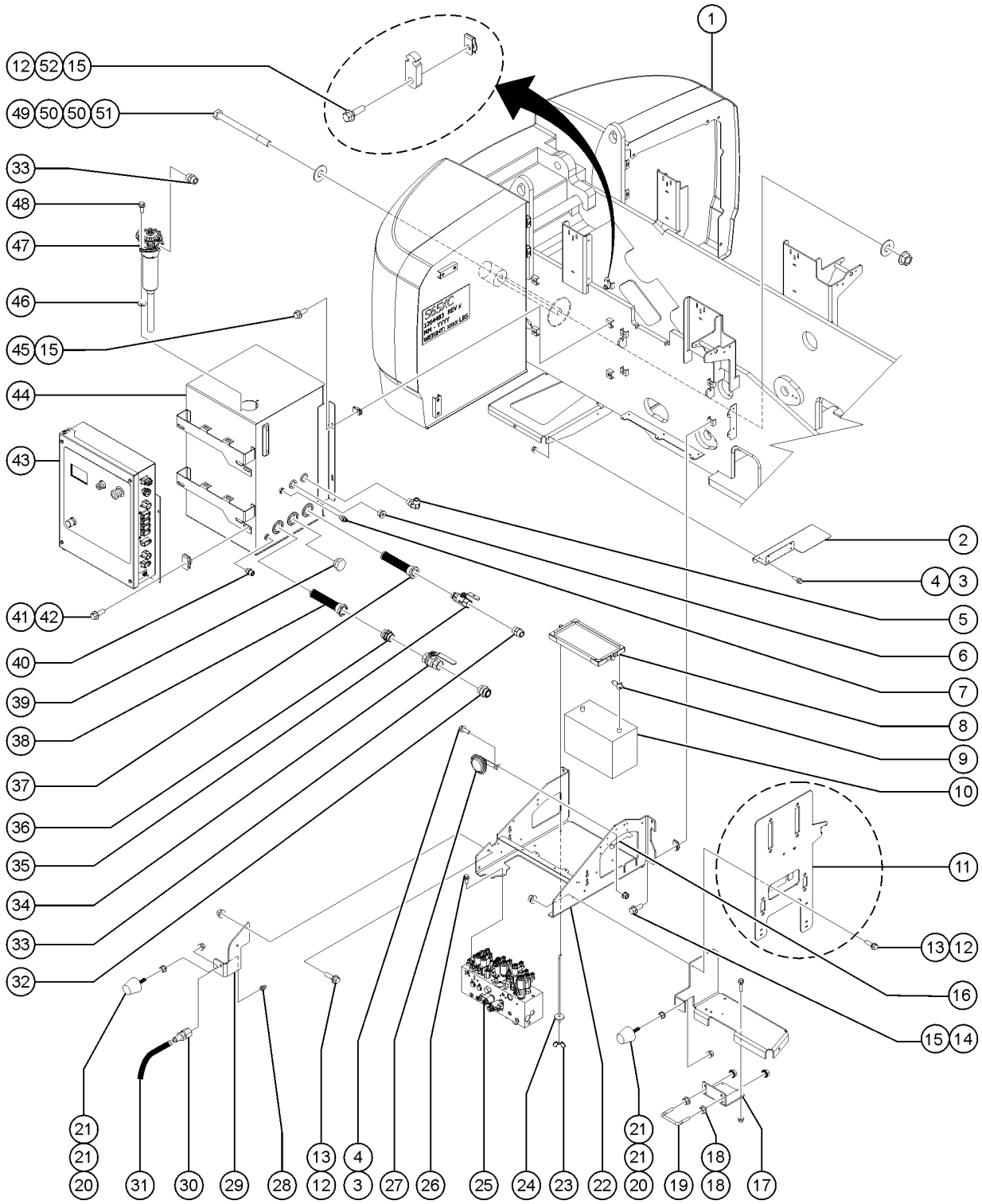

301.1 Tank Side - View 1

Item	Part No.	Description	Qty.
47	1281808GT	FILTER ASSY, INTANK, 49GPM to SN S65XCH-44999	1
47-	1283103GT	KIT, FILTER ELEMENT, HYD TANK RETURN	1
47-	1282117GT	FILTER,ELEMENT,HYD TANK,RETURN	1
47B	1316958GT	OPTIONS, FILTER ASSY. S65XC from SN S65XCH-45000	1
47B-	1281808GT	FILTER ASSY, INTANK, 49GPM	1
47B-	1316867GT	FILTER ASSY, INTANK, S65XC	1
48	824136GT	SCREW, HHC, M8-1.25 X 25, DIN933, 10.9, ZAB	2
49	1268832GT	from SN S65XCH-45000 SCREW,HHC,1-8X19.5,2,ZAG	1
50	1256469GT	WASHER,FLAT,1.0,USS,ZAG	2
51	1283024GT	NUT,NYLOCK,1-8,8,ZAG	1
51B	824031GT	NUT, TL FLG, 1-8, G, ZAG	1
52	822692GT	CLAMP, WIRE, 16/2	2

302.1 Tank Side - View 2

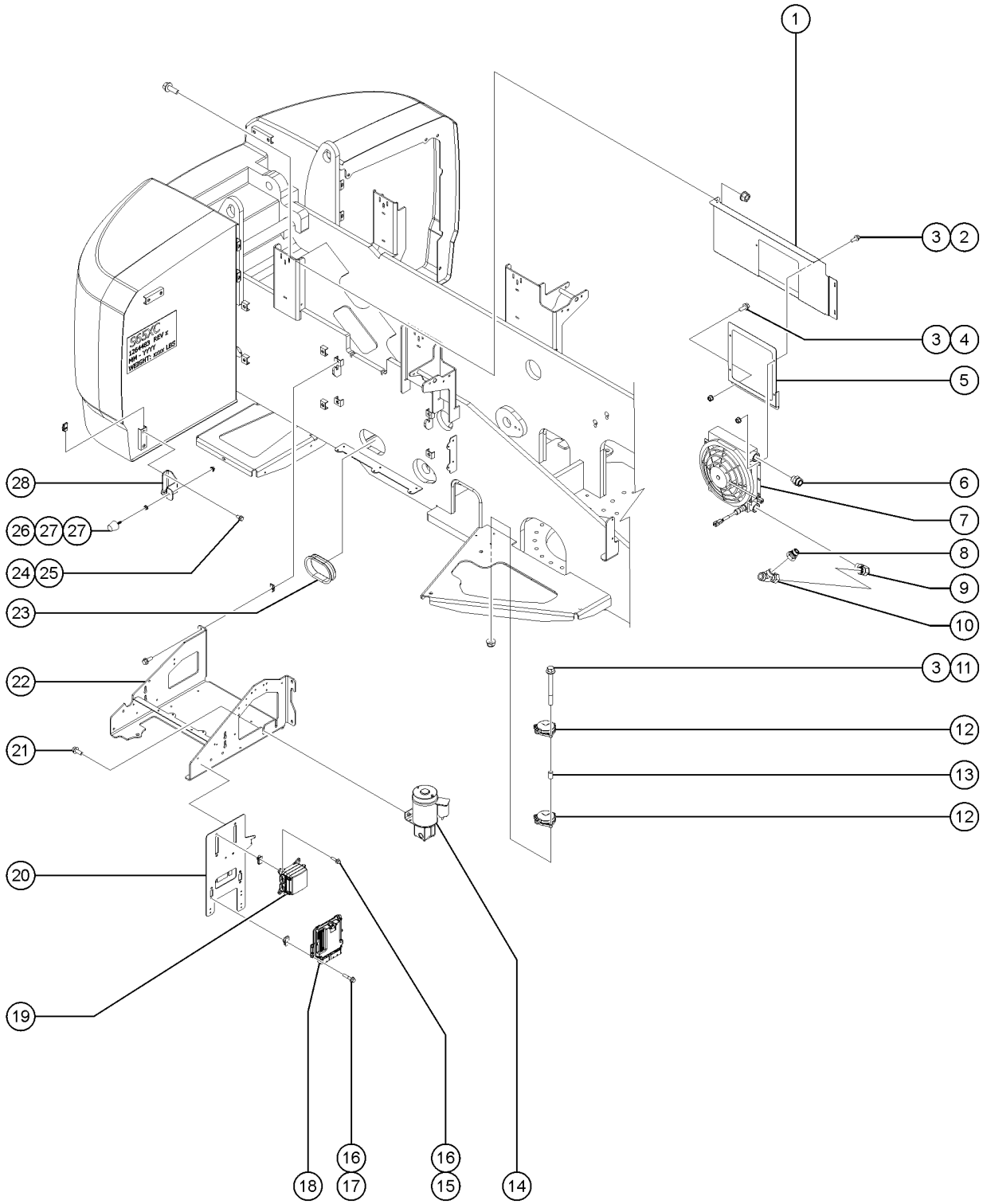

302.1 Tank Side - View 2

Item	Part No.	Description	Qty.
1		Ref. FORMING, BULKHEAD, S60 TS FRON Refer to 308.1	
2	824078GT	SCREW,HHF,1/4-20X.75,8,ZAG	4
3	1277924GT	NUT,NYLOCK FLG,1/4-20,F,ZAG	9
4	824081GT	SCREW,HHF,1/4-20X1.5,8,ZAG	2
5	77693GT	FORMING,OIL COOLER MOUNT	1
6	49519GT	CONN,520120-16-12	1
7	71259GT	OIL COOLER W/FAN, 12VDC	1
7-	75854GT	FAN - VENTED	
7-	75855GT	THERMOSTAT -OIL COOLER (71259)	
8	101293GT	REDUCER,520123-16-12	1
9	48878GT	ELBOW,90D,520220-16-12	1
10	42787GT	TEE,RUN,SWIVEL,520432-16	1
11	824083GT	SCREW,HHF,1/4-20X2.5,8,ZAG	3
12	823368GT	SENSOR,LEVEL,UNIVERSAL	2
13	8149GT	SPACER,NYLON .257 X .5 X .75"	3
14	146180GT	ASSEMBLY, AUX POWER UNIT, 12VDC	1
14-	1264969GT	MOTOR, 12VDC, I-TERMINAL	
14-	146181GT	SOLENOID, APU	
14-	146182GT	GROUND WIRE,SOLENOID	
14-	37187GT	SEAL KIT, 37185 PUMP	
14-	37192GT	COUPLER, PUMP / MOTOR (36179)	
14-	58489GT	PUMP ASSY,AUX.POWER UNIT 89617	
14-	62414GT	SEAL, SHAFT, 60511 APU	
15	824079GT	SCREW,HHF,1/4-20X1,8,ZAG	4
16	56912GT	SPRING CLIP,1/4-20,.025-.15X.54,ZAG	8
17	824080GT	SCREW, HHF, 1/4-20 X 1.25, 8, ZAG	4
18	214795GT	ECM, DEUTZ (must contact service parts to order, SN information is required)	1
19	1269738GT	MODULE, VEC, ALC600	1

302.1 Tank Side - View 2

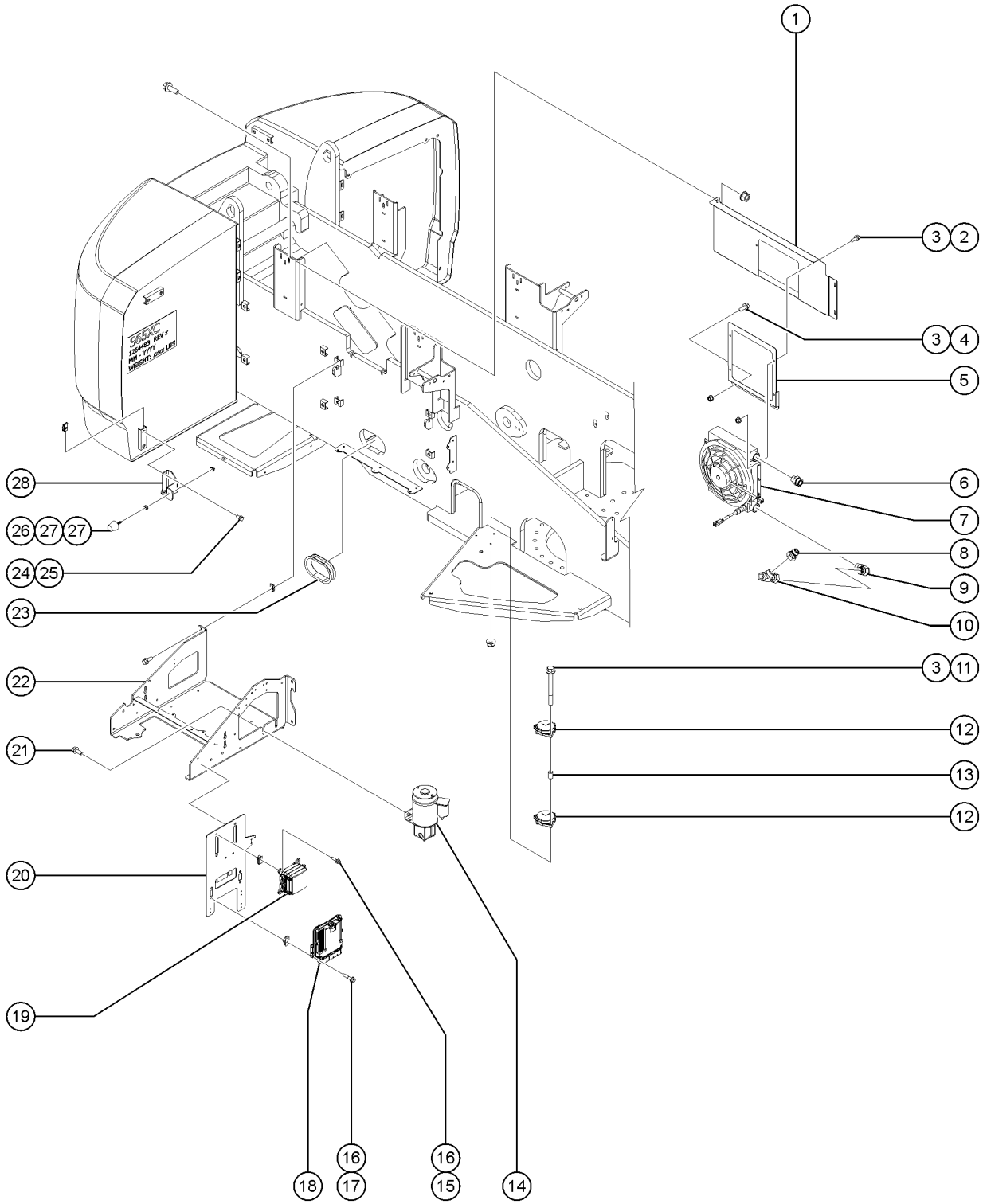

302.1 Tank Side - View 2

Item	Part No.	Description	Qty.
19-	1251502GT	FUSE, ATM, 10AMP	
19-	1251503GT	RELAY, 12V MICRO, 35AMP	
19-	1251504GT	DIODE, 6A 22903-6V	
19-	1251505GT	TOOL, FUSE PULLER, ATM	
19-	1251506GT	FUSE, ATM, 5AMP	
19-	1279520GT	CIRCUIT BREAKER 20A,TIII, ATC, 14VDC	
19-	1279521GT	CIRCUIT BREAKER 15A,TIII, ATC, 14VDC	
19-	1279522GT	RELAY SOLID STATE, 12V, 20A (B120-7022)	
19-	1280401GT	CIRCUIT BREAKER, 30AMP MINI	
19B	1286594GT	MODULE, VEC, RLYS AND FUSES (Perkins 404F-E22T)	1
19B-	1251500GT	FUSE, ATM, 20AMP	
19B-	1251501GT	FUSE, ATM, 30AMP	
19B-	1251502GT	FUSE, ATM, 10AMP	
19B-	1251503GT	RELAY, 12V MICRO, 35AMP	
19B	1251504GT	DIODE, 6A 22903-6V	
19B-	1251505GT	TOOL, FUSE PULLER, ATM	
19B-	1251506GT	FUSE, ATM, 5AMP	
19B-	1279520GT	CIRCUIT BREAKER 20A,TIII, ATC, 14VDC	
19B-	1280401GT	CIRCUIT BREAKER, 30AMP MINI	
19B-	1288984GT	FUSE, ATM, 1AMP	
20	823074GT	WELDMENT,ECU MOUNT,DEUTZ D2.9	1
20-	1253477GT	SCREW,PHPM,4-40X.5,ZAG	
20-	1259338GT	WASHER,LOCK,#4,ZAG	
20-	1259339GT	NUT,4-40,ZAG	
20B	1286395GT	WELDMENT, ECU BRACKET, S60 (Perkins 404F-E22T)	1
20B-	824078GT	SCREW,HHF,1/4-20X.75,8,ZAG	
20B-	56912GT	SPRING CLIP,1/4-20,.025-.15X.54,ZAG	
21	824090GT	SCREW,HHF,3/8-16X1,8,ZAG	2

302.1 Tank Side - View 2

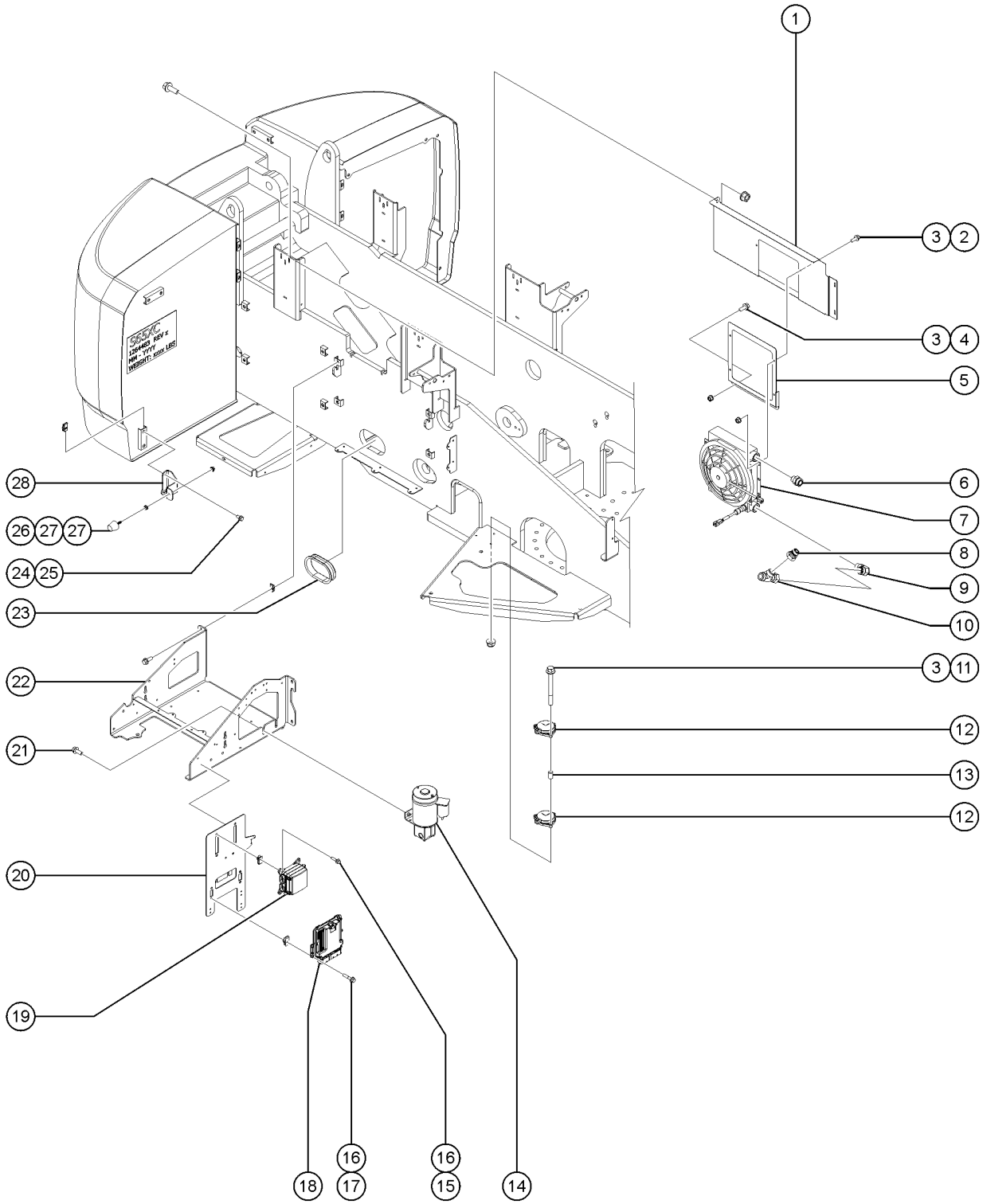

302.1 Tank Side - View 2

Item	Part No.	Description	Qty.
22		Ref. WELDMENT, BATT/MANIF TRAY, S60/65XC ..... Refer to 301.1	
23	53386GT	GUARD, HOSE PROTECTOR	2
24	824089GT	SCREW, HHF, 3/8-16 X .75, 8, ZAG	2
25	29868GT	SPRING CLIP,3/8-16,.05-.20X.73,ZAG	2
26	1261277GT	RUBBER BUMPER, 1.25 X 1.25 IN	1
27	1255805GT	NUT,SERRATED,5/16-18,8,ZAG	2
28	1259002GT	FORMING, TS COVER BUMPER	1

303.1 Tank Side - Diesel Fuel Tank Installation

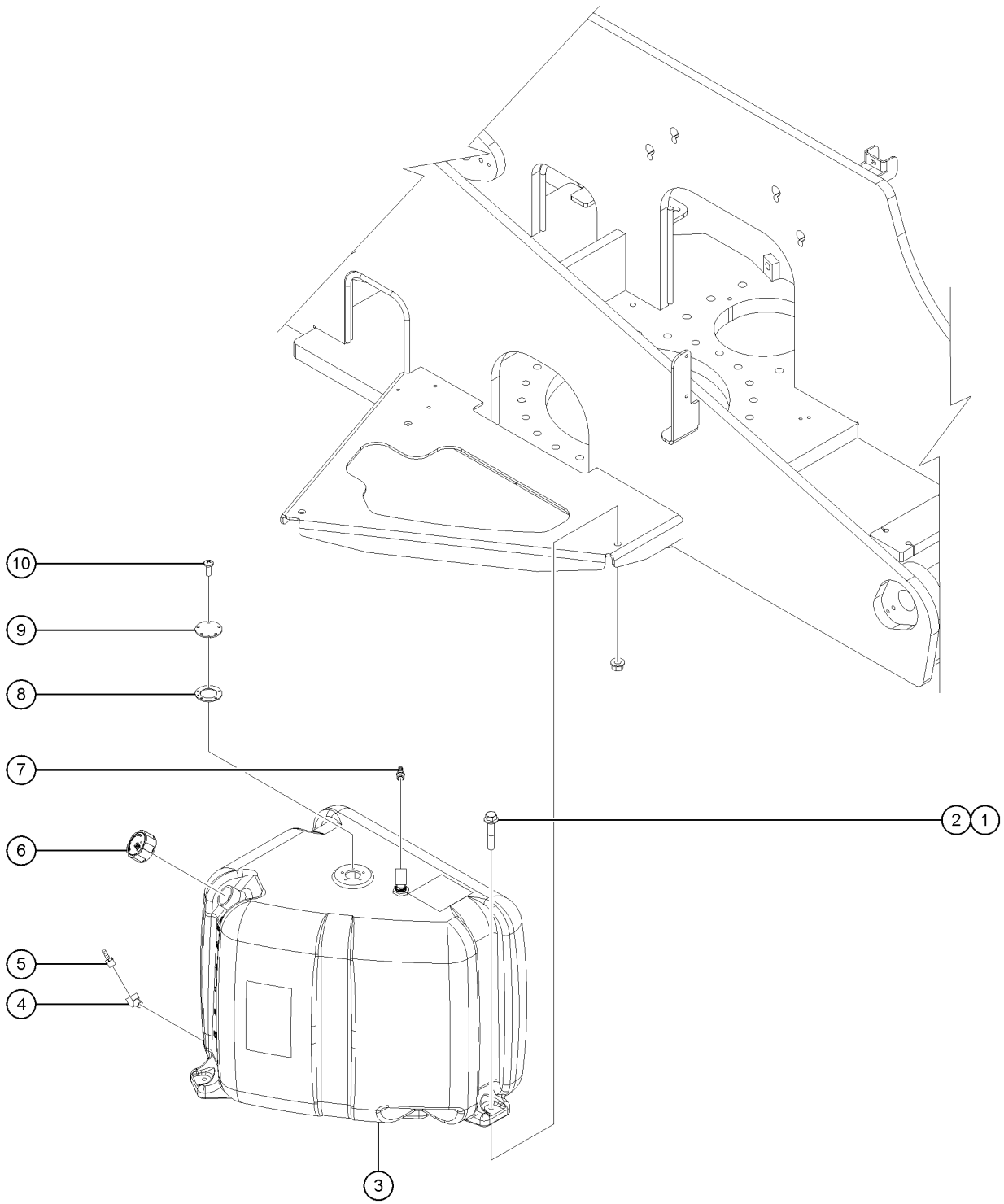

Item	Part No.	Description	Qty.
1	1253478GT	SCREW,HHF,3/8-16X2,8,ZAG	3
2	824029GT	NUT, TL FLG, 3/8-16, G, ZAG	3
3	1255643GT	TANK, FUEL, Z80 35 GAL	1
3-	54324GT	FITTING,BULKHEAD,3/8NPT,FUELTK	
3-	823356GT	TUBE,FUEL RETURN,3/8X3/8X23.5	
3B	1274331GT	ASSY, FUEL TANK, 35GAL, DIESEL	1
3B-	1271770GT	SENSOR, FUEL LEVEL, 30" DIESEL	
3B-	824215GT	SCREW, PHPM, 10-32 X .75, ZAG	
4	22348GT	ELBOW,130339-6-6	1
5	824471GT	FITTING,3/8 NPT TO 1/2 BARB Deutz D 2.9, Deutz 2.9L Turbo	1
5B	54124GT	HOSE END,BARB,3/8 MNPT X 5/16 Deutz D2011L03I, Deutz TD2011L04i ROW, Perkins 404F-E22T	1
6	101726GT	CAP,FUEL,DIESEL,1/8"VENT(GRN) no longer available, (replaced by 1316635)	1
6B	1316635GT	CAP, FUEL, DIESEL, 0.08 IN HOLE (BLACK)	1
7	27901GT	HOSE END,BARBED,RIGID,-6-6 Deutz D 2.9, Deutz 2.9L Turbo, Perkins 404F-E22T	1
7B	27901GT	HOSE END,BARBED,RIGID,-6-6 Deutz D2011L03I, Deutz TD2011L04i ROW	1
8	1271773GT	GASKET, TANK, FUEL SENSOR	1
9	1271772GT	CAP, TANK, FUEL SENSOR	1
10	1251757GT	SCREW,PHPM,10-32X.50,ZAG	5

304.1 Tank Side - Gasoline Fuel Tank Installation

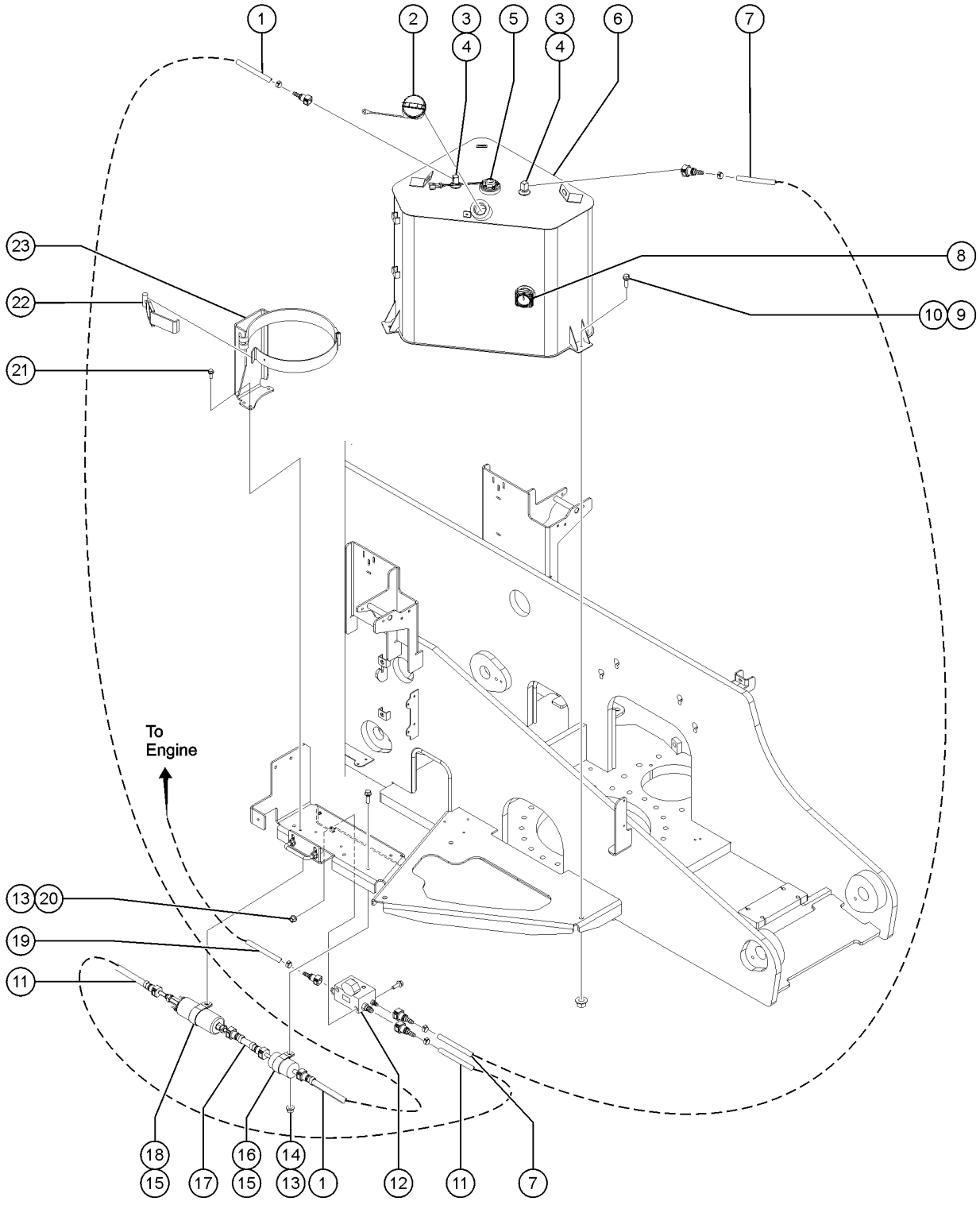

Item	Part No.	Description	Qty.
A	119055GT	HOSE ASSY,LP GAS	1
B	6833GT	CLAMP,0.50,#8 X 1/4,RUB CUSH	3
1	236911GT	HOSE,FUEL,5/16HIGH PRS 40 IN	1
1-	111819GT	FITTING,SAE J2044F X5/16 BARB	2
1-	65887GT	CLAMP,HOSE,1 EAR,1/2	2
1-	71909GT	HOSE,FUEL,5/16 HIGH PRESSURE**	40-inches
2	119918GT	CAP,FUEL,GASOLINE 3.5PSI	1
3	146417GT	ASSY, FUEL PICKUP TUBE	2
4	111818GT	FITTING,1/4 NPT X SAE J2044	2
5	1271771GT	SENSOR, FUEL LEVEL, 24" GAS	1
6	1291202GT	TANK ASSY, GAS, 30 GAL., STEEL (Complete, includes items 2-5 and 8)	1
6-	146376GT	TANK WLDMT, GAS, 30 GAL. STEEL	
6-	824078GT	SCREW,HHF,1/4-20X.75,8,ZAG	
6-	1277924GT	NUT,NYLOCK FLG,1/4-20,F,ZAG	
7	236912GT	HOSE,FUEL,5/16HIGH PRS 60 IN	1
7-	111819GT	FITTING,SAE J2044F X5/16 BARB	2
7-	65887GT	CLAMP,HOSE,1 EAR,1/2	2
7-	71909GT	HOSE,FUEL,5/16 HIGH PRESSURE**	60-inches
8	146413GT	GAUGE, FUEL LEVEL, 20/30 GAL	1
9	824091GT	SCREW, HHF, 3/8-16 X 1.25, 8, ZAG	3
10	824029GT	NUT, TL FLG, 3/8-16, G, ZAG	3
11	229202GT	HOSE,FUEL,5/16 HIGH PRES 35 IN	1
11-	111819GT	FITTING,SAE J2044F X5/16 BARB	2
11-	65887GT	CLAMP,HOSE,1 EAR,1/2	2
11-	71909GT	HOSE,FUEL,5/16 HIGH PRESSURE**	35-inches
12	119170GT	FUEL SENSOR ASSY.	1

304.1 Tank Side - Gasoline Fuel Tank Installation

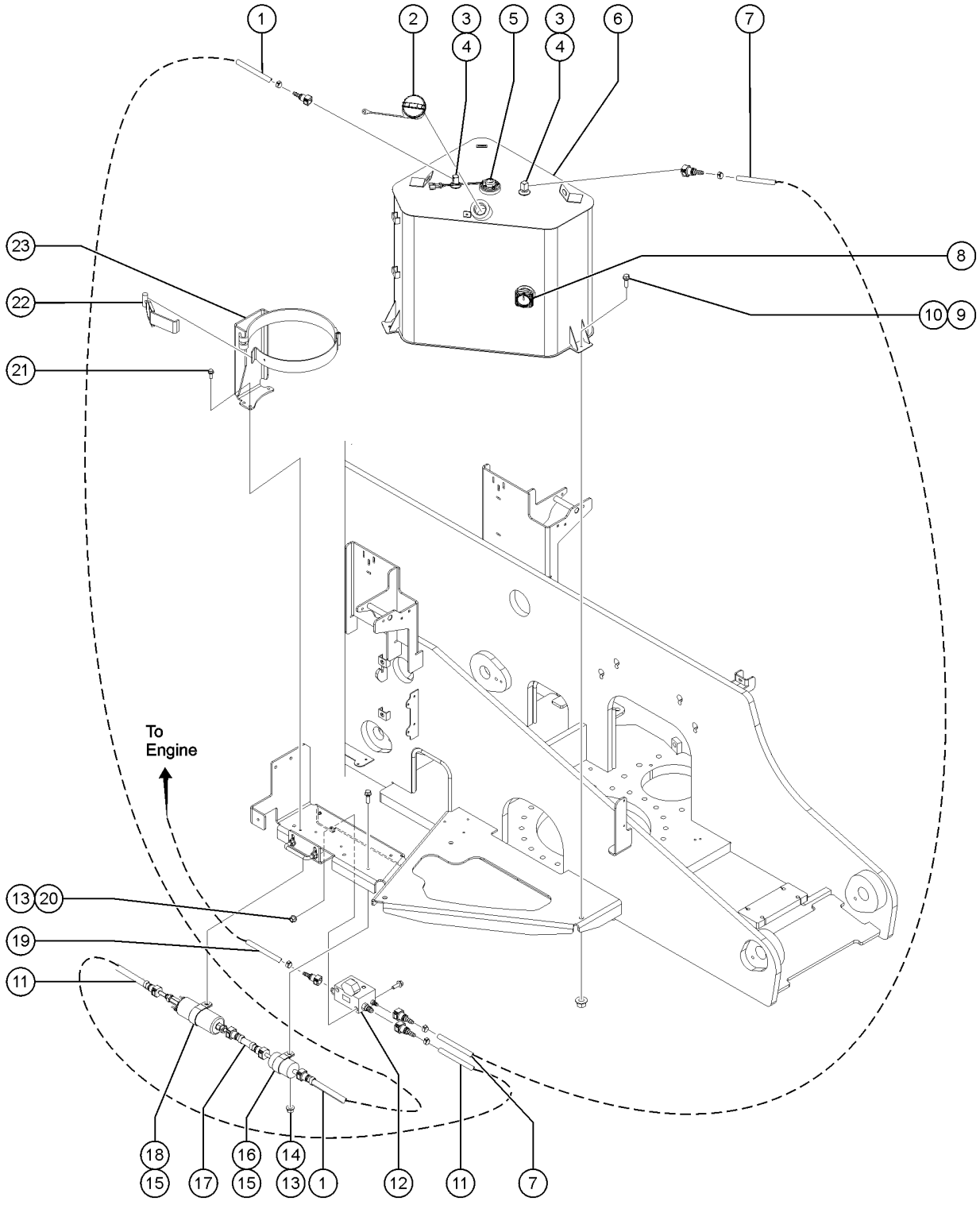

Item	Part No.	Description	Qty.
13	824027GT	NUT, TL FLG, 1/4-20, G, ZAG	
14	824080GT	SCREW, HHF, 1/4-20 X 1.25, 8, ZAG	
15	27497GT	CLAMP,RUBBER CUSHIONED-2 5/32	2
16	1271652GT	FILTER, FUEL, GM3.0L	1
17	229203GT	HOSE,FUEL,5/16 HIGH PRES 3 IN	1
17-	111819GT	FITTING,SAE J2044F X5/16 BARB	2
17-	65887GT	CLAMP,HOSE,1 EAR,1/2	2
17-	71909GT	HOSE,FUEL,5/16 HIGH PRESSURE**	3-inches
18	119168GT	FUEL PUMP,DSG-423 AND MSG-425	1
19	229201GT	HOSE,FUEL,5/16HIGH PRES 127 IN	1
19-	111819GT	FITTING,SAE J2044F X5/16 BARB	2
19-	65887GT	CLAMP,HOSE,1 EAR,1/2	2
19-	71909GT	HOSE,FUEL,5/16 HIGH PRESSURE**	127-inches
20	1253485GT	SCREW,HHF,1/4-20X2,8,ZAG	
21	824090GT	SCREW,HHF,3/8-16X1,8,ZAG	2
22	49000GT	L.P.TANK LATCH Sold separately	1
23	1291342GT	WELDMENT, LP TANK MOUNT, S60 XC	1

305.1 Ground Control Box - External

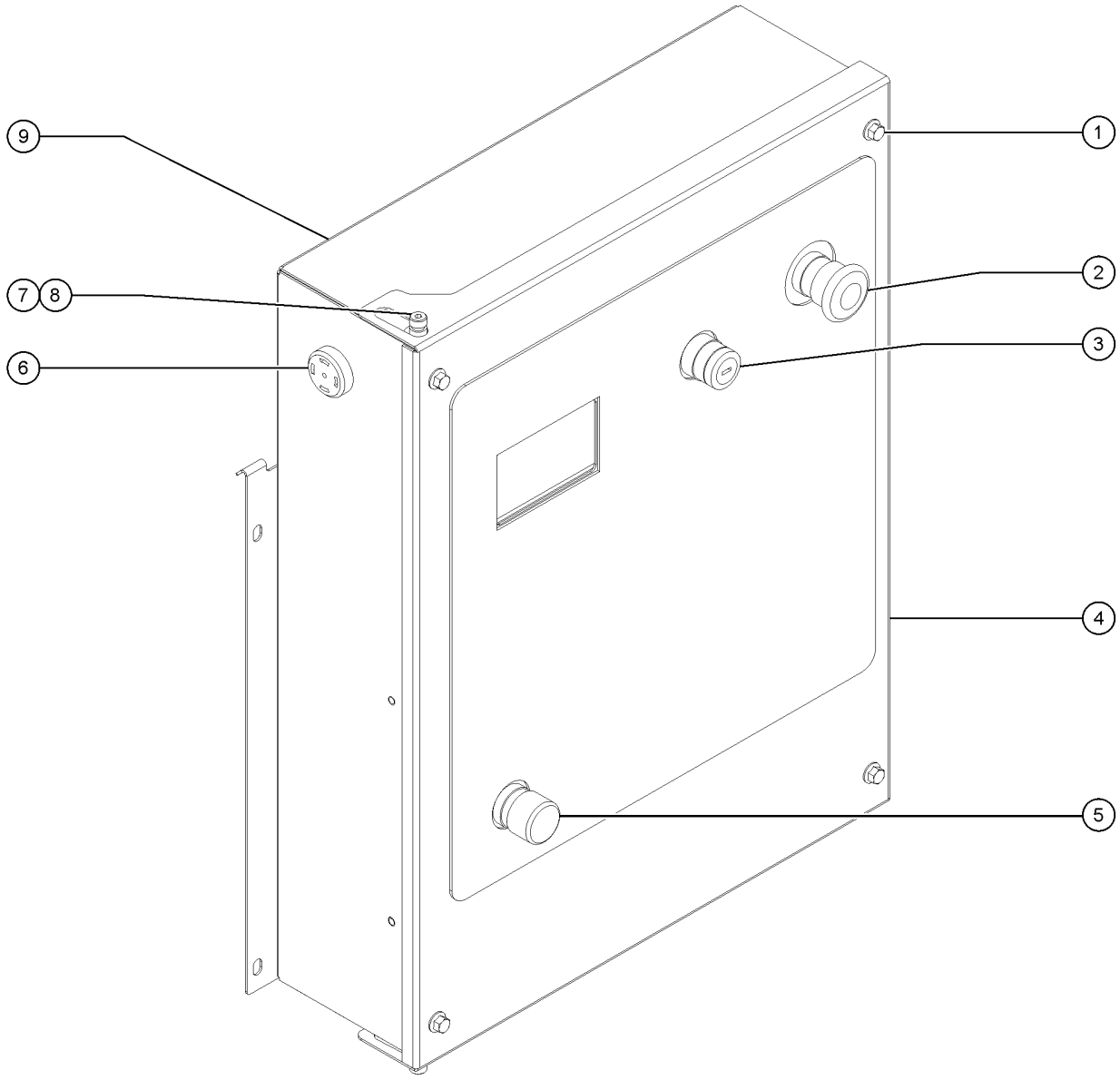

Item	Part No.	Description	Qty.
A	1290459GT	ASSEMBLY, GBOX, S-BOOM, ALC600, TELEMATICS 2.0 (For S-60 XC)	1
B	1290460GT	ASSEMBLY, GBOX, S-BOOM, JIB, ALC600, TELEMATICS 2.0 (For S-65 XC)	1
1	1256855	SCREW,HHF,1/4-20X.625,8,ZAG	4
2	66812GT	BUTTON,PUSH,RED MUSHROOM HEAD	1
2-	66817GT	E-STOP W/ NC CONTACT	
2-	66818GT	CONTACT,NC	
3	66811GT	KEYSWITCH,3POS.MNTND.DR WKEY**	1
3-	66817GT	E-STOP W/ NC CONTACT	
3-	66818GT	CONTACT,NC	
3-	66816GT	CONTACT,N.O.***	
4	1275937GT	WELDMENT LID TCON ALC600	1
5	66813GT	BUTTON,PUSH,BLACK W/SEAL***	1
5-	66821GT	BASE,WITHOUT CONTACTS	
5-	66816GT	CONTACT,N.O.***	
6	39540GT	ALARM, STEADY TONE*** does not include ring nut, 72326	1
6-	72326GT	NUT - PLASTIC, RING FOR ALARMS	
7	1257410GT	BOLT,SHS,5/16X.375X1/4-20,ZAG	2
8	218449GT	WASHER,SHOULDER,NYLON	2
9	1290450GT	WELDMENT, BOX, TCON, ALC600, TELEMATICS 2.0	1
9-	30996GT	PLUG,NYLON .313 BLACK DOMED	

306.1 Ground Control Box - Internal

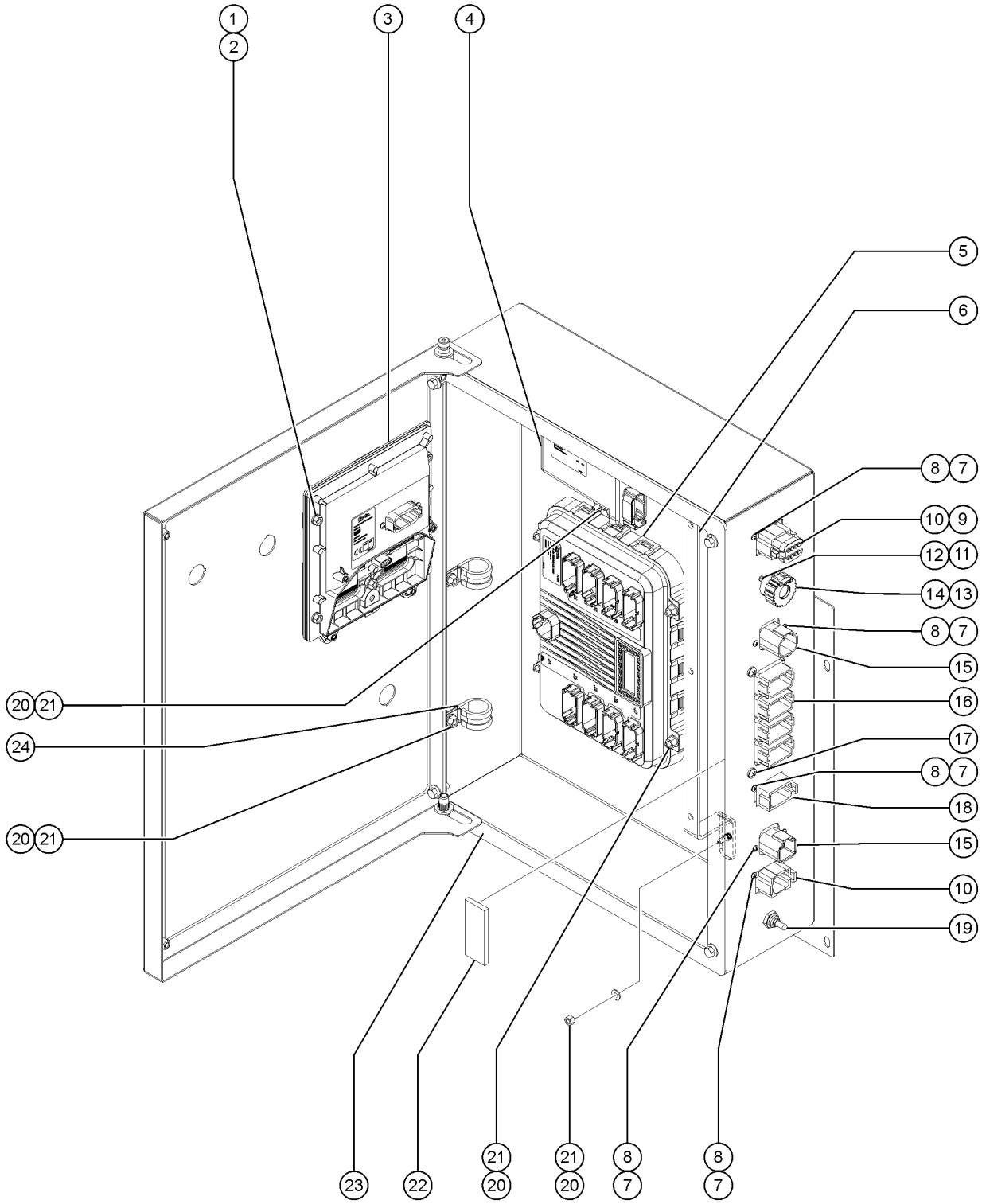

Item	Part No.	Description	Qty.
1	1271081GT	NUT,NYLOCK,8-32,8,ZAG	5
2	1257390GT	WASHER,FLAT,#8,SAE,ZAG	5
3	1286640GT	KIT,DISCON ALC600	1
3-	1268327GT	ECU, DISPLAY CONTROLLER	
3-	1268322GT	GASKET, RIBBON, DISCON	
3-	1268651GT	CABLE, FLAT FLEX, 30 POS 1MMX3"	
4	1280589GT	MODULE, RECOVERY to SN 65XCH-48423	1
5	1284523GT	ECU,TURNTABLE,S-XC,PROGRAMMED	1
5-	1288795GT	ECU, TURNTABLE, S-XC, ALC600	1
5-	1302966GT	SOFTWARE, APPLICATION, S-XC/S-J, ALC600	1
6	119644GT	BRACKET,PBOX WIRE SUPPORT	1
7	824214GT	SCREW,PHPM,6-32X.50,ZAG	10
8	1274164GT	NUT,NYLOCK,6-32,A,ZAG	10
9	119061GT	CONN, PLUG, 12 WAY, DEUTSCH, DT, GRAY	1
10	87755GT	CONN, RECEP, 8 WAY, DEUTSCH, DT, GRAY/FLANGE (UPPER PORT FOR TELEMATICS) (LOWER PORT FOR BOOM CABLE)	1
11	1253477GT	SCREW,PHPM,4-40X.5,ZAG	2
12	1283012GT	NUT,NYLOCK,4-40,2,ZAG	2
13	1272123GT	DUST CAP, RECEPTACLE, 5 WAY, CIRCULAR	1
14	1272122GT	CONN, RECEP, 5 WAY, DEUTSCH, HD10 SERVICE PORT	1
15	73717GT	CONN, RECEP, 4 WAY, DEUTSCH, DTP, FLANGE (UPPER PORT FOR POWER) (LOWER PORT FOR BOOM CABLE)	2
16	73736GT	CONN,RECEP 48 WAY,4 X 12 (ENGINE AND FUNCTION MANIFOLD)	1
17	824226GT	SCREW, PHPSH, #12-11 X .75, ZAG	4
18	73730GT	CONN, RECEP, 12 WAY, DEUTSCH, DT, GRAY/FLANGE (SENSORS)	2
19	128203GT	SWITCH TOGGLE ASSY SPDT 2P MOM (RECOVERY SWITCH) to SN 65XCH-48423	1
19B	128201GT	SWITCH TOGGLE ASSY DPDT 2P MOM from SN 65XCH-48424	1
20	1274168GT	NUT,NYLOCK,10-32,A,ZAG	10
21	1253185GT	WASHER,FLAT,#10,USS,ZAG	10
22	30997GT	CORROSION INHIBITOR,FOAM to SN S65XCH-49371	1

306.1 Ground Control Box - Internal

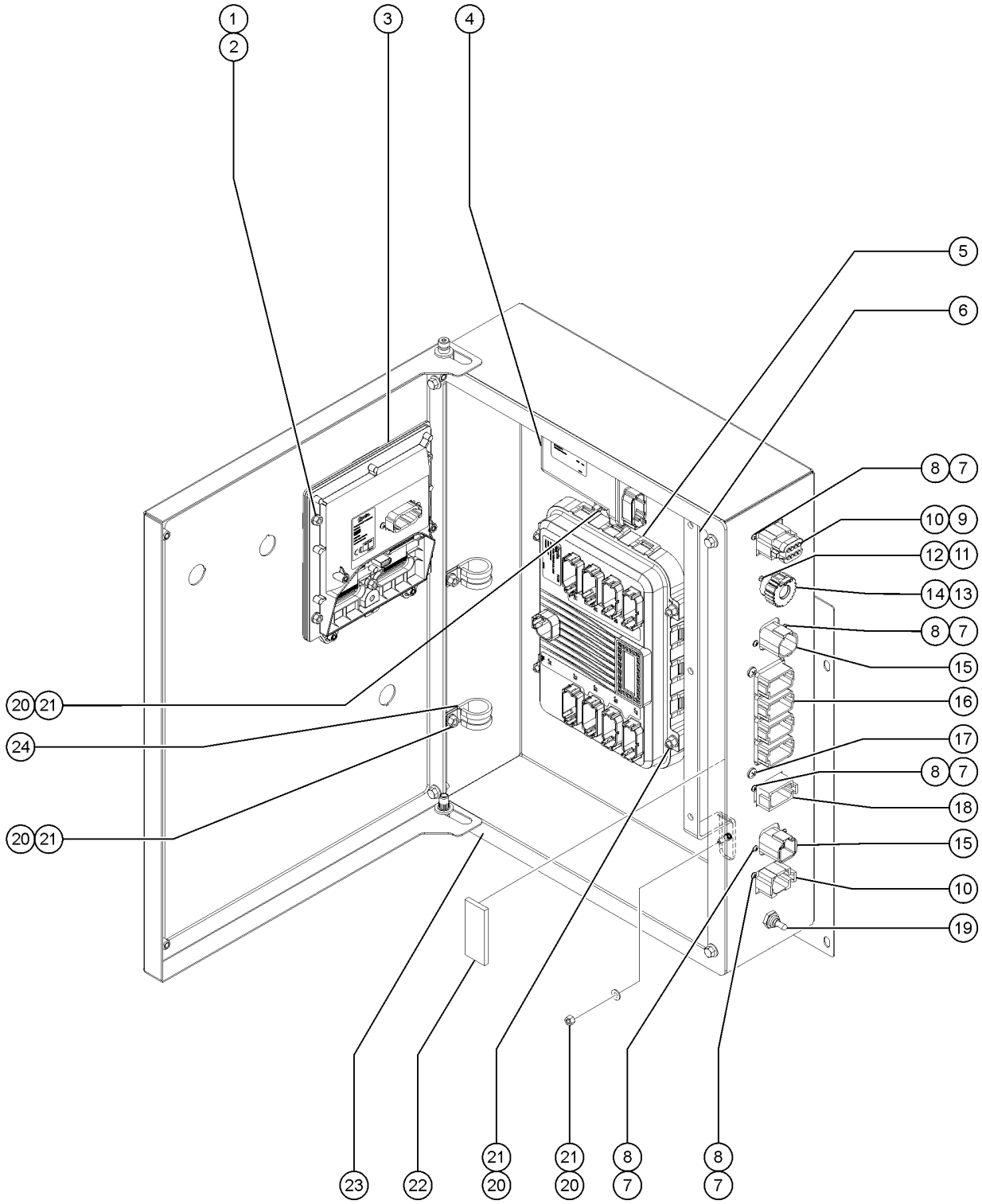

Item	*Part No.*	*Description*	*Qty.*
23	1277169GT	GASKET GBOX ALC600	1
24	18666GT	CLAMP,1.00,#16 X 1/4,RUB CUSH	2

307.1 Turntable Components and Swivel Drive Assembly

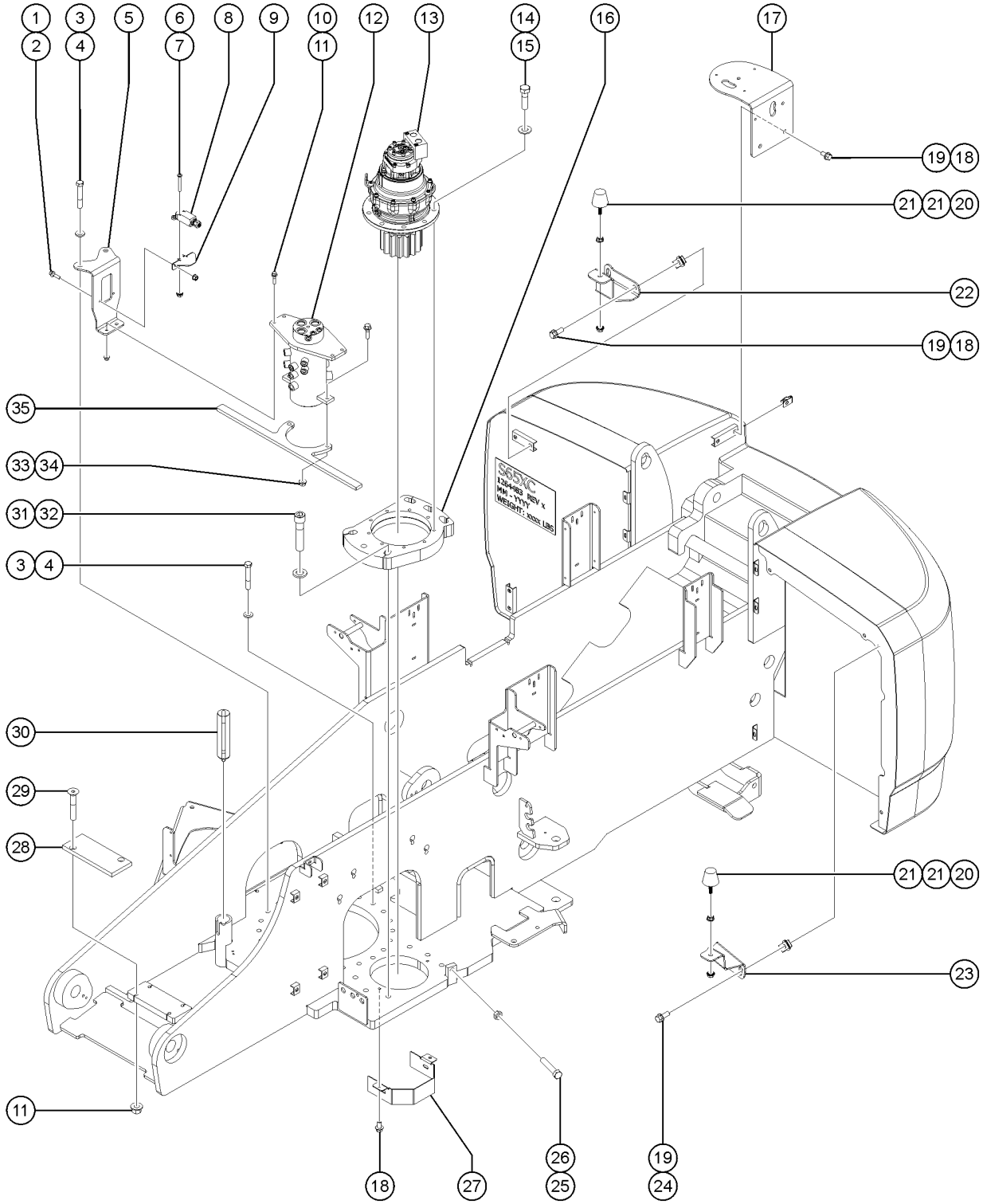

Item	Part No.	Description	Qty.
1	824079GT	SCREW,HHF,1/4-20X1,8,ZAG	2
2	1277924GT	NUT,NYLOCK FLG,1/4-20,F,ZAG	2
3	1256170GT	SCREW,HHC,5/8-11X4,8,ZAG	24
4	1256182GT	WASHER,FLAT,5/8,F436,HRD,ZAG	24
5	1255720GT	FORMING,HYD SWIVEL BRACKET	2
6	824216GT	SCREW, PHPM, 10-32 X 1.5, ZAG	2
7	1264261GT	NUT,SERRATED,10-32,ZAG	2
8	88356-13103GT	SWITCH,LIMIT,W/RLLR ARM,NO/NC	1
8-	119067GT	CONN, RECEP, 4 WAY, DEUTSCH, DT, ENDCAP	
8-	60443GT	LOCK, RECEP 4WAY, 14-18GA	
8-	73713GT	TERMINAL, PIN, DT, 14-18 AWG, NICKEL, 0.095-0.150 OD, DEUTSCH, STRIP	
8-	73725GT	BOOT,DTSCH,DTP4-BT	
8-	19491GT	CONTACTOR,LIMIT SWITCH	
8-	97128GT	ROLLER ARM,LIMIT SWITCH***	
9	1255722GT	FORMING,DRIVE ENABLE LIMIT SW	1
10	824092GT	SCREW,HHF,3/8-16X1.5,8,ZAG	4
11	1274322GT	NUT,NYLOCK FLG,3/8-16,F,ZAG	6
12	1280390GT	SWIVEL, HYD 8 PORT	1
12-	94937GT	SEAL KIT,8-PORT SWIVEL	
12-	T106954GT	SEAL, O-RING LIP	
12-	T106955GT	SEAL, POLY, CHAMFER	
12-	T106957GT	SEAL, CAP, NOTCHED	
12-	T106961GT	SEAL, O-RING ENERGIZER	
12-	T106962GT	SEAL, CAP, NOTCHED	
13	1255768GT	SWING DRIVE ASSEMBLY USA and Canadian models	1
13-	1255769GT	SEAL KIT, SWING BRAKE	
13-	1255770GT	KIT, FRICTION DISC	
13-	1255771GT	KIT, BRAKE SPRING	

307.1 Turntable Components and Swivel Drive Assembly

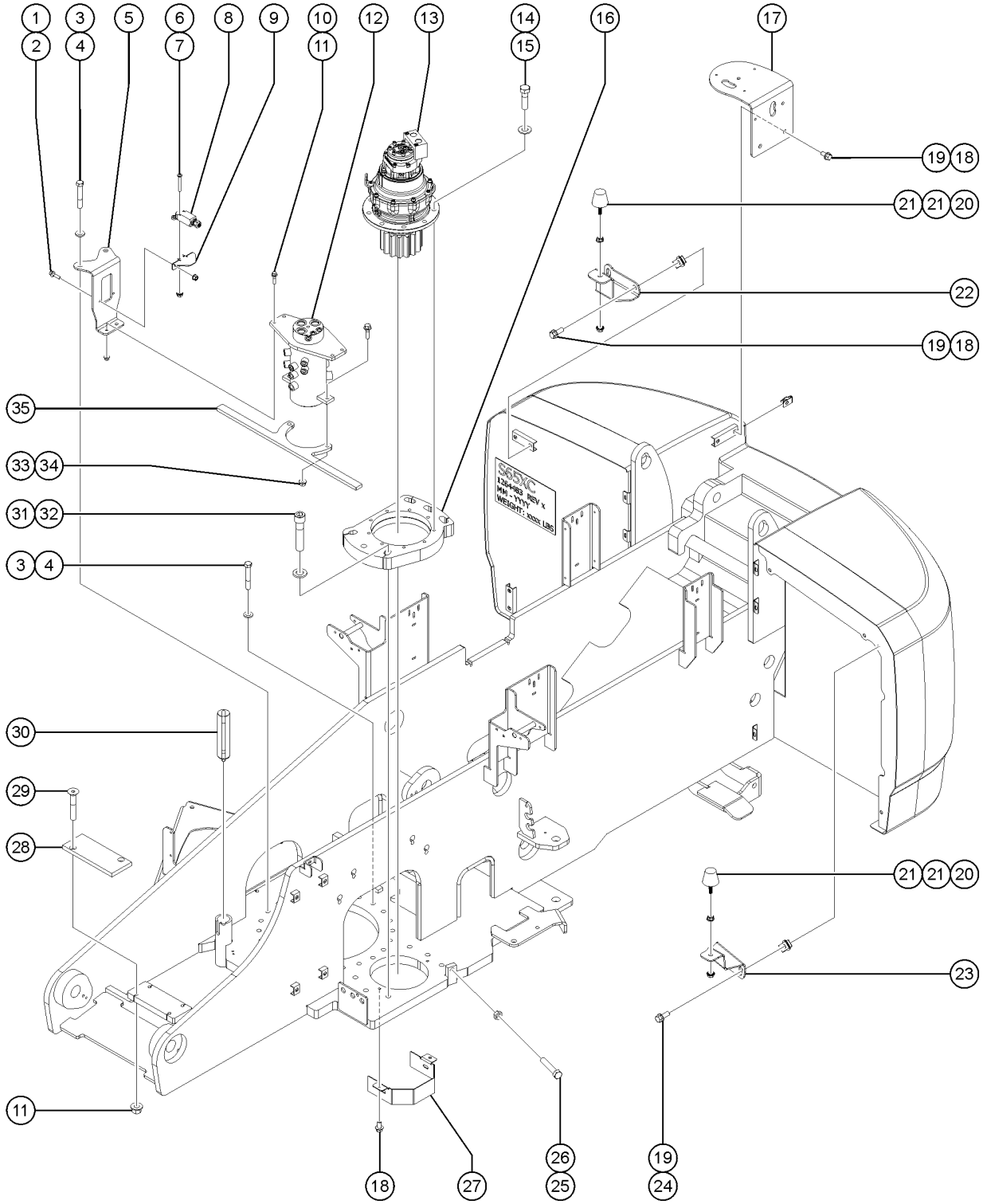

Item	Part No.	Description	Qty.
13-	1255772GT	KIT, SWING BRAKE REBUILD	
13-	1255773GT	BRAKE TUBING	
13-	139308GT	SWING MOTOR COMPLETE***	
13-	139309GT	CBV ASSEMBLY***	
13-	139323GT	VALVE,COUNTERBAL,CBCA-LIN***	
13-	58304GT	SHAFT,OUTPUT	
14	1256168GT	SCREW,HHC,1/2-13X1.75,8,ZAG	9
15	825353GT	WASHER,FLAT,1/2,SAE,HRD,ZAG	9
16	77671GT	PLATE,BACKLASH ADJUSTMENT MACH	1
17	1253796GT	FORMING, LIGHT/BEACON BRKT, LH	1
17B	1253795GT	FORMING, LIGHT/BEACON BRKT, RH	1
18	824089GT	SCREW, HHF, 3/8-16 X .75, 8, ZAG	8
19	29868GT	SPRING CLIP,3/8-16,.05-.20X.73,ZAG	10
20	1261277GT	RUBBER BUMPER, 1.25 X 1.25 IN	2
21	1255805GT	NUT,SERRATED,5/16-18,8,ZAG	4
22	1259002GT	FORMING, TS COVER BUMPER	1
23	1259001GT	FORMING, ES COVER BUMPER	1
24	824090GT	SCREW,HHF,3/8-16X1,8,ZAG	4
25	1256846GT	SCREW,HEX TAP,3/4-10X4,8,ZAG	1
26	1256837GT	NUT,JAM,3/4-10,A, ZAG	1
27	77879GT	FORMING,PINION GUARD	1
28	161607GT	WEAPAD, BOOM REST	1
29	1256842GT	SCREW,FHS,3/8-16X2.25,F835,ZAG	2
30	81834GT	WELDMENT,TRANSPORT LOCK	1
31	1257223GT	SCREW,SHC,3/4-10X3.75,A574,ZAG	6
32	1256863GT	WASHER,FLAT,.75,F436,HRD,ZAG	6
33	1274172GT	NUT,NYLOCK FLG,1/2-13,G,ZAG	2
34	826171GT	SCREW,HHF,1/2-13X1.75,ZAG	2

307.1 Turntable Components and Swivel Drive Assembly

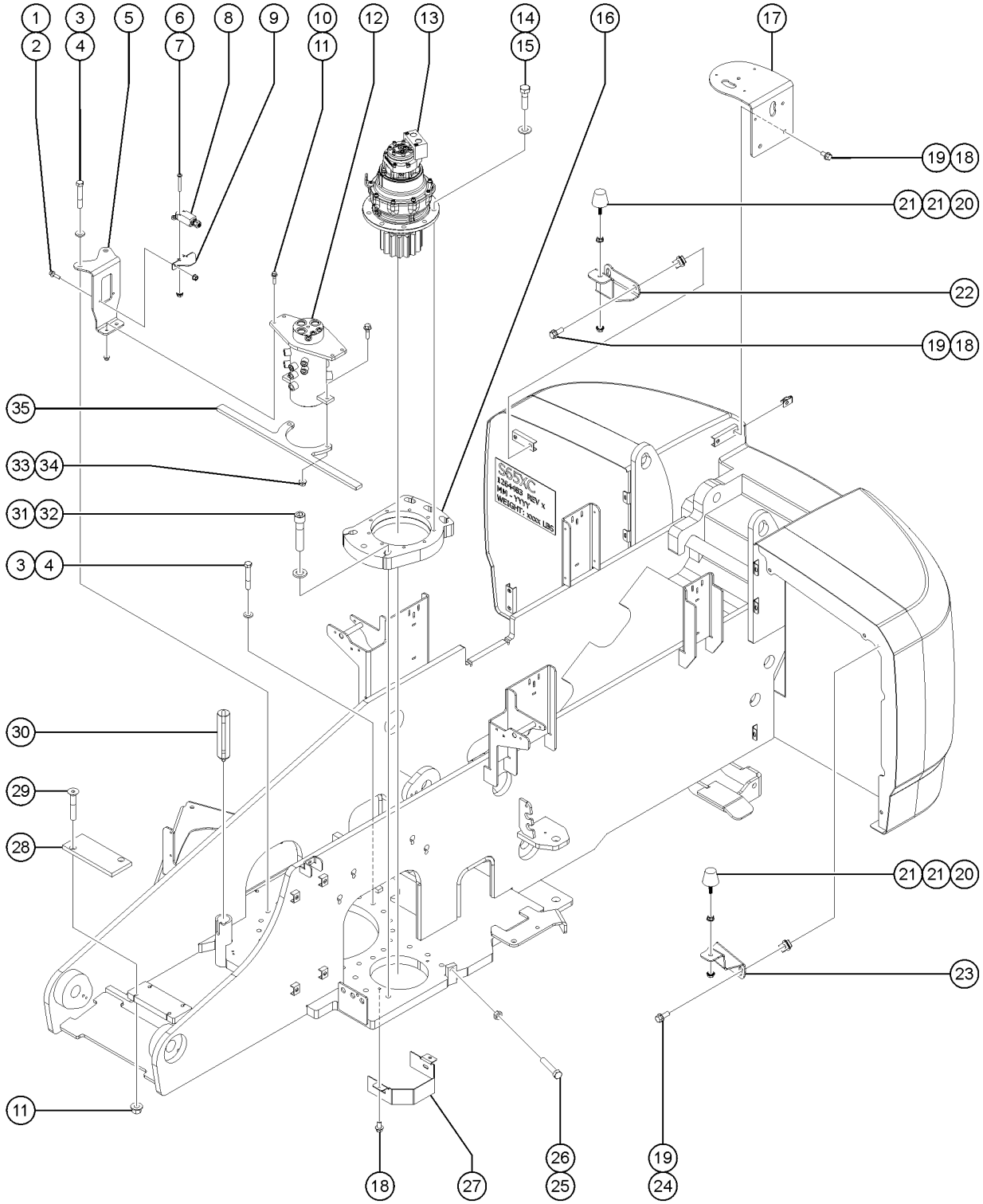

Item	*Part No.*	*Description*	*Qty.*
35	1270151GT	HYDRAULIC SWIVEL SUPPORT	1

308.1 Turntable Covers - Hydraulic Tank Side

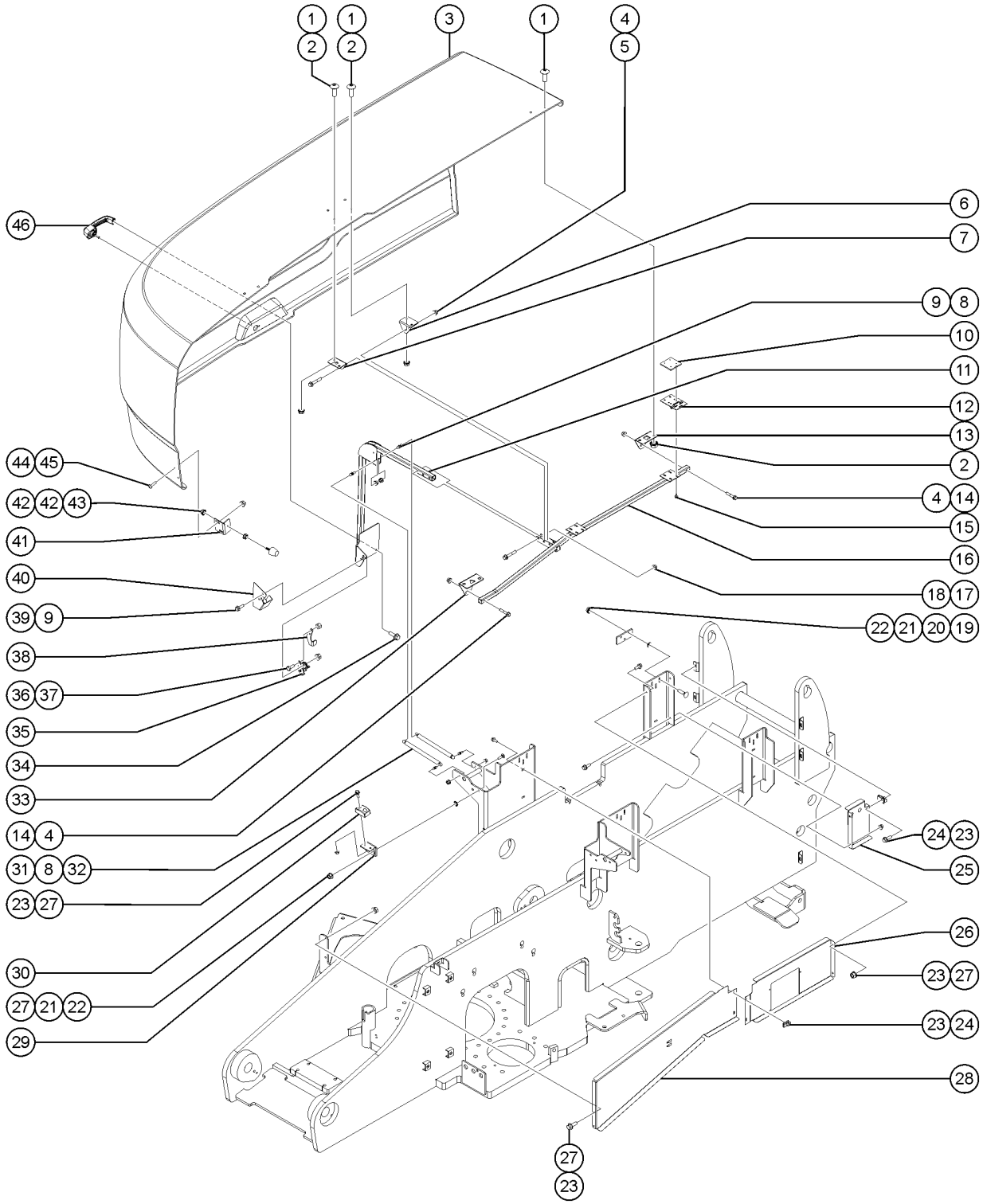

Item	Part No.	Description	Qty.
1	1261836GT	SCREW, THM, TORX, 3/8-16X1,SS	8
2	1257628GT	NUT,SERRATED,3/8-16,ZAG	8
3	1281974GT	ASSY, TS SWING CHASSIS COVER S65XC (includes items 1, 2, 3-, 4-7, 10, 12-16, 31, 33, 34 and 41-46)	
3-	1304649GT	MACHINED, COVER, SWING CHASSIS replaced by 1265999GT, (for S-65XC)	1
3-	1265999GT	COVER, SWING CHASSIS, TANK SIDE	1
4	1274322GT	NUT,NYLOCK FLG,3/8-16,F,ZAG	3
5	1256856GT	SCREW,HHF,3/8-16X2.5,8,ZAG	1
6	1253831GT	MOUNT, COVER SUPPORT CTR 93DEG	1
7	1253830GT	MOUNT, COVER SUPPORT CTR 86DEG	1
8	33555GT	BALL STUD**	4
9	824028GT	NUT, TL FLG, 5/16-18, G, ZAG	4
10	1258724GT	SUPPORT, TAPPED HINGE	2
11	1255986GT	WLDMT, TS LOWER COVER SUPPORT	1
12	1278912GT	HINGE,.375X.120THK.,SLOTTED	2
13	1258723GT	MOUNT, COVER SUPPORT FRONT	1
14	1253478GT	SCREW,HHF,3/8-16X2,8,ZAG	2
15	1256855	SCREW,HHF,1/4-20X.625,8,ZAG	8
16	1256767GT	WLDMT, TS UPPER COVER SUPPORT	1
17	824029GT	NUT, TL FLG, 3/8-16, G, ZAG	2
18	1256693GT	SCREW,HHF,3/8-16X2.25,8,ZAG	2
19	1256679GT	NUT,SERRATED,1/4-20,8,ZAG	6
20	77778GT	PLATE,HINGE SUPPORT,BLUE PAINT	2
21	238135GT	PUSHNUT RETAINER, 1/4" X 1/2"OD, ZINC	8
22	1256127GT	BOLT,CARRIAGE,1/4-20X1",GR 5,ZAG	8
23	824078GT	SCREW,HHF,1/4-20X.75,8,ZAG	12
24	56912GT	SPRING CLIP,1/4-20,.025-.15X.54,ZAG	4
25	1253819GT	FORMING, BULKHEAD, TS FRONT	1
26	1273343GT	FORMING, BULKHEAD, S60 TS FRONT	1

308.1 Turntable Covers - Hydraulic Tank Side

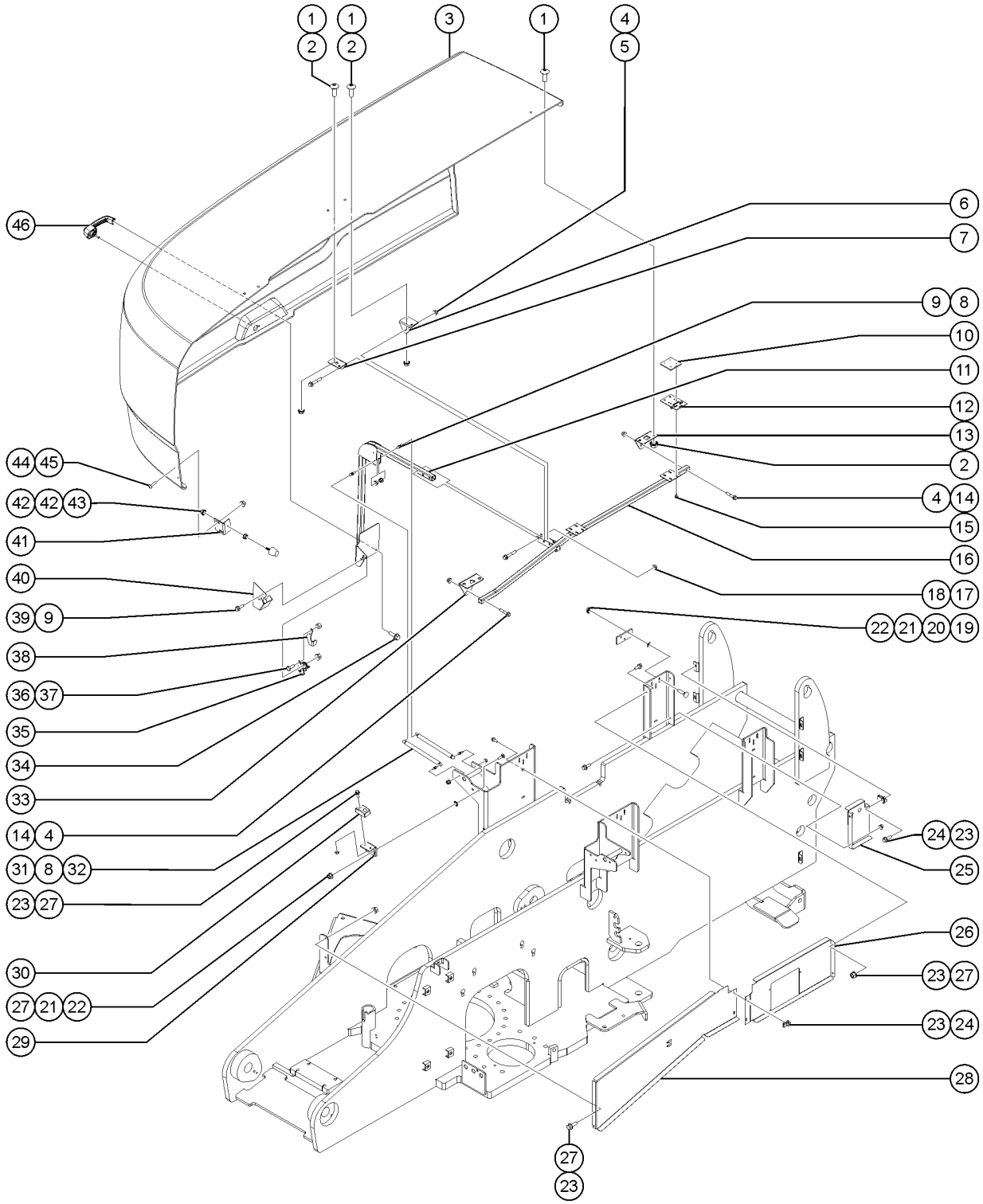

Item	Part No.	Description	Qty.
27	1277924GT	NUT,NYLOCK FLG,1/4-20,F,ZAG	10
28	1273342GT	FORMING, BULKHEAD, S60 TS REAR	1
29	1260162GT	FORMING, TS COVER CONTACT	1
30	1261266GT	BUMPER, COVER SUPPORT	1
31	28301GT	GAS STRUT,250 LBS FORCE***	2
32	1274167GT	NUT,NYLOCK FLG,5/16-18,F,ZAG	2
33	1258722GT	MOUNT, COVER SUPPORT REAR	1
34	231532GT	SCREW,HHF,M6-1.0X20,DIN6921,10.9,ZAB	2
35	215254GT	LATCH,ROTARY,ENGINE COVER	1
36	824059GT	SCREW, HHC, 1/4-20 X .75, 8, ZAG	2
37	824027GT	NUT, TL FLG, 1/4-20, G, ZAG	2
38	1262210GT	FORMING, LATCH TRIGGER, TS	1
39	1255763GT	SCREW,HHF,5/16-18X1.5,8,ZAG	2
40	1261244GT	FORMING,LATCH GUARD,TS	1
41	1254625GT	BRACKET, BUMPER	1
42	1255805GT	NUT,SERRATED,5/16-18,8,ZAG	2
43	1261277GT	RUBBER BUMPER, 1.25 X 1.25 IN	1
44	1261837GT	SCREW, THM, TORX, M6X25, ZAB	2
45	1283013GT	NUT,NYLOCK FLG,M6-1.0,DIN6926,10,ZAB	2
46	1256054GT	HANDLE, YELLOW LOCKING, CODE 455 includes item 34	1
46B	83093GT	KEY SINGLE*** sold separately	
46C	37947GT	KEYS,10 PACK*** sold separately	

309.1_Turntable Covers - Engine Side

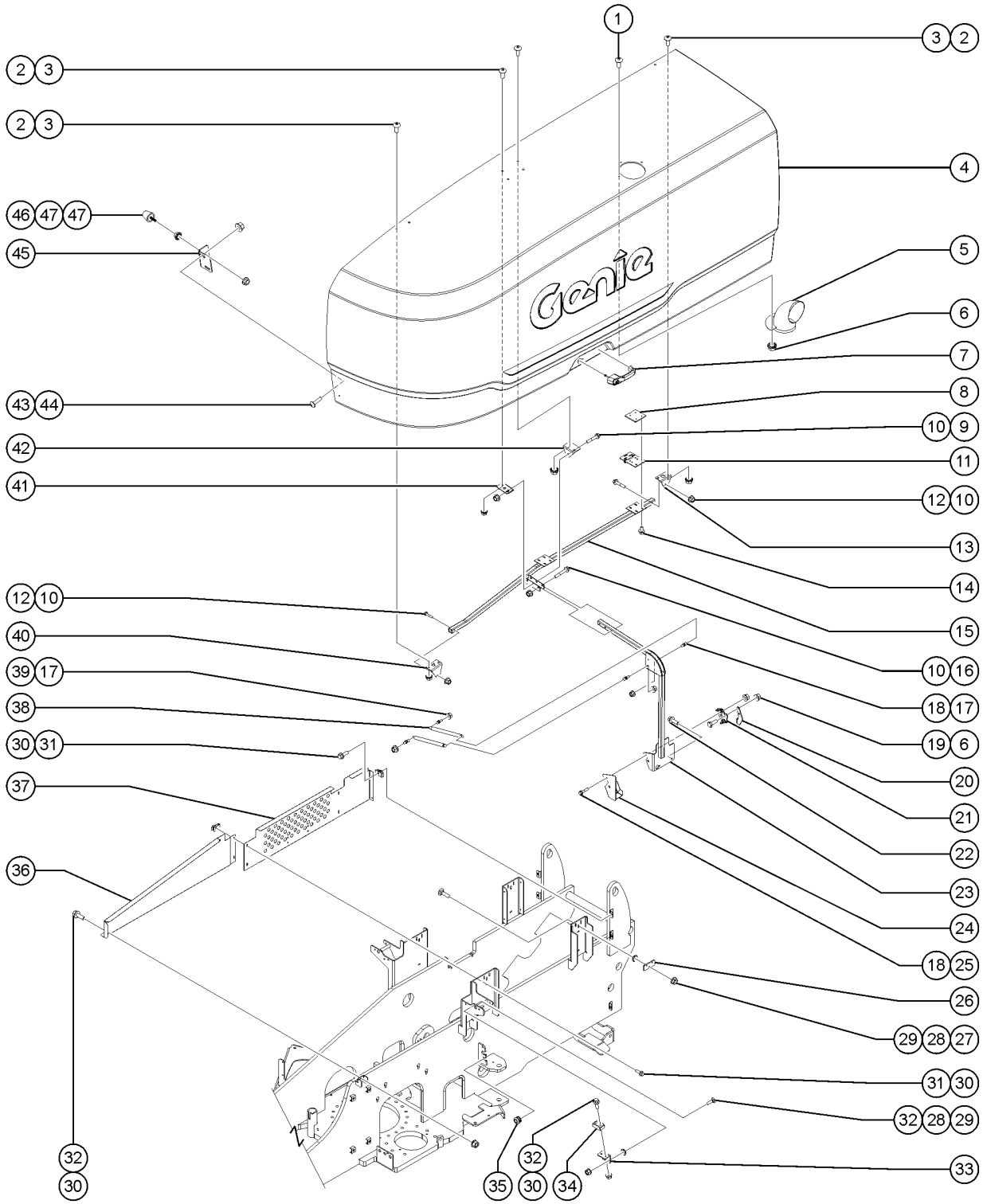

Item	Part No.	Description	Qty.
1	1261835GT	SCREW, THM, TORX, 1/4-20X1,SS	3
2	1261836GT	SCREW, THM, TORX, 3/8-16X1,SS	8
3	1257628GT	NUT,SERRATED,3/8-16,ZAG	8
4	1253271GT	ASSY ES SWING CHASSIS COVER (includes items 1-15, 22, 38, 40-47)	1
4-	1253264GT	COVER, SWING CHASSIS, ES	
5	101964GT	WELDMENT,EXHAUST TUBE	1
6	824027GT	NUT, TL FLG, 1/4-20, G, ZAG	5
7	1256054GT	HANDLE, YELLOW LOCKING, CODE 455 includes 231532	1
7-	231532GT	SCREW,HHF,M6-1.0X20,DIN6921,10.9,ZAB	
7B	83093GT	KEY SINGLE*** sold separately	
7C	37947GT	KEYS,10 PACK*** sold separately	
8	1258724GT	SUPPORT, TAPPED HINGE	2
9	1256856GT	SCREW,HHF,3/8-16X2.5,8,ZAG	1
10	824029GT	NUT, TL FLG, 3/8-16, G, ZAG	5
11	1278912GT	HINGE,.375X.120THK.,SLOTTED	2
12	1253478GT	SCREW,HHF,3/8-16X2,8,ZAG	2
13	1258723GT	MOUNT, COVER SUPPORT FRONT	1
14	1256855GT	SCREW,HHF,1/4-20X.625,8,ZAG	8
15	1256771GT	WLDMT, ES UPPER COVER SUPPORT	1
16	1256693GT	SCREW,HHF,3/8-16X2.25,8,ZAG	2
17	33555GT	BALL STUD**	4
18	824028GT	NUT, TL FLG, 5/16-18, G, ZAG	4
19	824059GT	SCREW, HHC, 1/4-20 X .75, 8, ZAG	2
20	1262211GT	FORMING, LATCH TRIGGER, ES	1
21	215254GT	LATCH,ROTARY,ENGINE COVER	1
22	231532GT	SCREW,HHF,M6-1.0X20,DIN6921,10.9,ZAB	2
23	1255987GT	WLDMT, ES LOWER COVER SUPPORT	1
24	1261245GT	FORMING,LATCH GUARD,ES	1

309.1_Turntable Covers - Engine Side

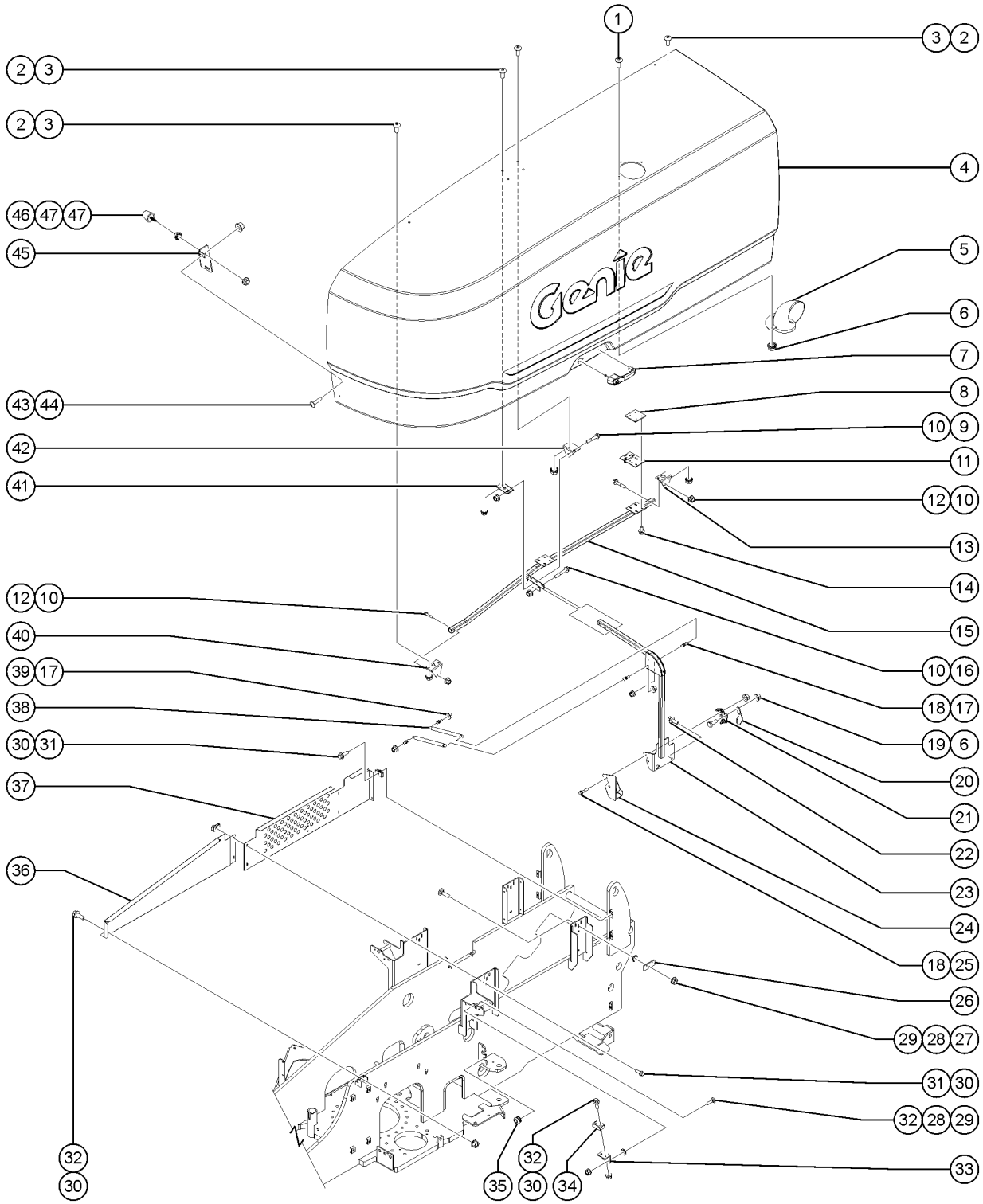

Item	Part No.	Description	Qty.
25	1255763GT	SCREW,HHF,5/16-18X1.5,8,ZAG	2
26	77778GT	PLATE,HINGE SUPPORT,BLUE PAINT	2
27	1256679GT	NUT,SERRATED,1/4-20,8,ZAG	6
28	238135GT	PUSHNUT RETAINER, 1/4" X 1/2"OD, ZINC	8
29	1256127GT	BOLT,CARRIAGE,1/4-20X1",GR 5,ZAG	8
30	824078GT	SCREW,HHF,1/4-20X.75,8,ZAG	9
31	56912GT	SPRING CLIP,1/4-20,.025-.15X.54,ZAG	4
32	1277924GT	NUT,NYLOCK FLG,1/4-20,F,ZAG	7
33	1260163GT	FORMING, ES COVER CONTACT	1
34	1261266GT	BUMPER, COVER SUPPORT	1
35	61189GT	GROMMET,RUBBER .75 X .38 X1.13	2
36	1273345GT	FORMING, BULKHEAD, S60 ES REAR	1
37	1273344GT	FORMING, BULKHEAD, S60 ES FRONT	1
38	28301GT	GAS STRUT,250 LBS FORCE***	2
39	1274167GT	NUT,NYLOCK FLG,5/16-18,F,ZAG	2
40	1258722GT	MOUNT, COVER SUPPORT REAR	1
41	1253830GT	MOUNT, COVER SUPPORT CTR 86DEG	1
42	1253831GT	MOUNT, COVER SUPPORT CTR 93DEG	1
43	1261837GT	SCREW, THM, TORX, M6X25, ZAB	2
44	231513GT	NUT,TL FLG,M6-1.0,DIN6927,10,ZAB	2
45	1254625GT	BRACKET, BUMPER	1
46	1261277GT	RUBBER BUMPER, 1.25 X 1.25 IN	1
47	1255805GT	NUT,SERRATED,5/16-18,8,ZAG	2

310.1 Wire Harness Diagram

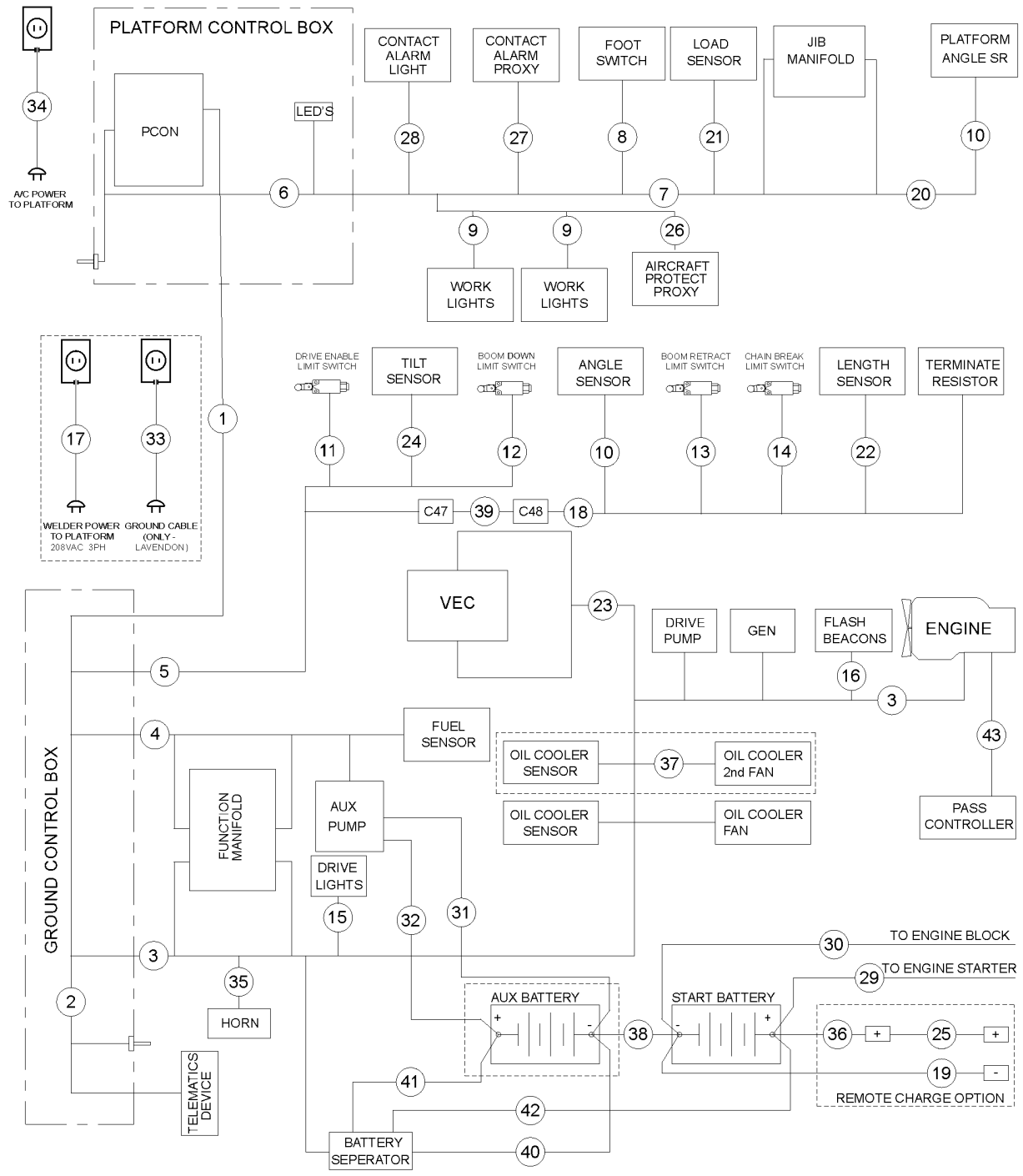

Item	Part No.	Description	Qty.
-	1269735GT	HARNESS, ENCLOSURE WELDER	1
-	28131GT	WIRE LOOM,1.25 DIA	13 inches
-	20973GT	WIRE LOOM,3/8 POLY SLIT	7 inches
-	1269721GT	HARNESS, PROX SENSOR,ACP	1
1	1313196GT	CABLE BOOM S65XC (Refer to 310_101)	1
1-	1314525GT	CABLE BOOM S60XC (Refer to 310_101B)	1
2	1290501GT	HARNESS, GBOX, ALC600, TELEMATICS 2.0 (Refer to 310_102A) to SNS65XCH-48423	1
2B	1309207GT	HARNESS GBOX, ALC600, TELEMATIC 2, HW (Refer to 310_102B) from SNS65XCH-48424	1
3	1278859GT	HARNESS S60/65XC DEUTZ 2.9 (Refer to 310_103), (to SN S65XCH-50224)	1
3B	1294547GT	HARNESS S60/65XC ENGINE DEUTZ TD 2011 (Refer to 310_103B)	1
3C	1279902GT	HARNESS, ENGINE, FORD (Refer to 310_103C)	1
3D	1283339GT	HARNESS, ENGINE, PERKINS 404D (Refer to 310_103D)	1
3E	1283340GT	HARNESS, ENGINE, PERKINS 404F (Refer to 310_103E)	1
3F	1293786GT	HARNESS, ENGINE, DEUTZ TD 2.2L	1
3G	1311887GT	HARNESS,DEUTZ D2.9 CN4,S65 XC (Refer to 310_144), (from SN S65XCH-50225)	1
4	1310742GT	HARNESS, FUNCTION MANIFOLD (Refer to 310_104)	1
5	1294541GT	HARNESS BOOM SENSORS GBOX SD (Refer to 310_105)	1
6	1306212GT	HARNESS, PBOX, ALC600, XC, EPL (Refer to 310_106)	1
6-	1269732GT	HARNESS, SWITCH, PROX, PCON (Refer to 310_106B),use until exhaust, replaced by 128203GT	1
6-	128203GT	SWITCH TOGGLE ASSY SPDT 2P MOM	1
7	1306608GT	HARNESS, PLATFORM, MANIFOLD, ALC600, EPL (Refer to 310_107)	1
8	227618GT	ASSEMBLY,FOOTSWITCH (Refer to 310_108)	1
9	1269720GT	HARNESS, LIGHTS, WORK (Refer to 310_109)	1
9-	1305837GT	ASSY,WORK LIGHT,LED 12V,45W (Refer to 310_109B)	1
10	1275778GT	ANGLE SENSOR,360DEG,CAN(R/B 1276511GT) (Refer to 310_110) (S-65 Only)	1
11	1294573GT	HARNESS, LST10, S60/65XC (Refer to 310_111)	1
12	1311698GT	HARNESS, LST3S, S60/65XC (Refer to 310_112)	1

310.1 Wire Harness Diagram

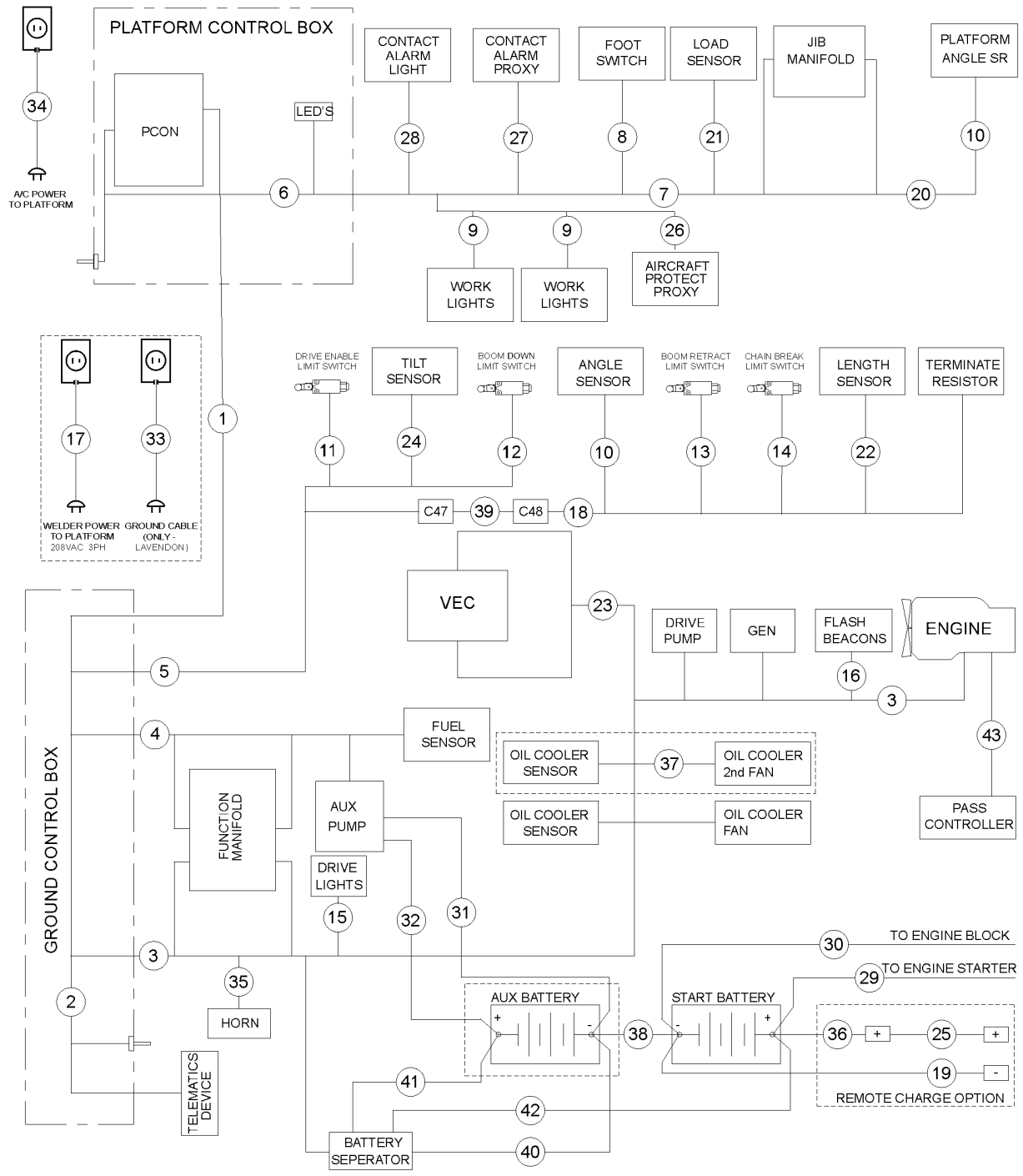

Item	Part No.	Description	Qty.
13	1269714GT	HARNESS, LSB1RS, S80/85 (Refer to 310_113)	1
14	1269717GT	HARNESS, LSB2S, S80/85 (Refer to 310_114)	1
15	1269724GT	HARNESS, LIGHTS, DRIVE (Refer to 310_115)	1
15-	1306812GT	ASSY,DRIVE LIGHT,12V LED (Refer to 310_115B)	1
16	1269729GT	HARNESS, BEACONS, FLASHING (Refer to 310_116)	1
17A	106115GT	WIRE CABLE 8 GA/4 CON.SO S60XC	936 inches
17B	106115GT	WIRE CABLE 8 GA/4 CON.SO S65XC	1008 inches
18	1287631GT	HARNESS, BOOM SENSORS,BOOM SD (Refer to 310_118)	1
19	1269061GT	CABLE ASSY, BLACK 2/0 (Refer to 310_119)	1
20	1306211GT	HARNESS, EXT CABLE, CAN SENSOR, 18/4C (Refer to 310_120) (S-65 Only)	1
21	1270278GT	LOAD CELL,J1939,650KG/1433LB (Refer to 310_121)	1
22	1278666GT	LENGTH TRANSDUCER, 400 IN, CAN ID 47 (Refer to 310_122), (to SN S65XCH-50230)	1
22B	1319559GT	LENGTH TRANSDUCER, 400 IN, CAN ID 47 (Refer to 310_122), (from SN S65XCH-50231)	1
23	1269738GT	MODULE, VEC, ALC600 (Refer to 310_123)	1
24	823368GT	SENSOR,LEVEL,UNIVERSAL (Refer to 310_124)	1
25	1269051GT	CABLE ASSY, RED 2/0 (Refer to 310_125)	1
26	1269734GT	HARNESS, PROX, MANIFOLD, PLAT (Refer to 310_126)	1
27	1278119GT	ASSEMBLY, SENSOR, PROX, CONTACT ALARM (Refer to 310_127)	1
28	1308384GT	ASSY, LIGHTS, 12/24 V CONTACT ALARM, AMBER (Refer to 310_128)	1
29	88801GT	BATTERY CABLE,POSITIVE,RED (Refer to 310_129)	1
29-	824849GT	BATTERY, CABLE POSITIVE, RED, T4	1
30	1291410GT	CABLE, BATTERY, NEG, S60/65 (Refer to 310_130)	1
30-	1291411GT	CABLE, JUMPER, GROUND, ENG (to SN S65XCH-49329)	1
31	121622GT	HARNESS,BATT2 TO APU(-),S80 (Refer to 310_131)	1
32	121619GT	HARNESS,BATT2 TO APU(+),S80 (Refer to 310_132)	1
33	1280844GT	ASSEMBLY, EARTH-LEAD, 50SQMM, 27M	1

310.1 Wire Harness Diagram

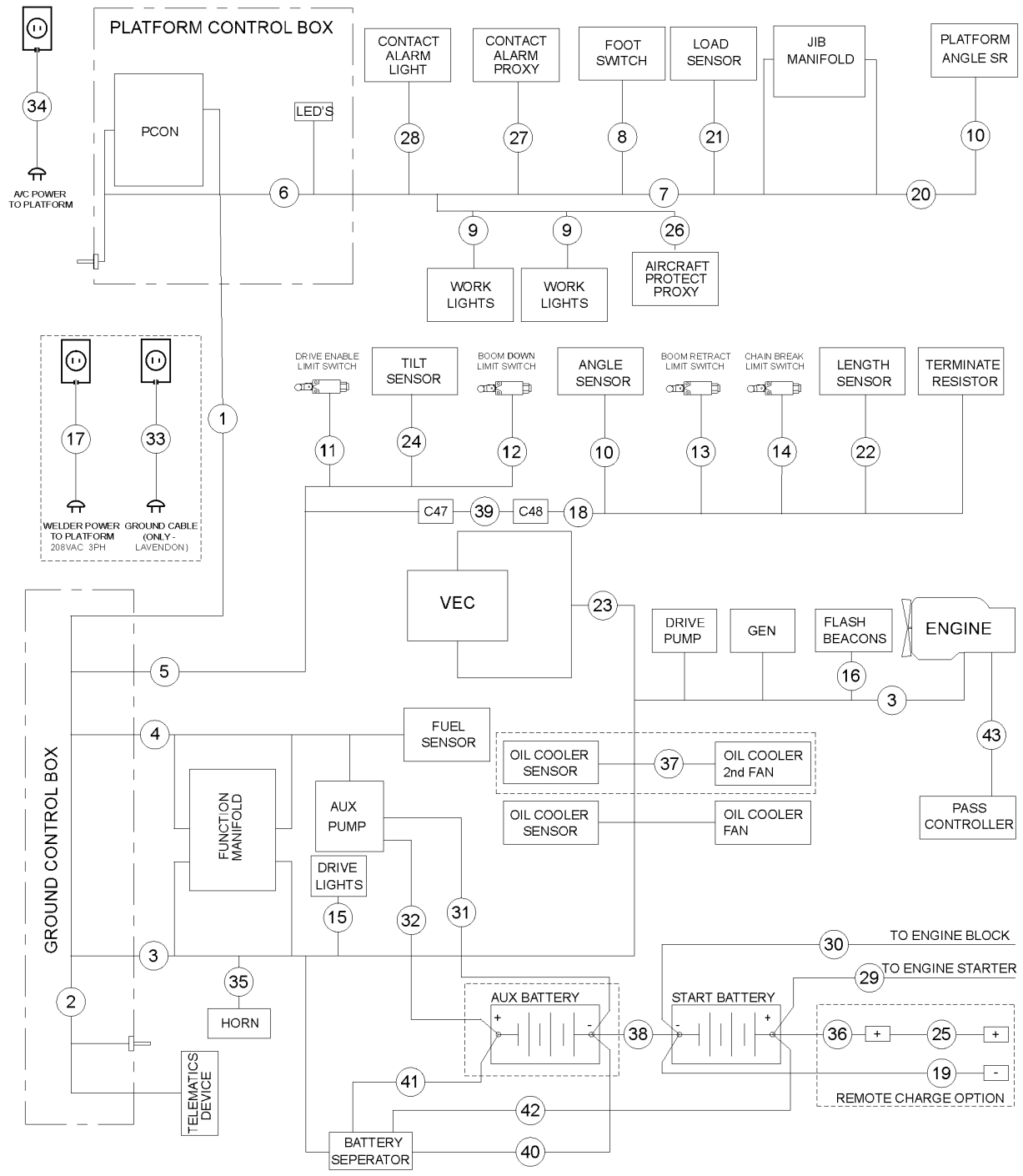

Item	Part No.	Description	Qty.
34	139731GT	HARNESS,AC POWER TO PLAT JIB (Refer to 310_134)	1
35	81578GT	HORN,12VDC,SPADE TERMINALS***	1
36	1269060GT	CABLE, RED 2/0, 20" (Refer to 310_136)	1
37	1283555GT	HARNESS,OIL COOLER,LIFTPOWER (Refer to 310_137)	1
38	106555GT	HARNESS,GND BATT 1 TO BATT 2 (Refer to 310_138)	1
39	1287630GT	HARNESS, BOOM SENSORS,LINK (Refer to 310_139)	1
40	88831GT	HARNESS,16 GA SEPERATOR TO GRD (Refer to 310_140)	1
41	106554GT	HARNESS,8GA BATT 2 TO SEPARATR (Refer to 310_141)	1
42	88804GT	HARNESS,APU+ TO BATT 2 (Refer to 310_142)	1
43	1311634GT	HARNESS PASS OPTION STG-V S65XC-Z62 (Refer to 310_143) for 1293786	1

310.101 Cable Boom S65XC

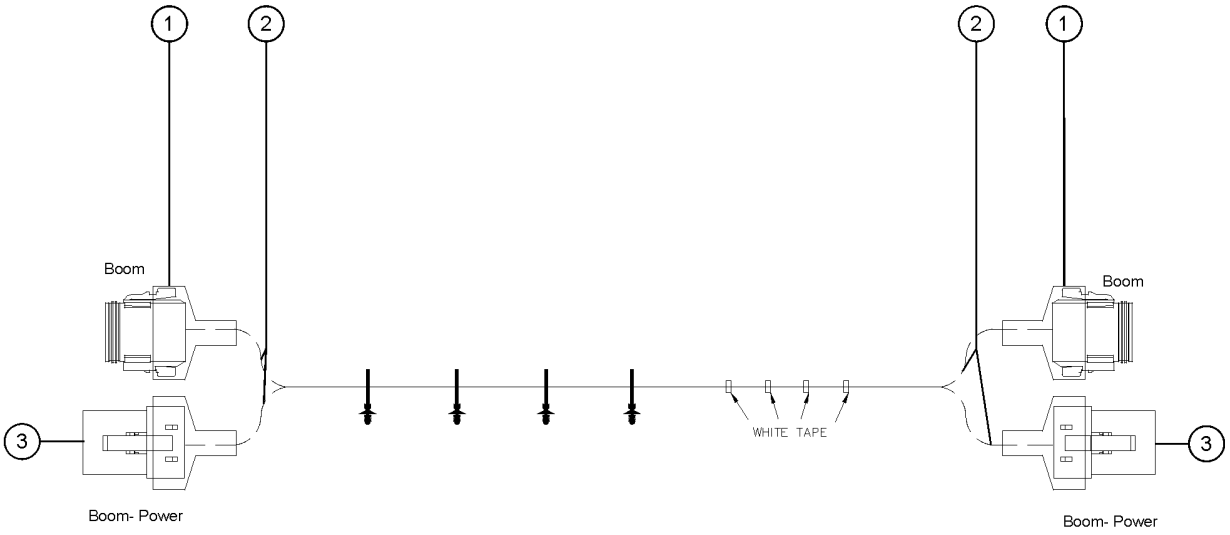

Item	*Part No.*	*Description*	*Qty.*
-	1313196GT	CABLE BOOM S65XC	10 10 Inches
1	119060GT	CONN, PLUG, 8 WAY, DEUTSCH, DT, ENDCAP/ GRAY	2
1-	60433GT	LOCK,PLUG 8 WAY, 14-18GA	2
2	20973GT	WIRE LOOM,3/8 POLY SLIT	24 Inches
3	60527GT	CONN, PLUG, 4 WAY, DEUTSCH, DTP	2
3-	60528GT	LOCK,PLUG 4 WAY,12-14GA***	2

310.101B Cable Boom S60XC

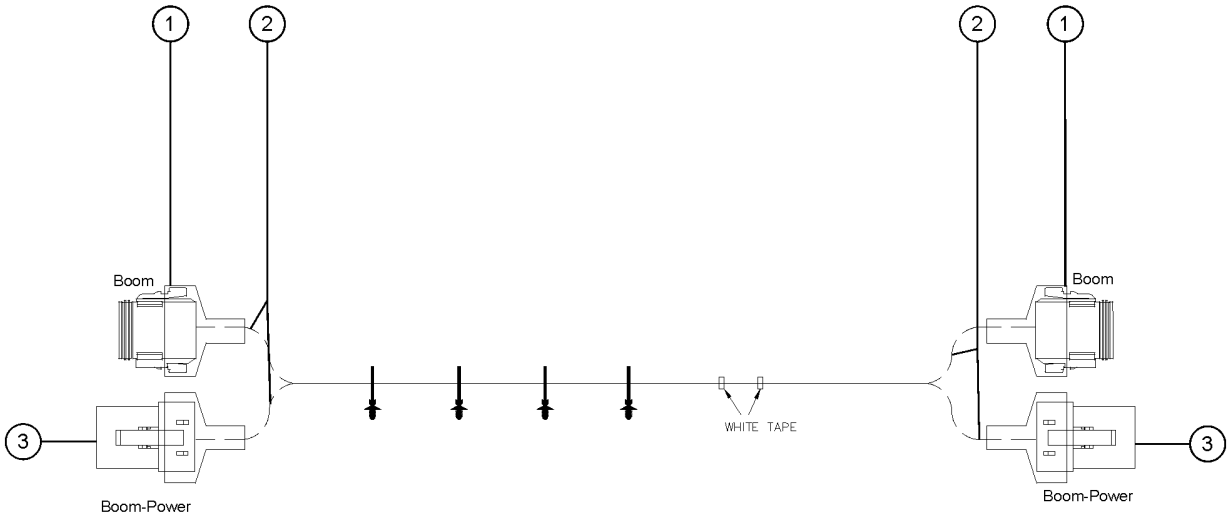

310.101B Cable Boom S60XC

Item	*Part No.*	*Description*	*Qty.*
-	1314525GT	CABLE BOOM S60XC	932
1	119060GT	CONN, PLUG, 8 WAY, DEUTSCH, DT, ENDCAP/ GRAY	2
1-	60433GT	LOCK,PLUG 8 WAY, 14-18GA	2
2	20973GT	WIRE LOOM,3/8 POLY SLIT	24 Inches
3	60527GT	CONN, PLUG, 4 WAY, DEUTSCH, DTP	2
3-	60528GT	LOCK,PLUG 4 WAY,12-14GA***	2

310.102A Harness, Gbox, ALC600, Telematics

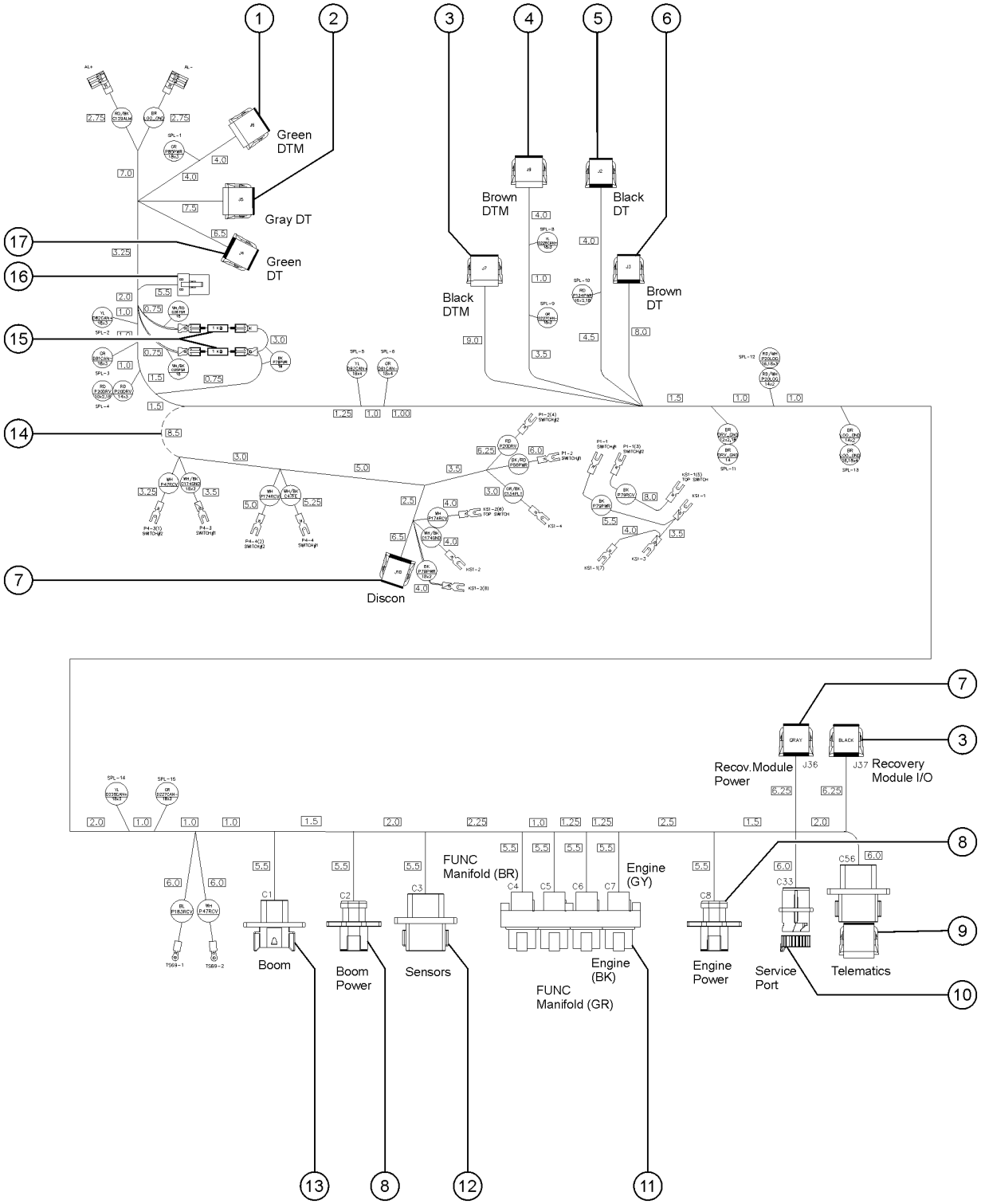

310.102A Harness, Gbox, ALC600, Telematics

Item	Part No.	Description	Qty.
-	1290501GT	HARNESS, GBOX, ALC600, TELEMATICS 2.0	1
1	1258100GT	CONN,PLUG 12D WAY DTM 18-20GA	1
1-	88332GT	LOCK,PLUG 12 WAY DTM 18-20GA	1
2	119061GT	CONN, PLUG, 12 WAY, DEUTSCH, DT, GRAY	1
2-	60435GT	LOCK, PLUG 12WAY, 14-18GA, GRN	1
3	106780GT	CONN, PLUG, 12 WAY, DEUTSCH, DTM, BLACK, KEY-B	2
3-	88332GT	LOCK,PLUG 12 WAY DTM 18-20GA	2
4	822250GT	CONN,PLUG 12C WAY DTM 18-20GA	1
4-	88332GT	LOCK,PLUG 12 WAY DTM 18-20GA	1
5	119062GT	CONN, PLUG, 12 WAY, DEUTSCH, DT, BLACK	1
5-	60435GT	LOCK, PLUG 12WAY, 14-18GA, GRN	1
6	119064GT	CONN PLUG 12 WAY ENDCAP DT BR	1
6-	60435GT	LOCK, PLUG 12WAY, 14-18GA, GRN	1
7	88331GT	CONN, PLUG, 12 WAY, DEUTSCH, DTM, GRAY, KEY-A	2
7-	88332GT	LOCK,PLUG 12 WAY DTM 18-20GA	2
8	73717GT	CONN, RECEP, 4 WAY, DEUTSCH, DTP, FLANGE	1
8-	60526GT	LOCK,RECEP 4 WAY,12-14GA	1
9	73730GT	CONN, RECEP, 12 WAY, DEUTSCH, DT, GRAY/FLANGE	2
10	1272122GT	CONN, RECEP, 5 WAY, DEUTSCH, HD10	1
11	73736GT	CONN,RECEP 48 WAY,4 X 12	1
11-	54255GT	LOCK, RECEP 12WAY, 14-18GA	1
12	73730GT	CONN, RECEP, 12 WAY, DEUTSCH, DT, GRAY/FLANGE	1
12-	54255GT	LOCK, RECEP 12WAY, 14-18GA	1
13	87755GT	CONN, RECEP, 8 WAY, DEUTSCH, DT, GRAY/FLANGE	1
13-	60447GT	LOCK,RECEP 8 WAY,14-18GA	1
14	94652GT	WIRE LOOM,1/2DIA.SLIT HI-TEMP*	8.5 Inches
15	1289592GT	RESISTOR, 1K, 25W to SN S65XCH-45770 (no longer produced for this harness)	2

310.102A Harness, Gbox, ALC600, Telematics

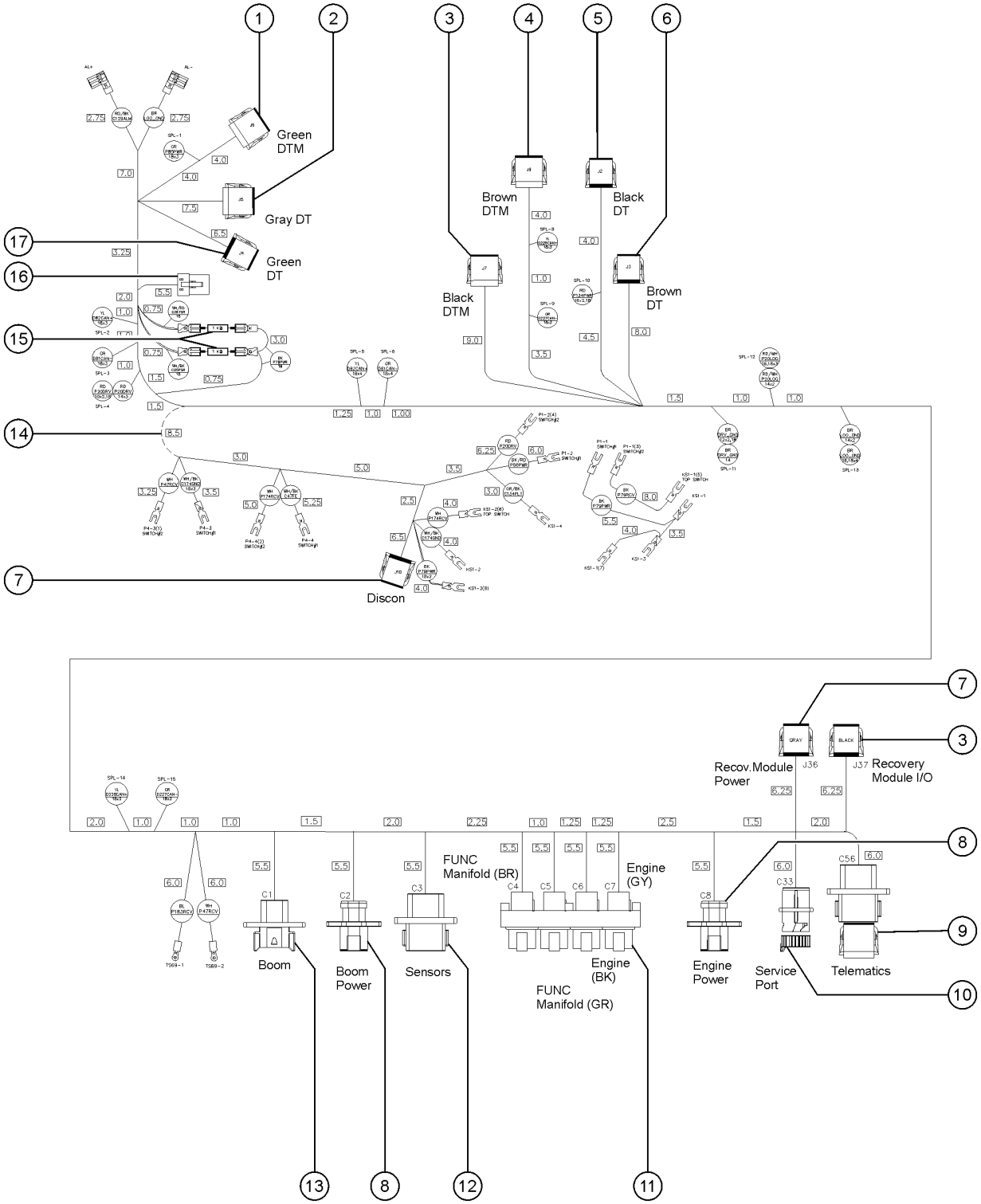

Item	Part No.	Description	Qty.
16	60527GT	CONN, PLUG, 4 WAY, DEUTSCH, DTP	2
16-	60528GT	LOCK,PLUG 4 WAY,12-14GA***	1
17	119063GT	CONN PLUG 12 WAY ENDCAP DT GR	1
17-	60435GT	LOCK, PLUG 12WAY, 14-18GA, GRN	1

310.102B HARNESS GBOX, ALC600, TELEMATIC 2, HW

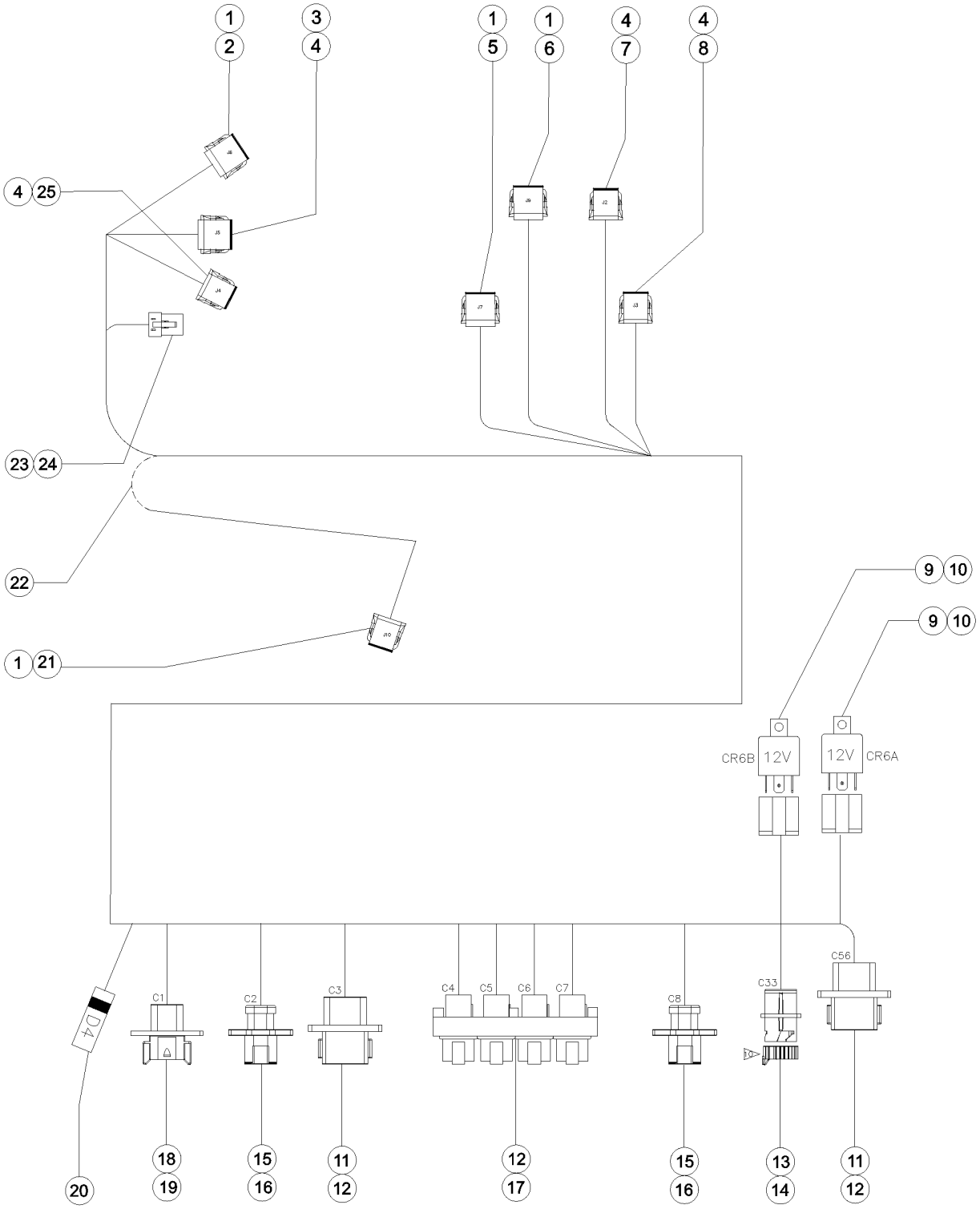

310.102B HARNESS GBOX, ALC600, TELEMATIC 2, HW

Item	Part No.	Description	Qty.
1	88332GT	LOCK,PLUG 12 WAY DTM 18-20GA	4
2	822250GT	CONN,PLUG 12C WAY DTM 18-20GA	1
3	119061GT	CONN, PLUG, 12 WAY, DEUTSCH, DT, GRAY	1
4	60435GT	LOCK, PLUG 12WAY, 14-18GA, GRN	4
5	106780GT	CONN, PLUG, 12 WAY, DEUTSCH, DTM, BLACK, KEY-B	1
6	1258100GT	CONN,PLUG 12D WAY DTM 18-20GA	1
7	119062GT	CONN, PLUG, 12 WAY, DEUTSCH, DT, BLACK	1
8	119064GT	CONN PLUG 12 WAY ENDCAP DT BR	1
9	19274GT	RELAY,SPDT,12V(AUTO)**	2
10	1310252GT	CONNECTOR, RELAY SOCKET, 5PIN	2
11	73730GT	CONN, RECEP, 12 WAY, DEUTSCH, DT, GRAY/FLANGE	2
12	54255GT	LOCK, RECEP 12WAY, 14-18GA	5
13	1272123GT	DUST CAP, RECEPTACLE, 5 WAY, CIRCULAR	1
14	1272122GT	CONN, RECEP, 5 WAY, DEUTSCH, HD10	1
15	73717GT	CONN, RECEP, 4 WAY, DEUTSCH, DTP, FLANGE	2
16	60526GT	LOCK,RECEP 4 WAY,12-14GA	2
17	73736GT	CONN,RECEP 48 WAY,4 X 12	1
18	60447GT	LOCK,RECEP 8 WAY,14-18GA	1
19	87755GT	CONN, RECEP, 8 WAY, DEUTSCH, DT, GRAY/FLANGE	1
20	56445GT	DIODE,6 AMP 200 PIV,REEL	4
21	88331GT	CONN, PLUG, 12 WAY, DEUTSCH, DTM, GRAY, KEY-A	1
22	94652GT	WIRE LOOM,1/2DIA.SLIT HI-TEMP* 8.5inch	1
23	60528GT	LOCK,PLUG 4 WAY,12-14GA***	1
24	60527GT	CONN, PLUG, 4 WAY, DEUTSCH, DTP	1
25	119063GT	CONN PLUG 12 WAY ENDCAP DT GR	1

310.103 HARNESS S60/65XC DEUTZ 2.9

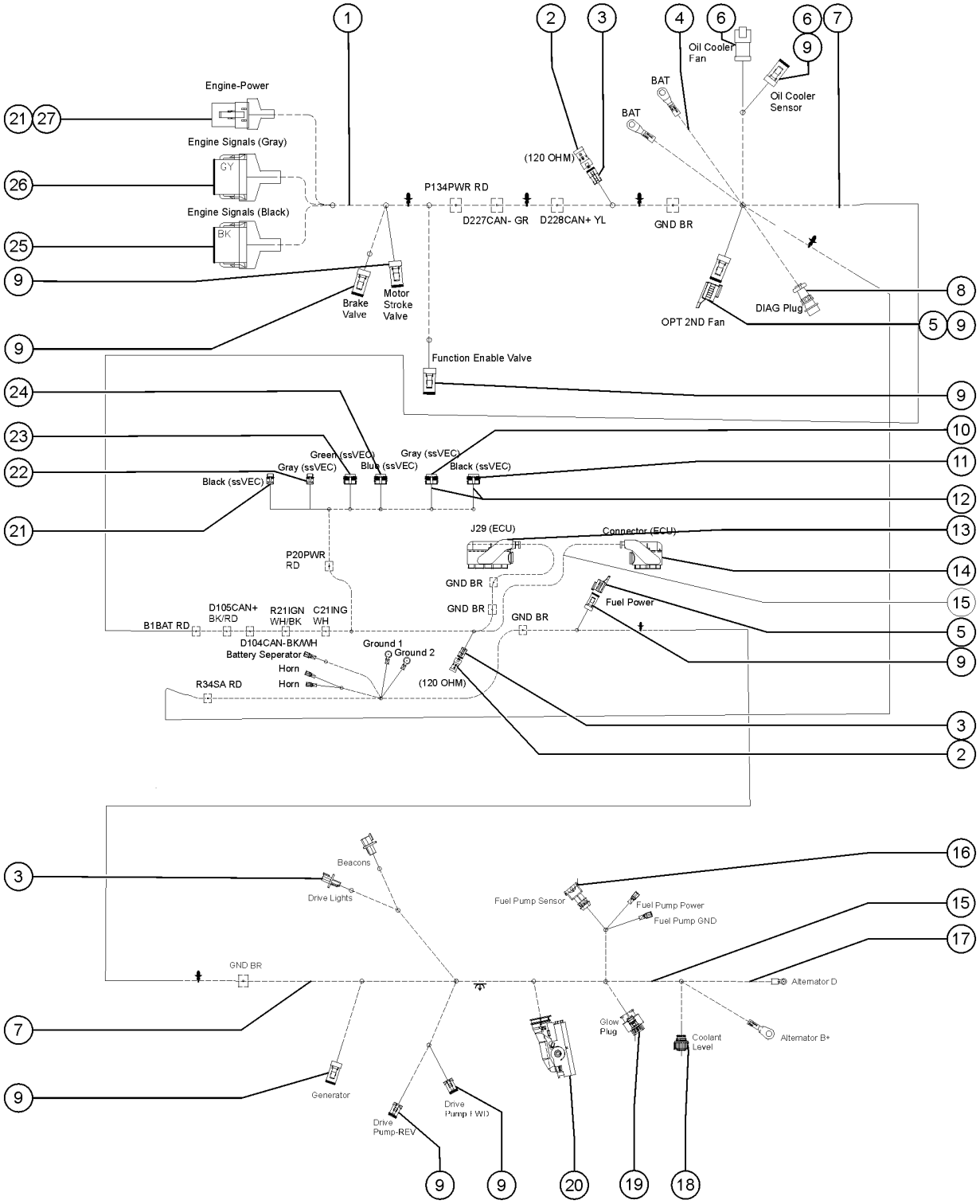

310.103 HARNESS S60/65XC DEUTZ 2.9

Item	Part No.	Description	Qty.
-	1278859GT	HARNESS S60/65XC DEUTZ 2.9	1
-	94652GT	WIRE LOOM,1/2DIA.SLIT HI-TEMP* no longer available use untilexhaust	9 Inches
1	101191GT	WIRE LOOM,1"DIA.SLIT,HI TEMP	65 Inches
1B	101191GT	WIRE LOOM,1"DIA.SLIT,HI TEMP	77 Inches
2	60452GT	CONN, RECEP, 3 WAY, DEUTSCH, DT, J1939/120OHM	2
3	119057GT	CONN, PLUG, 3 WAY, DEUTSCH, DT, ENDCAP	2
3-	60459GT	LOCK,PLUG 3 WAY,SAE J1939	
4	20973GT	WIRE LOOM,3/8 POLY SLIT	243 Inches
5	229110GT	CONN, RECEP, 2 WAY, DEUTSCH, DT, CAP	2
6	119065GT	CONN, RECEP, 2 WAY, DEUTSCH, DT	1
6-	60439GT	CONN, RECEP, 2 WAY, DEUTSCH, DT, LOCK	1
7	150103GT	WIRE LOOM,1.25"NYLON,HIGH TEMP	131 Inches
8	822448GT	CONN,REC,CANN TR 12WAY,SIZE14	1
9	119056GT	CONN, PLUG, 2 WAY, DEUTSCH, DT, ENDCAP	9
9-	60425GT	CONN, PLUG, 2 WAY, DEUTSCH, DT, LOCK	9
10	822438GT	CONN KIT,RECEP 60POS,AMP MQS 1.5	1
11	822468GT	CONN,2WAY CBT MALE,GRAY	1
11-	822469GT	LOCK,2WAY CBT TP2 SEALED	
12	822462GT	CONN, PLUG, 8 WAY, EATON, METRI-PACK 150, BLUE	1
12-	822466GT	LOCK,8WAY CBT TP2 SEALED	1
13	822464GT	CONN,8WAY CBT MALE,BLACK	1
13-	822466GT	LOCK,8WAY CBT TP2 SEALED	1
14	822439GT	CONN KIT,94POS,AMP MQS1.5/MCP2.8	1
15	1261898GT	WIRE LOOM 3/4 DIA SLIT HI TEMP	15 Inches

310.103 HARNESS S60/65XC DEUTZ 2.9

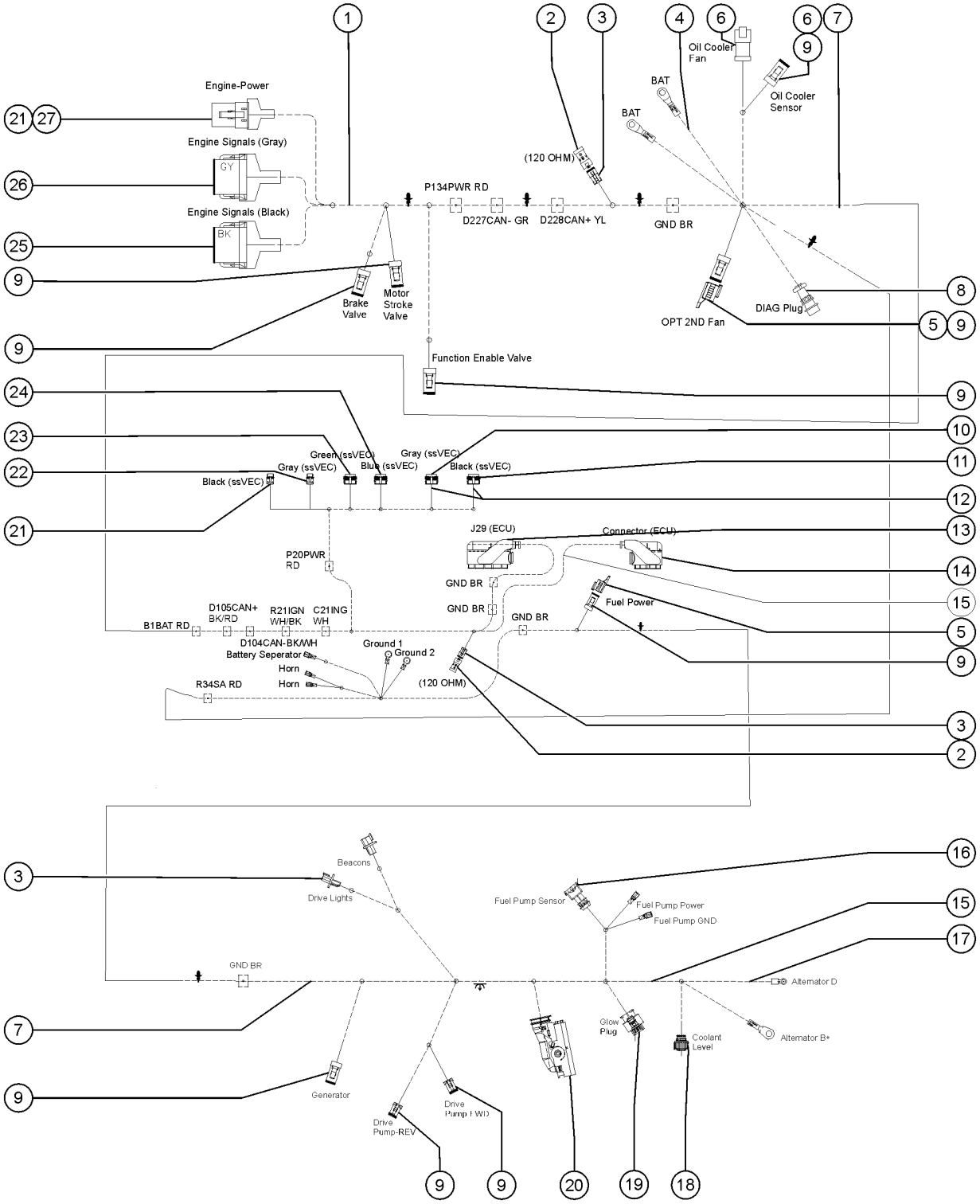

310.103 HARNESS S60/65XC DEUTZ 2.9

Item	Part No.	Description	Qty.
16	56687GT	CONN, RECEP, 2 WAY, AMP, JR-PWR	1
17	99087GT	WIRE LOOM,1/4 DIA. SLIT	9 Inches
17B	99087GT	WIRE LOOM,1/4 DIA. SLIT	29 Inches
18	822445GT	CONN,CIRC. AMP 4WAY,BLACK	1
19	822442GT	CONN,REC 2 WAY,AMP 8MM NGI, BLACK	1
20	822436GT	CONN,RECEP 62POS,AMP MCP1.5K/2.8	1
21	1269704GT	CONNECTOR, RECEP, 2WAY, FL	1
21-	60439GT	CONN, RECEP, 2 WAY, DEUTSCH, DT, LOCK	1
22	822465GT	CONN,8WAY CBT MALE,GRAY	1
22-	822466GT	LOCK,8WAY CBT TP2 SEALED	1
22B	822467GT	CONN,2WAY CBT MALE,BLACK	1
22B-	822469GT	LOCK,2WAY CBT TP2 SEALED	
23	822463GT	CONN,8WAY CBT MALE,GREEN	1
23-	822466GT	LOCK,8WAY CBT TP2 SEALED	1
23-	822780GT	PLUG,CONN,DELPHI,GREEN	1
24	75629GT	CONN,RECEP 3 WAY,W/FLANGE	1
24-	60441GT	CONN, RECEP, 3 WAY, DEUTSCH, DT, LOCK	1
25	822463GT	CONN,8WAY CBT MALE,GREEN	1
25-	822466GT	LOCK,8WAY CBT TP2 SEALED	
26	119062GT	CONN, PLUG, 12 WAY, DEUTSCH, DT, BLACK	1
26-	60435GT	LOCK, PLUG 12WAY, 14-18GA, GRN	1
27	119061GT	CONN, PLUG, 12 WAY, DEUTSCH, DT, GRAY	1
27-	60435GT	LOCK, PLUG 12WAY, 14-18GA, GRN	1

310.103B HARNESS S60/65XC ENGINE DEUTZ TD 2011

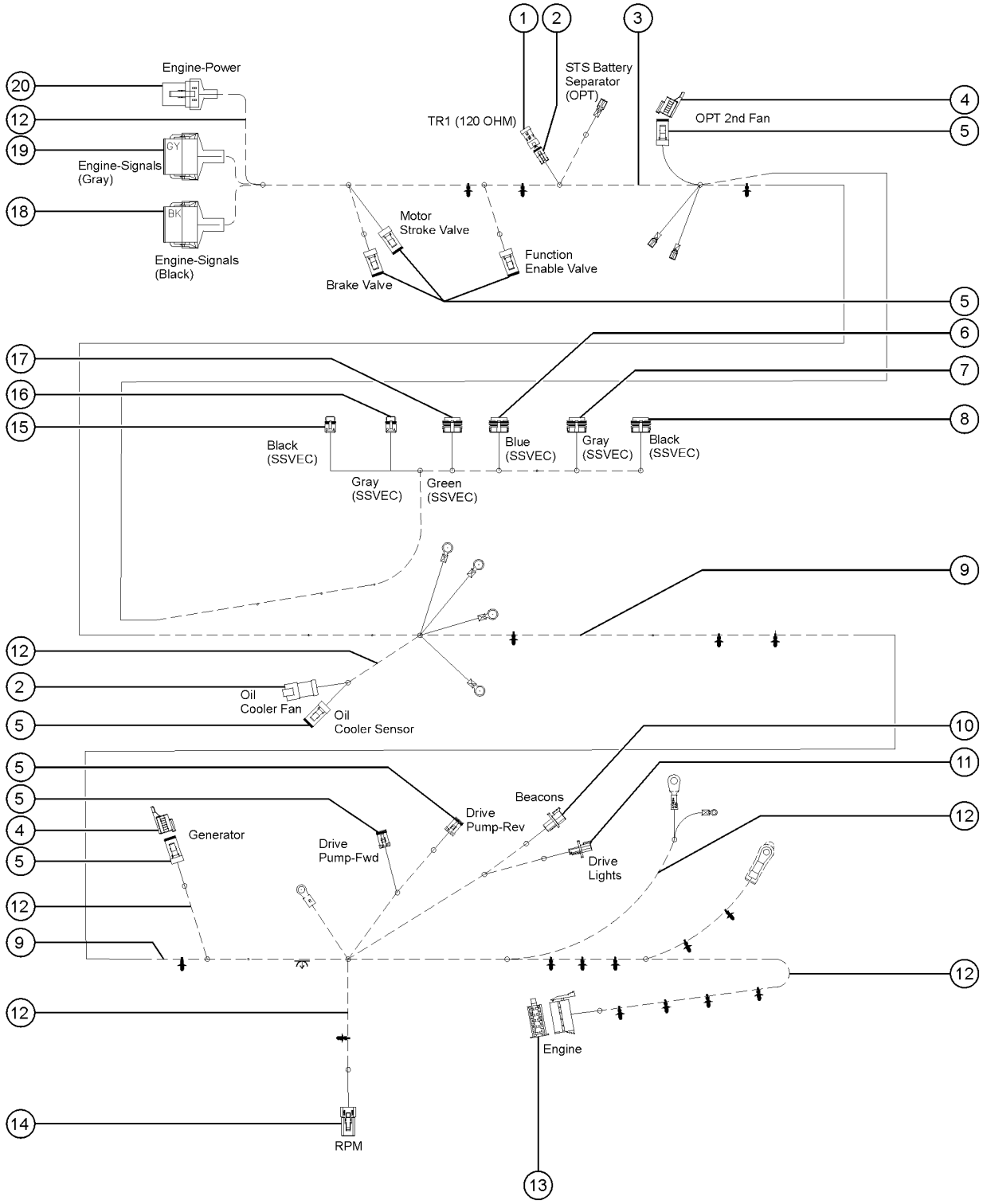

310.103B HARNESS S60/65XC ENGINE DEUTZ TD 2011

Item	Part No.	Description	Qty.
-	1294547GT	HARNESS S60/65XC ENGINE DEUTZ TD 2011	
1	60452GT	CONN, RECEP, 3 WAY, DEUTSCH, DT, J1939/120OHM	1
2	119057GT	CONN, PLUG, 3 WAY, DEUTSCH, DT, ENDCAP	2
2-	60459GT	LOCK,PLUG 3 WAY,SAE J1939	2
3	101191GT	WIRE LOOM,1"DIA.SLIT,HI TEMP	45 Inches
4	229110GT	CONN, RECEP, 2 WAY, DEUTSCH, DT, CAP	2
5	119056GT	CONN, PLUG, 2 WAY, DEUTSCH, DT, ENDCAP	8
5-	60425GT	CONN, PLUG, 2 WAY, DEUTSCH, DT, LOCK	8
6	822462GT	CONN, PLUG, 8 WAY, EATON, METRI-PACK 150, BLUE	1
6-	822466GT	LOCK,8WAY CBT TP2 SEALED	1
6-	822780GT	PLUG,CONN,DELPHI,GREEN	1
7	822465GT	CONN,8WAY CBT MALE,GRAY	1
7-	822466GT	LOCK,8WAY CBT TP2 SEALED	1
7-	822780GT	PLUG,CONN,DELPHI,GREEN	1
8	822464GT	CONN,8WAY CBT MALE,BLACK	1
8-	822466GT	LOCK,8WAY CBT TP2 SEALED	1
9	150103GT	WIRE LOOM,1.25"NYLON,HIGH TEMP	134 Inches
10	75629GT	CONN,RECEP 3 WAY,W/FLANGE	1
10-	60441GT	CONN, RECEP, 3 WAY, DEUTSCH, DT, LOCK	1
11	1269704GT	CONNECTOR, RECEP, 2WAY, FL	1
11-	60459GT	LOCK,PLUG 3 WAY,SAE J1939	1
12	20973GT	WIRE LOOM,3/8 POLY SLIT	157.3 Inches
13	1280592GT	CONNECTOR, 10 WAY, AMP	1
14	60531GT	CONN,PLUG 2 WAY,12-14GA	1
14-	60532GT	LOCK,PLUG 2 WAY,12-14GA	1
15	822467GT	CONN,2WAY CBT MALE,BLACK	1

310.103B HARNESS S60/65XC ENGINE DEUTZ TD 2011

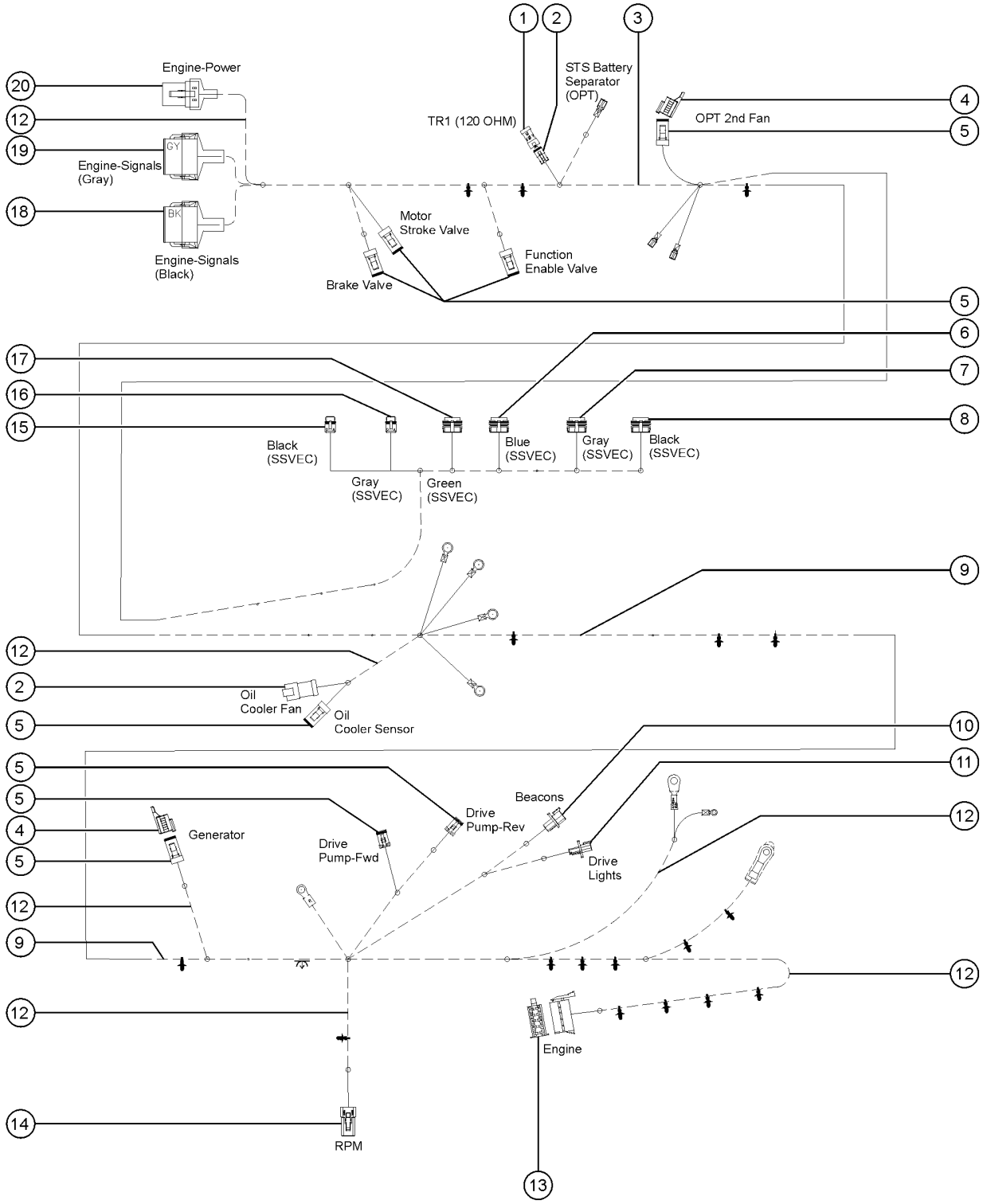

310.103B HARNESS S60/65XC ENGINE DEUTZ TD 2011

Item	Part No.	Description	Qty.
15-	822469GT	LOCK,2WAY CBT TP2 SEALED	1
16	822468GT	CONN,2WAY CBT MALE,GRAY	1
16-	822469GT	LOCK,2WAY CBT TP2 SEALED	1
17	822463GT	CONN,8WAY CBT MALE,GREEN	1
17-	822466GT	LOCK,8WAY CBT TP2 SEALED	1
17-	822780GT	PLUG,CONN,DELPHI,GREEN	1
18	119062GT	CONN, PLUG, 12 WAY, DEUTSCH, DT, BLACK	1
18-	60435GT	LOCK, PLUG 12WAY, 14-18GA, GRN	1
19	119061GT	CONN, PLUG, 12 WAY, DEUTSCH, DT, GRAY	1
19-	60435GT	LOCK, PLUG 12WAY, 14-18GA, GRN	1
20	60527GT	CONN, PLUG, 4 WAY, DEUTSCH, DTP	1
20-	60528GT	LOCK,PLUG 4 WAY,12-14GA***	1

310.103C HARNESS, ENGINE, FORD MSG425 T4, S60/65XC

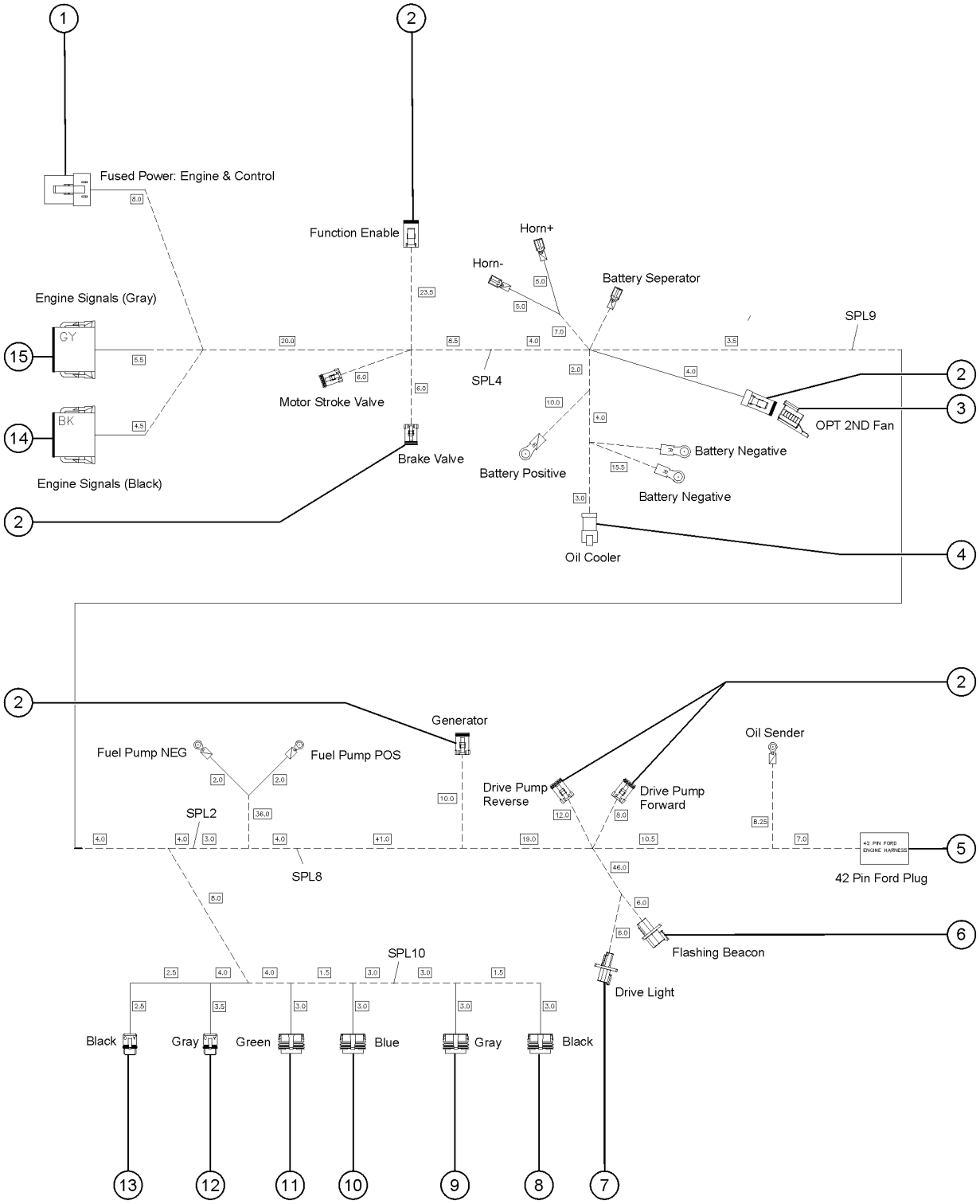

310.103C HARNESS, ENGINE, FORD MSG425 T4, S60/65XC

Item	Part No.	Description	Qty.
-	1279902GT	HARNESS, ENGINE, FORD	1
1	60527GT	CONN, PLUG, 4 WAY, DEUTSCH, DTP	1
1-	60528GT	LOCK,PLUG 4 WAY,12-14GA***	1
2	119056GT	CONN, PLUG, 2 WAY, DEUTSCH, DT, ENDCAP	8
2-	60425GT	CONN, PLUG, 2 WAY, DEUTSCH, DT, LOCK	8
3	229110GT	CONN, RECEP, 2 WAY, DEUTSCH, DT, CAP	1
4	119067GT	CONN, RECEP, 4 WAY, DEUTSCH, DT, ENDCAP	1
4-	60443GT	LOCK, RECEP 4WAY, 14-18GA	1
5	88756GT	CONN KIT,42 PIN FORD***	1
6	75629GT	CONN,RECEP 3 WAY,W/FLANGE	1
6-	60441GT	CONN, RECEP, 3 WAY, DEUTSCH, DT, LOCK	1
7	1269704GT	CONNECTOR, RECEP, 2WAY, FL	1
7-	60439GT	CONN, RECEP, 2 WAY, DEUTSCH, DT, LOCK	1
8	822464GT	CONN,8WAY CBT MALE,BLACK	1
8-	822466GT	LOCK,8WAY CBT TP2 SEALED	1
9	822465GT	CONN,8WAY CBT MALE,GRAY	1
9-	822466GT	LOCK,8WAY CBT TP2 SEALED	1
10	822462GT	CONN, PLUG, 8 WAY, EATON, METRI-PACK 150, BLUE	1
10-	822466GT	LOCK,8WAY CBT TP2 SEALED	1
11	822463GT	CONN,8WAY CBT MALE,GREEN	1
11-	822466GT	LOCK,8WAY CBT TP2 SEALED	1
12	822468GT	CONN,2WAY CBT MALE,GRAY	1
12-	822469GT	LOCK,2WAY CBT TP2 SEALED	1
13	822467GT	CONN,2WAY CBT MALE,BLACK	1
13-	822469GT	LOCK,2WAY CBT TP2 SEALED	1
14	119062GT	CONN, PLUG, 12 WAY, DEUTSCH, DT, BLACK	1
14-	60441GT	CONN, RECEP, 3 WAY, DEUTSCH, DT, LOCK	1
15	119061GT	CONN, PLUG, 12 WAY, DEUTSCH, DT, GRAY	1

310.103D HARNESS, ENGINE, PERKINS 404D

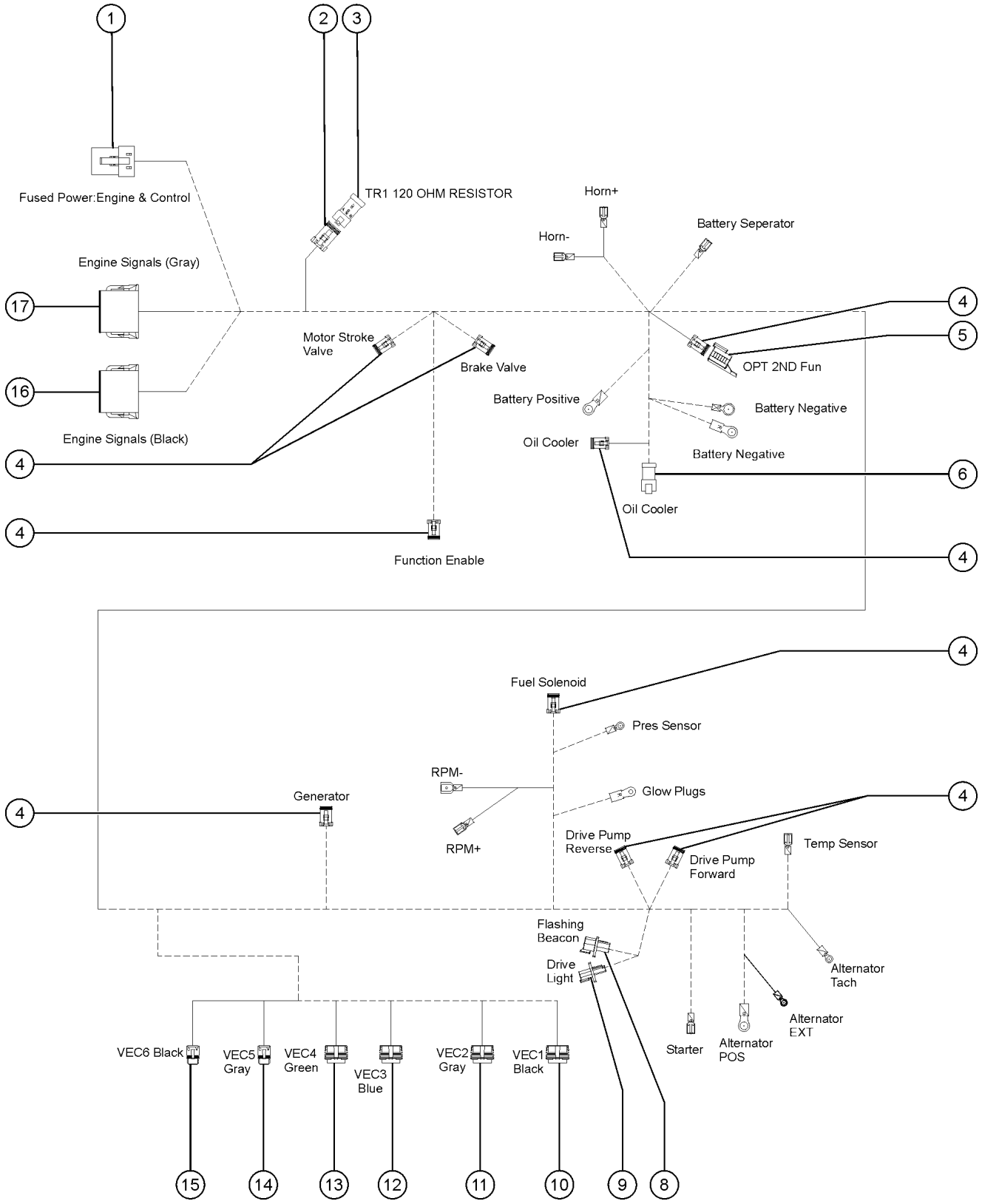

310.103D HARNESS, ENGINE, PERKINS 404D

Item	Part No.	Description	Qty.
-	1283339GT	HARNESS, ENGINE, PERKINS 404D	1
-	121657GT	FUSE HOLDER,ATC 1-20 AMPS	1
1	60527GT	CONN, PLUG, 4 WAY, DEUTSCH, DTP	1
1-	60528GT	LOCK,PLUG 4 WAY,12-14GA***	2
2	119057GT	CONN, PLUG, 3 WAY, DEUTSCH, DT, ENDCAP	1
2-	60459GT	LOCK,PLUG 3 WAY,SAE J1939	1
3	60452GT	CONN, RECEP, 3 WAY, DEUTSCH, DT, J1939/120OHM	1
4	119056GT	CONN, PLUG, 2 WAY, DEUTSCH, DT, ENDCAP	10
4-	60425GT	CONN, PLUG, 2 WAY, DEUTSCH, DT, LOCK	9
5	229110GT	CONN, RECEP, 2 WAY, DEUTSCH, DT, CAP	1
6	119065GT	CONN, RECEP, 2 WAY, DEUTSCH, DT	1
6-	60439GT	CONN, RECEP, 2 WAY, DEUTSCH, DT, LOCK	6
7	1279599GT	DIODE,SCHOTTKY 20A,P600	1
7-	60425GT	CONN, PLUG, 2 WAY, DEUTSCH, DT, LOCK	1
8	75629GT	CONN,RECEP 3 WAY,W/FLANGE	1
8-	60441GT	CONN, RECEP, 3 WAY, DEUTSCH, DT, LOCK	1
9	1269704GT	CONNECTOR, RECEP, 2WAY, FL	1
9-	60439GT	CONN, RECEP, 2 WAY, DEUTSCH, DT, LOCK	6
10	822464GT	CONN,8WAY CBT MALE,BLACK	1
10-	822466GT	LOCK,8WAY CBT TP2 SEALED	1
11	822465GT	CONN,8WAY CBT MALE,GRAY	1
11-	822466GT	LOCK,8WAY CBT TP2 SEALED	1
12	822462GT	CONN, PLUG, 8 WAY, EATON, METRI-PACK 150, BLUE	1
12-	822466GT	LOCK,8WAY CBT TP2 SEALED	1
13	822463GT	CONN,8WAY CBT MALE,GREEN	1
13-	822466GT	LOCK,8WAY CBT TP2 SEALED	1
14	822468GT	CONN,2WAY CBT MALE,GRAY	1
14-	822469GT	LOCK,2WAY CBT TP2 SEALED	1

310.103D HARNESS, ENGINE, PERKINS 404D

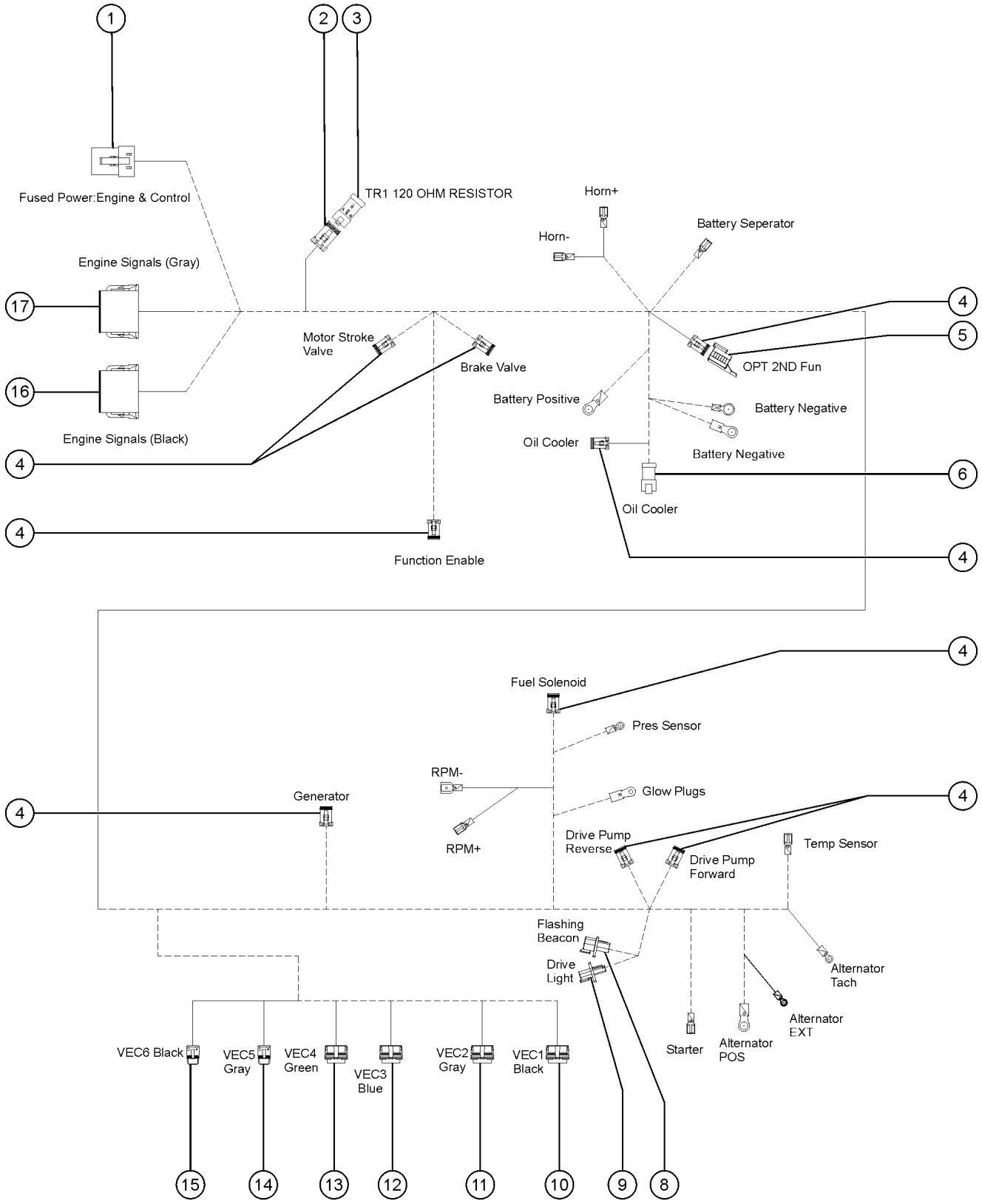

310.103D HARNESS, ENGINE, PERKINS 404D

Item	Part No.	Description	Qty.
15	822467GT	CONN,2WAY CBT MALE,BLACK	1
15-	822469GT	LOCK,2WAY CBT TP2 SEALED	1
16	119062GT	CONN, PLUG, 12 WAY, DEUTSCH, DT, BLACK	1
16-	60528GT	LOCK,PLUG 4 WAY,12-14GA***	1
17	119061GT	CONN, PLUG, 12 WAY, DEUTSCH, DT, GRAY	1
17-	60528GT	LOCK,PLUG 4 WAY,12-14GA***	1

310.103E HARNESS, ENGINE, PERKINS CRDI

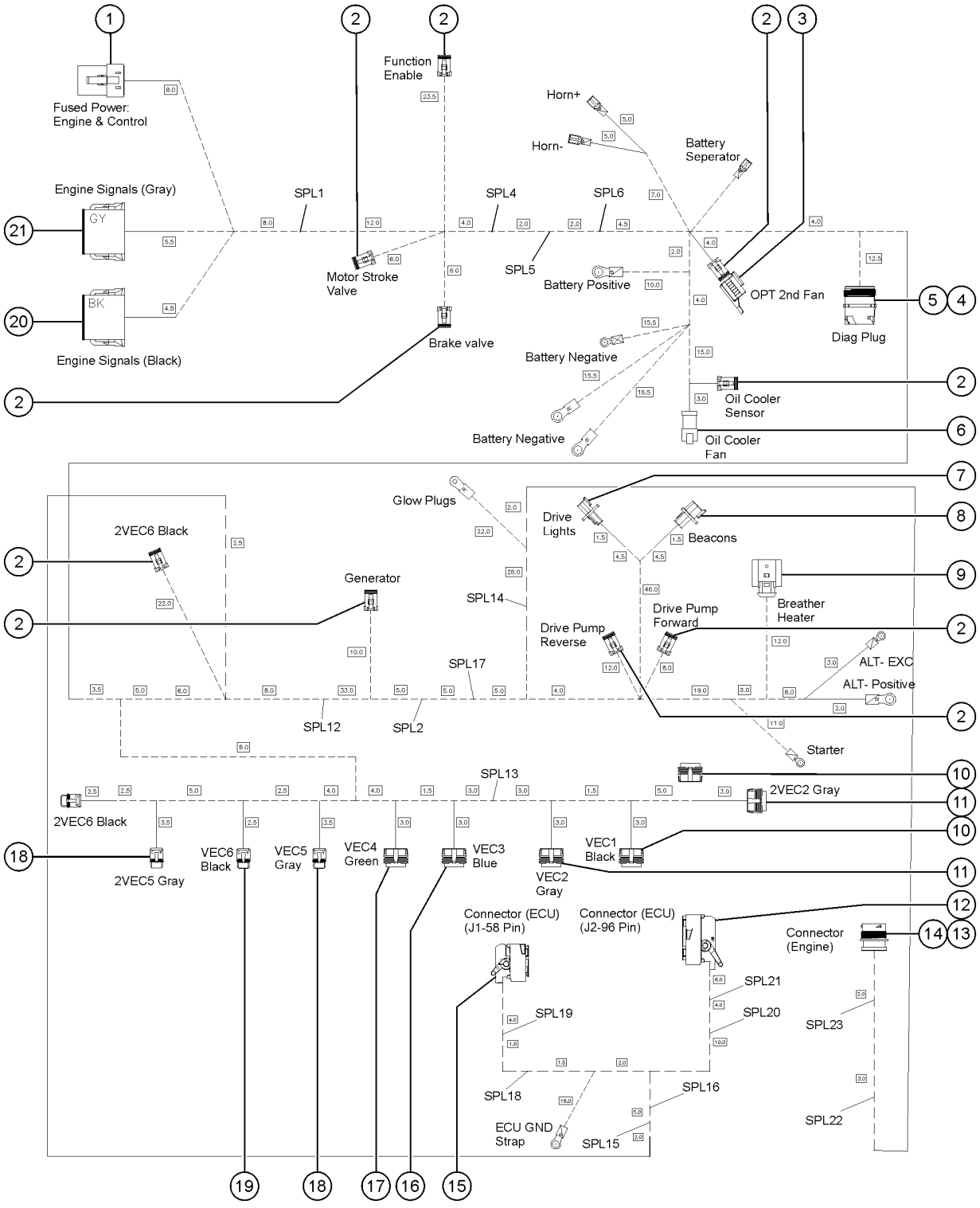

310.103E HARNESS, ENGINE, PERKINS CRDI

Item	Part No.	Description	Qty.
-	1283340GT	HARNESS, ENGINE, PERKINS 404F	1
1	60527GT	CONN, PLUG, 4 WAY, DEUTSCH, DTP	1
1-	60528GT	LOCK,PLUG 4 WAY,12-14GA***	1
2	119056GT	CONN, PLUG, 2 WAY, DEUTSCH, DT, ENDCAP	9
2-	60425GT	CONN, PLUG, 2 WAY, DEUTSCH, DT, LOCK	9
3	229110GT	CONN, RECEP, 2 WAY, DEUTSCH, DT, CAP	1
4	823053GT	CONN,DUST CAP,RECEP,9-WAY GRAY	1
5	823052GT	CONN,RECEP 9-WAY,FL. GRAY	1
6	119065GT	CONN, RECEP, 2 WAY, DEUTSCH, DT	1
6-	60439GT	CONN, RECEP, 2 WAY, DEUTSCH, DT, LOCK	1
7	1269704GT	CONNECTOR, RECEP, 2WAY, FL	1
7-	60439GT	CONN, RECEP, 2 WAY, DEUTSCH, DT, LOCK	1
8	75629GT	CONN,RECEP 3 WAY,W/FLANGE	1
8-	60441GT	CONN, RECEP, 3 WAY, DEUTSCH, DT, LOCK	1
9	1258096GT	CONN,PLUG,TYCO2.8MM,2-WAY	1
10	822464GT	CONN,8WAY CBT MALE,BLACK	2
10-	822466GT	LOCK,8WAY CBT TP2 SEALED	2
11	822465GT	CONN,8WAY CBT MALE,GRAY	2
11-	822466GT	LOCK,8WAY CBT TP2 SEALED	2
12	1284964GT	CONN, PLUG, 96 WAY	1
12-	1284966GT	LOCK, 1.2MM, TERM POS (96 WAY)	1
13	1284969GT	CONN, PLUG, 47 WAY, EIC	1
14	216388GT	CONN NUT PANEL HDP20 PLASTIC	1
14-	216372GT	LOCKWASHER, RECEP, HDP20	1
15	1284956GT	CONN, PLUG, 58 WAY	1
16	822462GT	CONN, PLUG, 8 WAY, EATON, METRI-PACK 150, BLUE	1
16-	822466GT	LOCK,8WAY CBT TP2 SEALED	1
17	822463GT	CONN,8WAY CBT MALE,GREEN	1

310.103E HARNESS, ENGINE, PERKINS CRDI

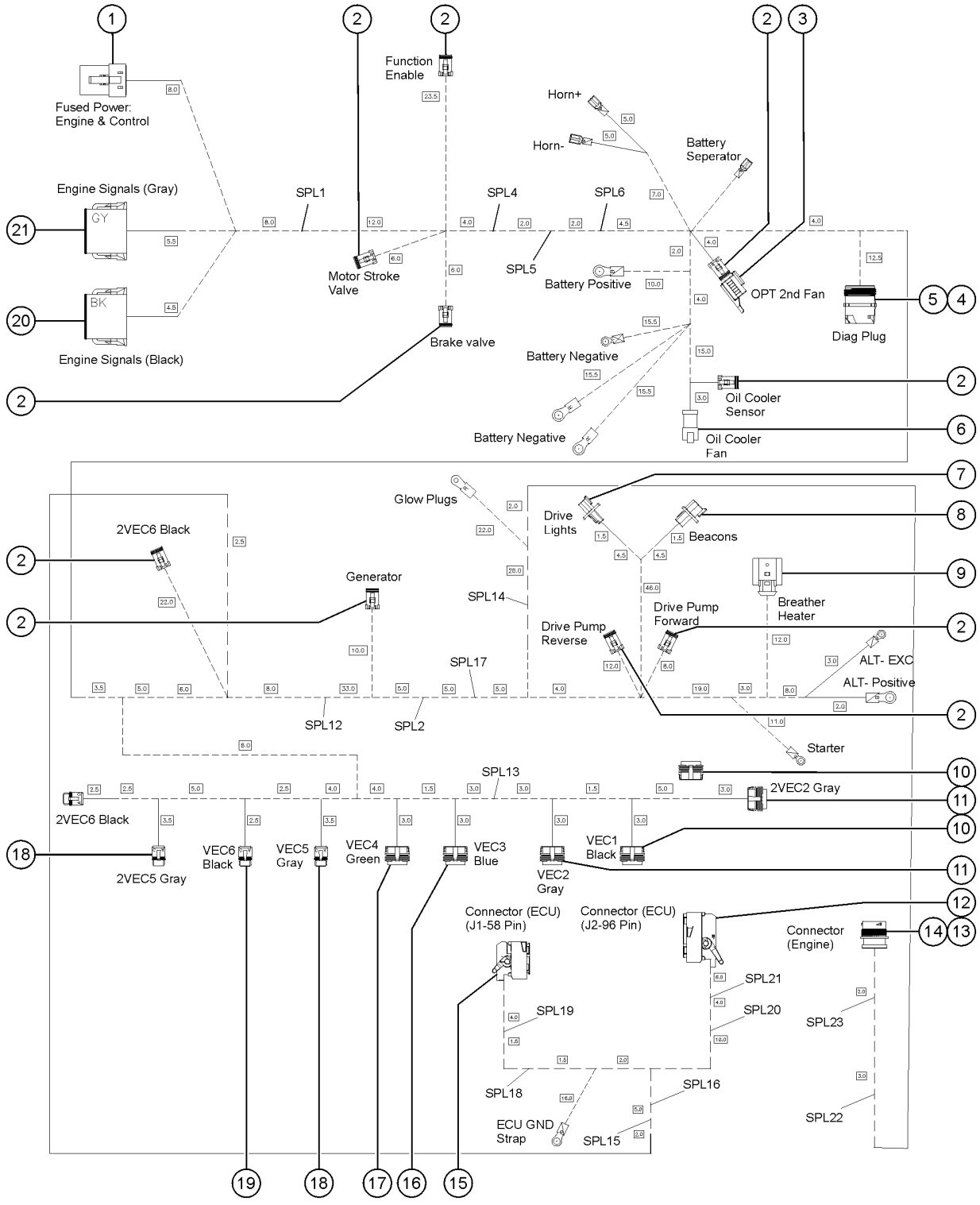

310.103E HARNESS, ENGINE, PERKINS CRDI

Item	Part No.	Description	Qty.
17-	822466GT	LOCK,8WAY CBT TP2 SEALED	1
18	822468GT	CONN,2WAY CBT MALE,GRAY	1
18-	822469GT	LOCK,2WAY CBT TP2 SEALED	1
19	822467GT	CONN,2WAY CBT MALE,BLACK	1
19-	822469GT	LOCK,2WAY CBT TP2 SEALED	1
20	119062GT	CONN, PLUG, 12 WAY, DEUTSCH, DT, BLACK	1
20-	60435GT	LOCK, PLUG 12WAY, 14-18GA, GRN	1
21	119061GT	CONN, PLUG, 12 WAY, DEUTSCH, DT, GRAY	1
21-	60435GT	LOCK, PLUG 12WAY, 14-18GA, GRN	1

310.104 HARNESS, FUNCTION MANIFOLD

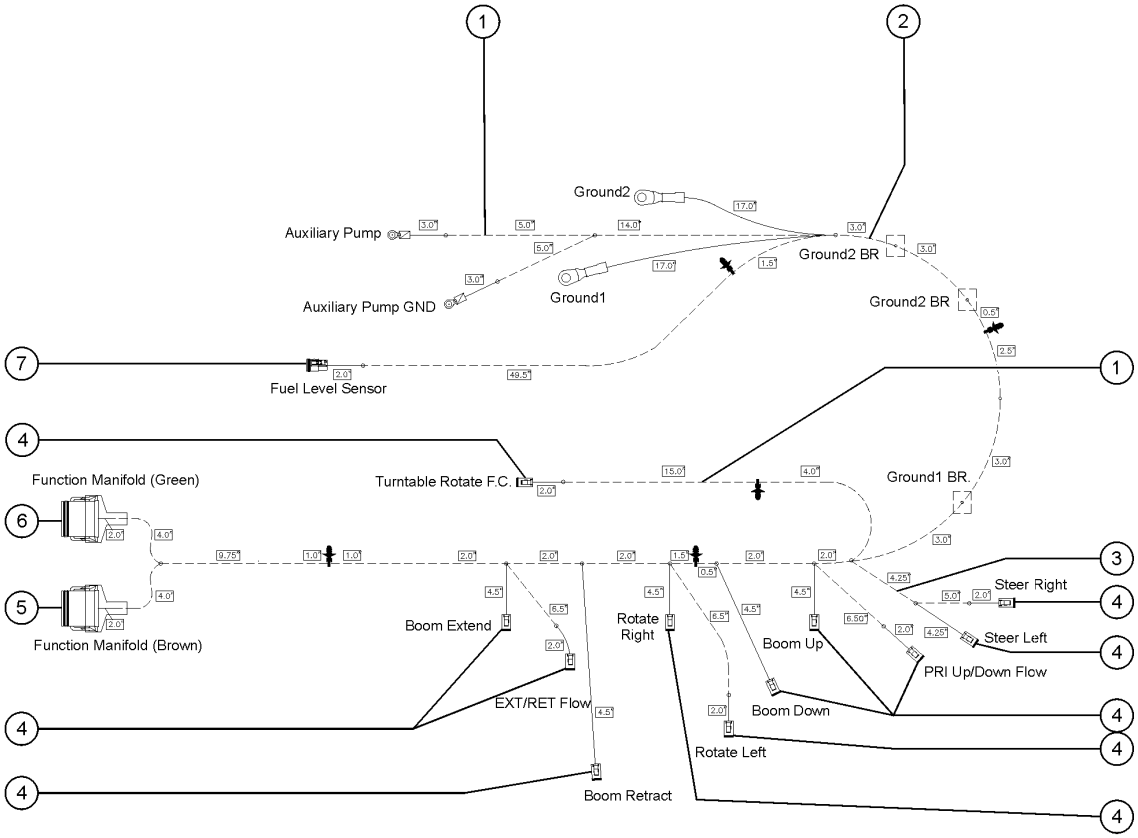

310.104 HARNESS, FUNCTION MANIFOLD

Item	Part No.	Description	Qty.
-	1310742GT	HARNESS, FUNCTION MANIFOLD	1
1	99087GT	WIRE LOOM,1/4 DIA. SLIT	61.25 Inches
2	75640GT	WIRE LOOM,3/4 DIA.	38.75 Inches
3	20973GT	WIRE LOOM,3/8 POLY SLIT	12 Inches
4	119056GT	CONN, PLUG, 2 WAY, DEUTSCH, DT, ENDCAP	11
4-	60425GT	CONN, PLUG, 2 WAY, DEUTSCH, DT, LOCK	11
5	119064GT	CONN PLUG 12 WAY ENDCAP DT BR	1
5-	60435GT	LOCK, PLUG 12WAY, 14-18GA, GRN	1
6	119063GT	CONN PLUG 12 WAY ENDCAP DT GR	1
6-	60435GT	LOCK, PLUG 12WAY, 14-18GA, GRN	1
7	60426GT	CONN,PLUG 3 WAY, 14-18GA	1
7-	60427GT	CONN, PLUG, 3 WAY, DEUTSCH, DT, LOCK	1

310.105 HARNESS BOOM SENSORS GBOX SD

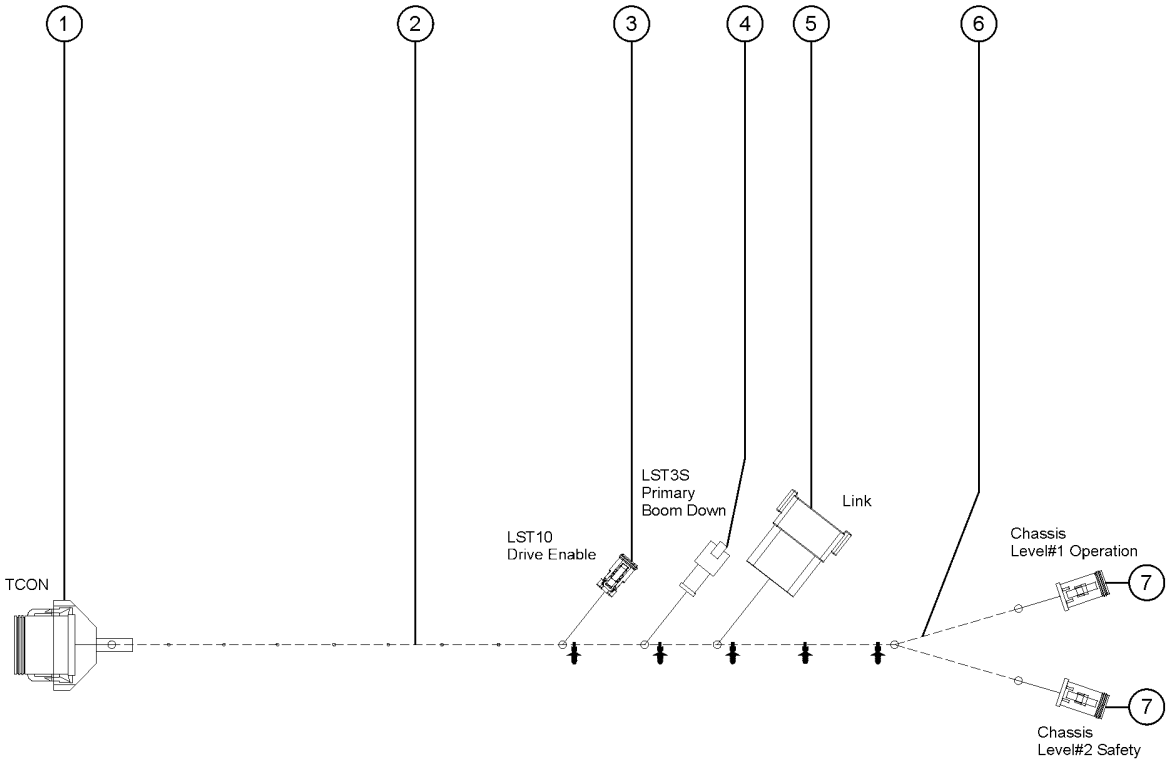

310.105 HARNESS BOOM SENSORS GBOX SD

Item	*Part No.*	*Description*	*Qty.*
-	1294541GT	HARNESS BOOM SENSORS GBOX SD	
1	119061GT	CONN, PLUG, 12 WAY, DEUTSCH, DT, GRAY	1
1-	60435GT	LOCK, PLUG 12WAY, 14-18GA, GRN	1
2	75640GT	WIRE LOOM,3/4 DIA.	78 Inches
3	119056GT	CONN, PLUG, 2 WAY, DEUTSCH, DT, ENDCAP	1
3-	60425GT	CONN, PLUG, 2 WAY, DEUTSCH, DT, LOCK	1
4	119065GT	CONN, RECEP, 2 WAY, DEUTSCH, DT	1
4-	60439GT	CONN, RECEP, 2 WAY, DEUTSCH, DT, LOCK	1
5	54254GT	CONN, RECEP 12WAY, 14-18GA	1
5-	54255GT	LOCK, RECEP 12WAY, 14-18GA	1
6	20973GT	WIRE LOOM,3/8 POLY SLIT	16 Inches
7	119058GT	CONN, PLUG, 4 WAY, DEUTSCH, DT, ENDCAP	2
7-	60429GT	LOCK, PLUG 4WAY, 14-18GA	2

310.106 HARNESS, PBOX, ALC600, XC, EPL

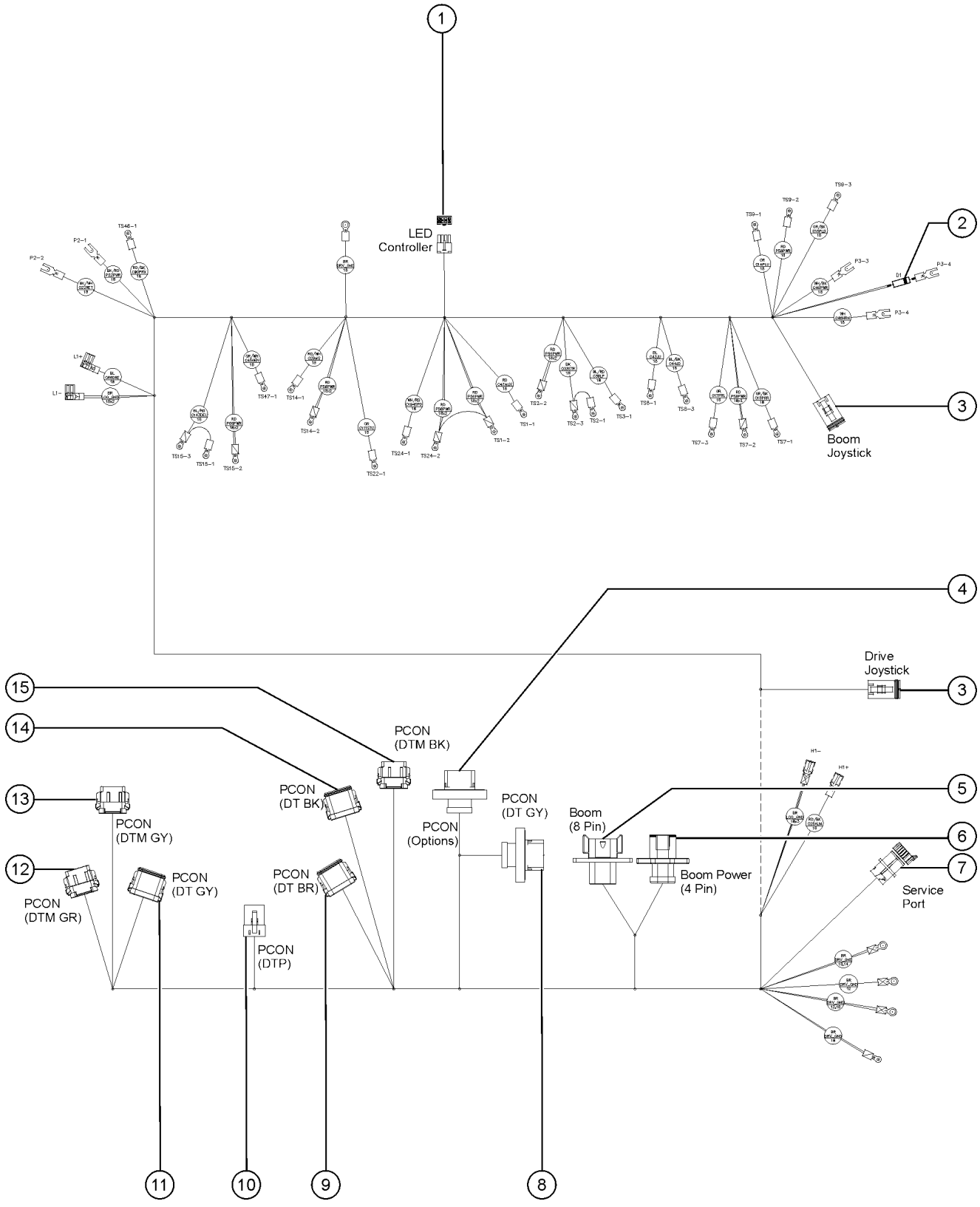

310.106 HARNESS, PBOX, ALC600, XC, EPL

Item	Part No.	Description	Qty.
-	1306212GT	HARNESS, PBOX, ALC600, XC, EPL	1
1	110654GT	CONN, PLUG, 8 WAY, MOLEX	1
2	56445GT	DIODE,6 AMP 200 PIV,REEL	
3	99343GT	CONNECTOR,PLUG 6 WAY 18-20 GA	2
3-	99344GT	LOCK,PLUG 6 WAY 18-20GA	2
4	226948GT	CONN, RECEP, 18 WAY, DEUTSCH, DTV, BLACK/FLANGE	1
4-	226388GT	LOCK,SECONDARY,DEUT,WV-18P	1
5	87755GT	CONN, RECEP, 8 WAY, DEUTSCH, DT, GRAY/FLANGE	1
5-	60447GT	LOCK,RECEP 8 WAY,14-18GA	1
6	73717GT	CONN, RECEP, 4 WAY, DEUTSCH, DTP, FLANGE	1
6-	60526GT	LOCK,RECEP 4 WAY,12-14GA	1
7	1272122GT	CONN, RECEP, 5 WAY, DEUTSCH, HD10	1
7-	1272123GT	DUST CAP, RECEPTACLE, 5 WAY, CIRCULAR	1
8	1265862GT	CONN, RECEP, 18 WAY, DEUTSCH, DTV, GRAY/FLANGE	1
8-	226388GT	LOCK,SECONDARY,DEUT,WV-18P	1
9	119064GT	CONN PLUG 12 WAY ENDCAP DT BR	1
9-	60435GT	LOCK, PLUG 12WAY, 14-18GA, GRN	1
10	60527GT	CONN, PLUG, 4 WAY, DEUTSCH, DTP	1
10-	60528GT	LOCK,PLUG 4 WAY,12-14GA***	1
11	119061GT	CONN, PLUG, 12 WAY, DEUTSCH, DT, GRAY	1
11-	60435GT	LOCK, PLUG 12WAY, 14-18GA, GRN	1
12	822250GT	CONN,PLUG 12C WAY DTM 18-20GA	1
12-	88332GT	LOCK,PLUG 12 WAY DTM 18-20GA	1
13	88331GT	CONN, PLUG, 12 WAY, DEUTSCH, DTM, GRAY, KEY-A	1
13-	88332GT	LOCK,PLUG 12 WAY DTM 18-20GA	1
14	119062GT	CONN, PLUG, 12 WAY, DEUTSCH, DT, BLACK	1
14-	60435GT	LOCK, PLUG 12WAY, 14-18GA, GRN	1
15	106780GT	CONN, PLUG, 12 WAY, DEUTSCH, DTM, BLACK, KEY-B	1

310.106 HARNESS, PBOX, ALC600, XC, EPL

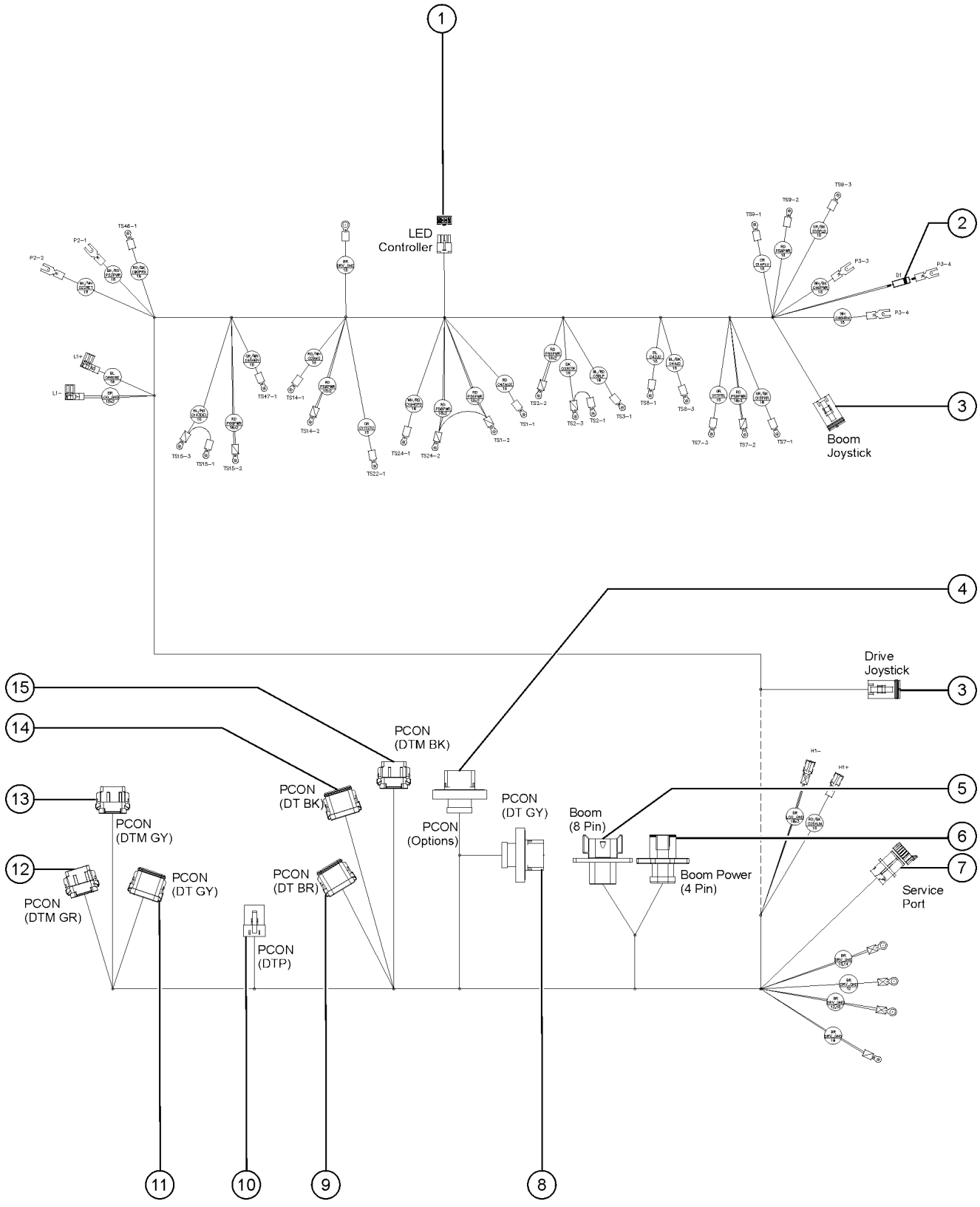

310.106 HARNESS, PBOX, ALC600, XC, EPL

Item	Part No.	Description	Qty.
15-	88332GT	LOCK,PLUG 12 WAY DTM 18-20GA	1

310.106B HARNESS, SWITCH, PROX, PCON

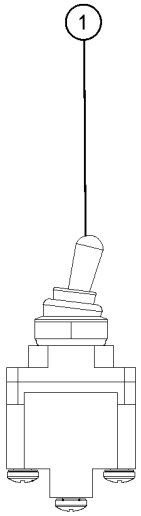

310.106B HARNESS, SWITCH, PROX, PCON

Item	*Part No.*	*Description*	*Qty.*
-	1269732GT	HARNESS, SWITCH, PROX, PCON	1
1	128203GT	SWITCH TOGGLE ASSY SPDT 2P MOM	1

310.107 HARNESS, PLATFORM, MANIFOLD, ALC600, EPL

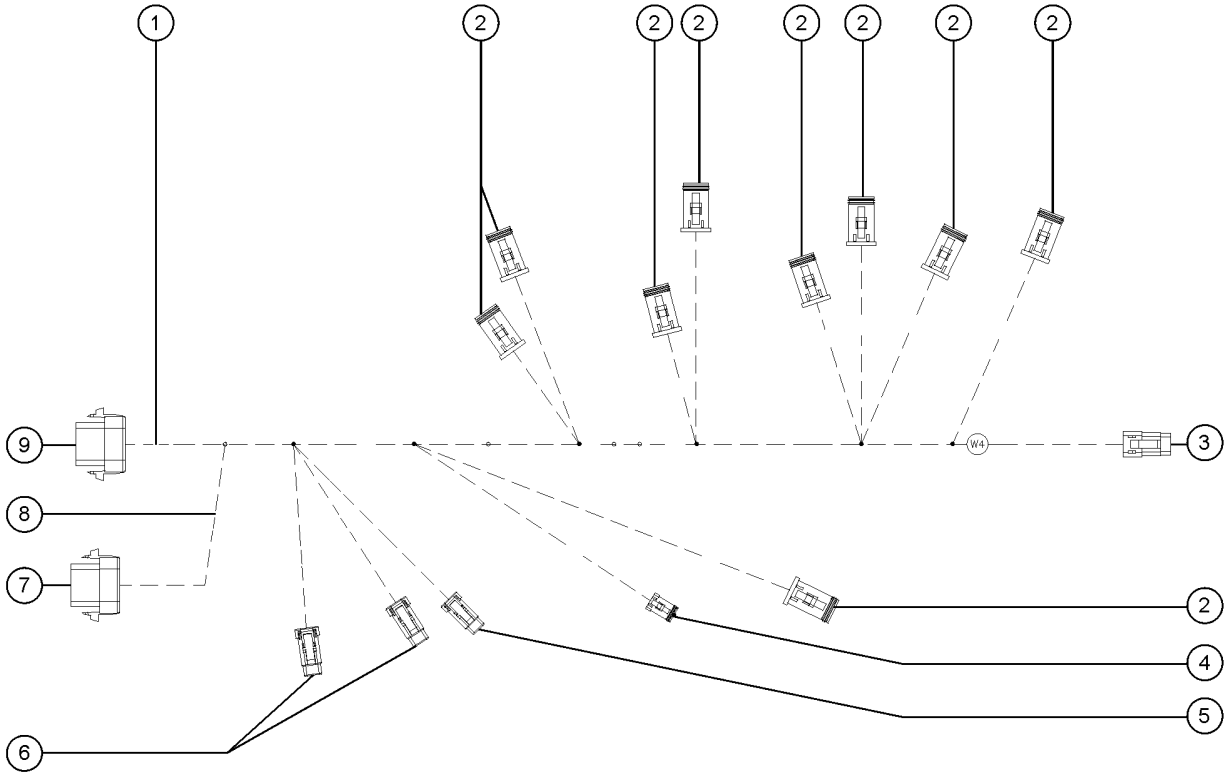

310.107 HARNESS, PLATFORM, MANIFOLD, ALC600, EPL

Item	Part No.	Description	Qty.
-	1306608GT	HARNESS, PLATFORM, MANIFOLD, ALC600, EPL	1
1	75640GT	WIRE LOOM,3/4 DIA.	23
2	119056GT	CONN, PLUG, 2 WAY, DEUTSCH, DT, ENDCAP	9
2-	60425GT	CONN, PLUG, 2 WAY, DEUTSCH, DT, LOCK	9
3	99343GT	CONNECTOR,PLUG 6 WAY 18-20 GA	1
3-	99344GT	LOCK,PLUG 6 WAY 18-20GA	1
4	119058GT	CONN, PLUG, 4 WAY, DEUTSCH, DT, ENDCAP	1
4-	60429GT	LOCK, PLUG 4WAY, 14-18GA	1
5	1277904GT	CONN, PLUG, 4 WAY, DEUTSCH, DTM	1
5-	1277905GT	CONN, PLUG, 4 WAY, DEUTSCH, DTM, LOCK	1
6	1253250GT	CONN, PLUG, 2 WAY, DEUTSCH, DTM	2
6-	1268161GT	CONN, PLUG, 2 WAY, DEUTSCH, DTM, LOCK	2
7	226947GT	CONN, PLUG, 18 WAY, DEUTSCH, DTV, BLACK	1
7-	226390GT	LOCK,PLUG, 18WAY, DSCH, WV-18S	1
8	20973GT	WIRE LOOM,3/8 POLY SLIT to SN S65XCH-51059	93 Inches
8B	20973GT	WIRE LOOM,3/8 POLY SLIT from SN 65XCH-51060	86 Inches
9	226389GT	CONN, PLUG, 18 WAY, DEUTSCH, DTV, GRAY	1
9-	226390GT	LOCK,PLUG, 18WAY, DSCH, WV-18S	1

310.108 ASSEMBLY,FOOTSWITCH

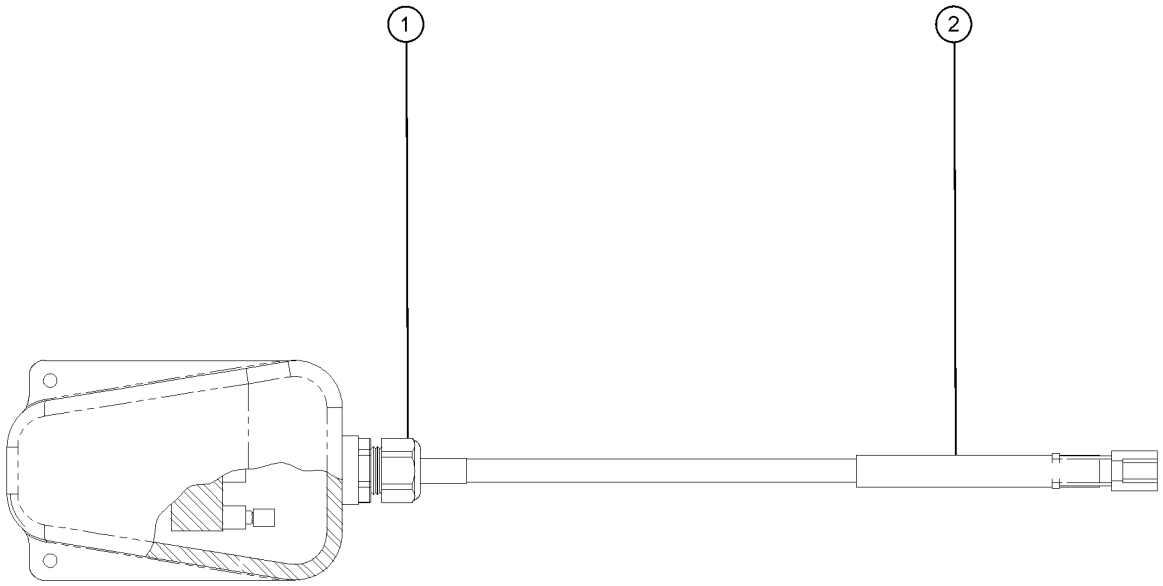

310.108 ASSEMBLY,FOOTSWITCH

Item	*Part No.*	*Description*	*Qty.*
-	227618GT	ASSEMBLY,FOOTSWITCH	1
-	227564GT	FOOT SWITCH,20A IP65	1
1	33576GT	CONN,SQZ,1/2NPT,.170-.450	1
2	119065GT	CONN, RECEP, 2 WAY, DEUTSCH, DT	1
2-	60439GT	CONN, RECEP, 2 WAY, DEUTSCH, DT, LOCK	1

310.109 HARNESS, LIGHTS, WORK

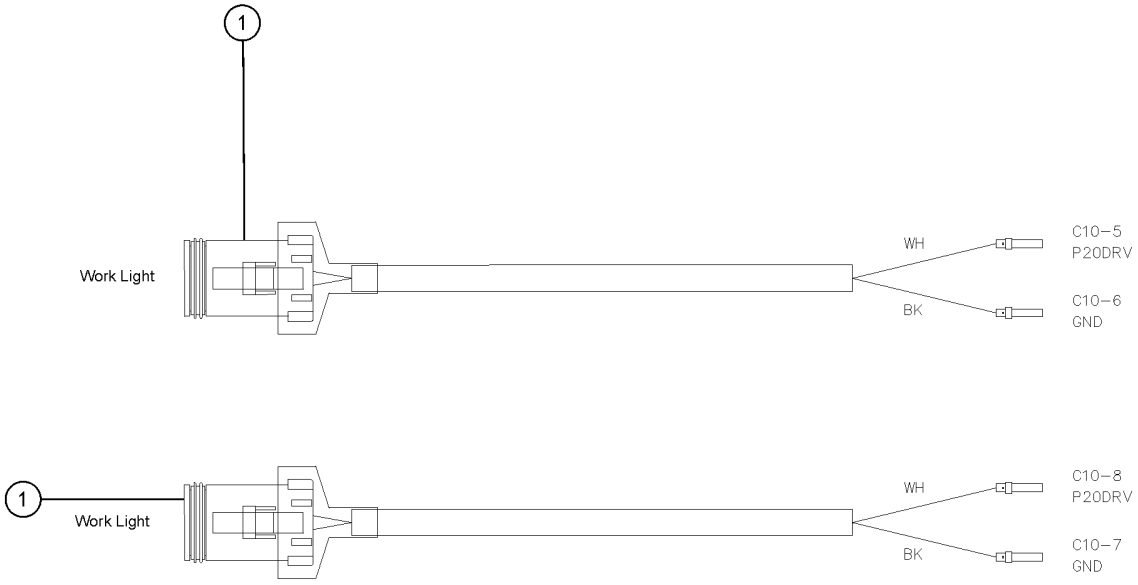

310.109 HARNESS, LIGHTS, WORK

Item	*Part No.*	*Description*	*Qty.*
-	1269720GT	HARNESS, LIGHTS, WORK	1
1	119056GT	CONN, PLUG, 2 WAY, DEUTSCH, DT, ENDCAP	2
1-	60425GT	CONN, PLUG, 2 WAY, DEUTSCH, DT, LOCK	2

310.109B ASSY,WORK LIGHT,LED 12V,45W

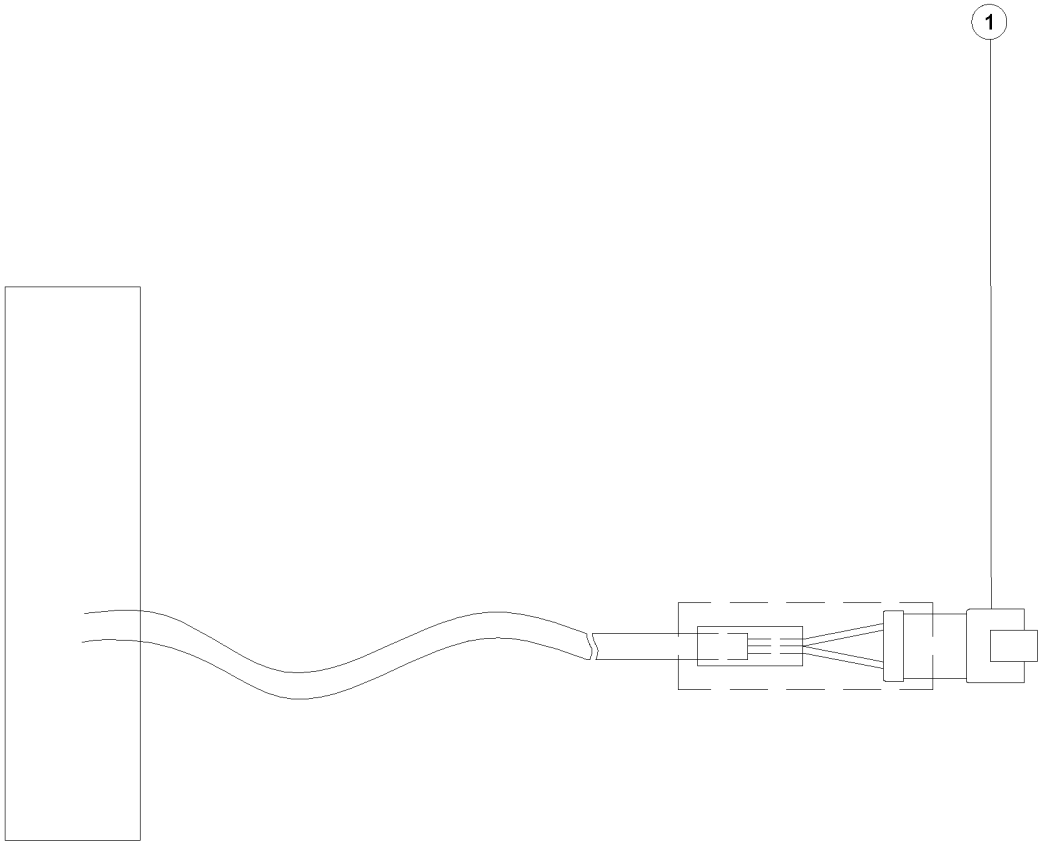

310.109B ASSY,WORK LIGHT,LED 12V,45W

Item	*Part No.*	*Description*	*Qty.*
-	1305837GT	ASSY,WORK LIGHT,LED 12V,45W	
1	119065GT	CONN, RECEP, 2 WAY, DEUTSCH, DT	1
1-	60439GT	CONN, RECEP, 2 WAY, DEUTSCH, DT, LOCK	1

310.110 ANGLE SENSOR,360DEG,CAN

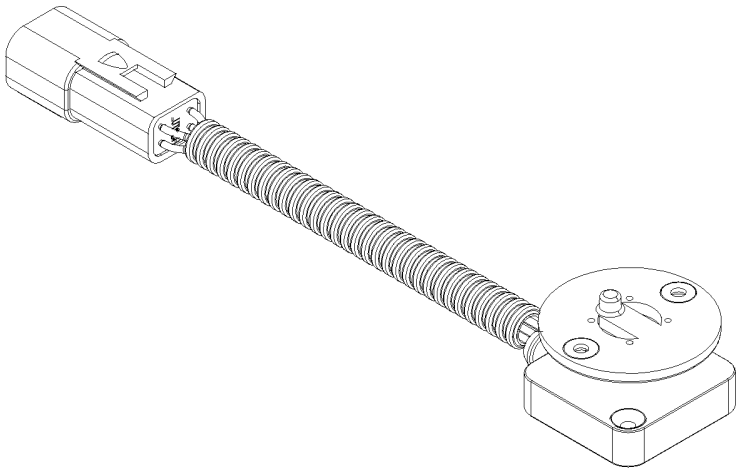

Item	*Part No.*	*Description*	*Qty.*
-	1275778GT	ANGLE SENSOR,360DEG,CAN(R/B 1276511GT)	

310.111 HARNESS, LST10, S60/65XC

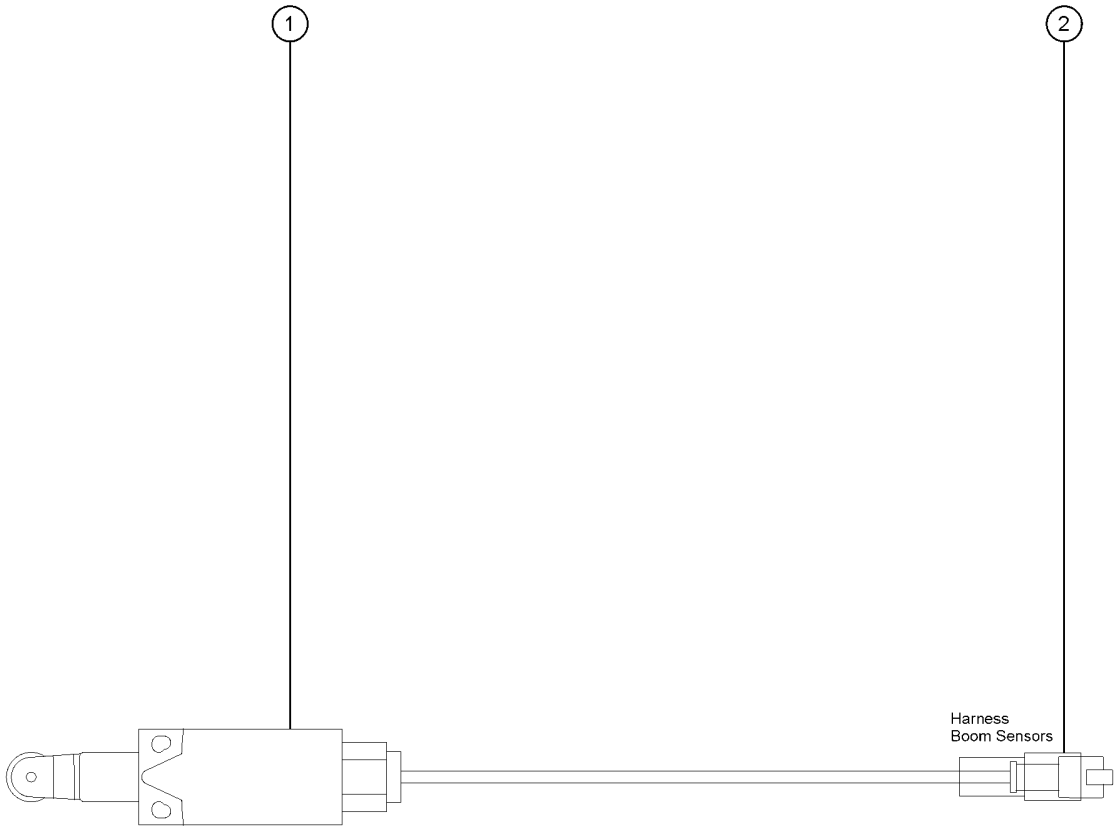

310.111 HARNESS, LST10, S60/65XC

Item	Part No.	Description	Qty.
-	1294573GT	HARNESS, LST10, S60/65XC	1
1	88356-13103GT	SWITCH,LIMIT,W/RLLR ARM,NO/NC	1
2	119065GT	CONN, RECEP, 2 WAY, DEUTSCH, DT	1
2-	60439GT	CONN, RECEP, 2 WAY, DEUTSCH, DT, LOCK	1

310.112 HARNESS, LST3S, S60/65XC

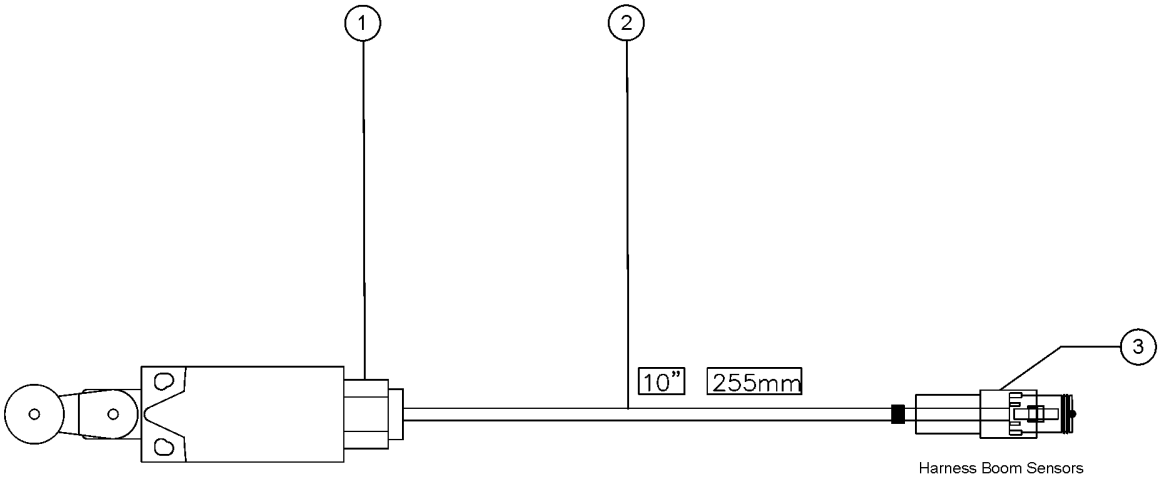

310.112 HARNESS, LST3S, S60/65XC

Item	*Part No.*	*Description*	*Qty.*
-	1311698GT	HARNESS, LST3S, S60/65XC	1
1	88356-11103GT	SWITCH,LIMIT,W/RLR ARM,NO/NC	1
2	73814GT	CONN,DSCH,BOOT,DT2S-BT	1
3	119056GT	CONN, PLUG, 2 WAY, DEUTSCH, DT, ENDCAP	1
3-	60425GT	CONN, PLUG, 2 WAY, DEUTSCH, DT, LOCK	1

310.113 HARNESS, LSB1RS, S80/85

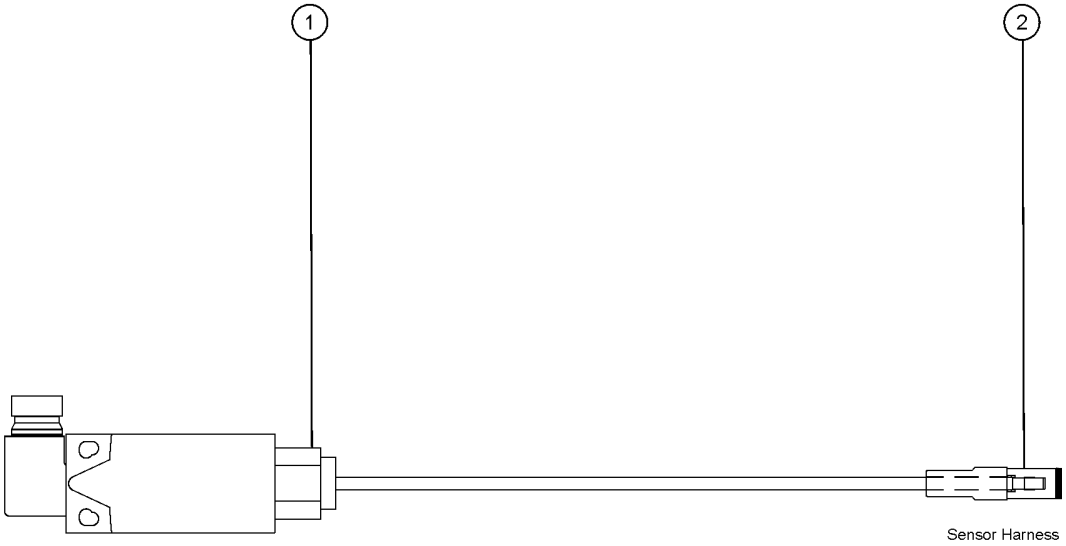

310.113 HARNESS, LSB1RS, S80/85

Item	*Part No.*	*Description*	*Qty.*
-	1269714GT	HARNESS, LSB1RS, S80/85	1
1	88356-32163GT	SWITCH,LIMIT,TABULATED,BLUE	1
2	119761GT	CONN PLUG 2 WAY EXTEND DT	1
2-	60425GT	CONN, PLUG, 2 WAY, DEUTSCH, DT, LOCK	1

310.114 HARNESS, LSB2S, S80/85

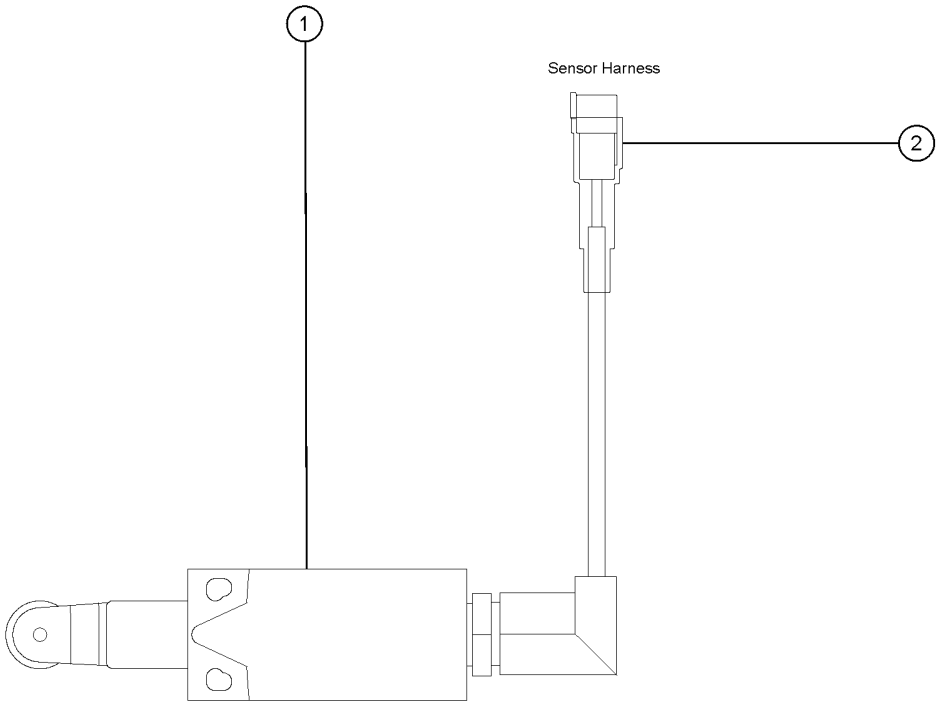

310.114 HARNESS, LSB2S, S80/85

Item	*Part No.*	*Description*	*Qty.*
-	1269717GT	HARNESS, LSB2S, S80/85	1
1	88356-13107GT	SWITCH,LIMIT,TABULATE,BLUE	1
2	119065GT	CONN, RECEP, 2 WAY, DEUTSCH, DT	1
2-	60439GT	CONN, RECEP, 2 WAY, DEUTSCH, DT, LOCK	1

310.115 HARNESS, LIGHTS, DRIVE

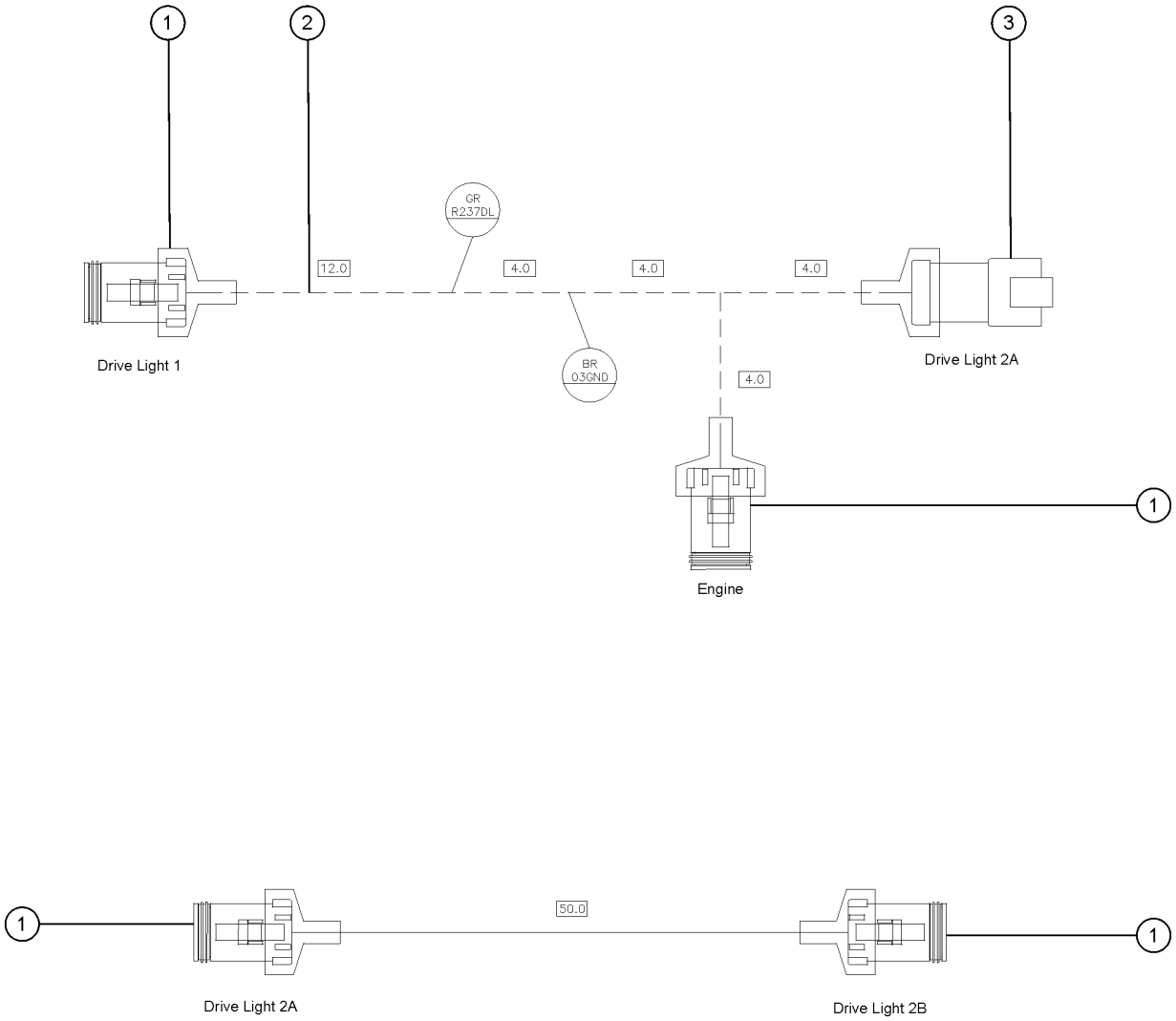

310.115 HARNESS, LIGHTS, DRIVE

Item	*Part No.*	*Description*	*Qty.*
-	1269724GT	HARNESS, LIGHTS, DRIVE	1
1	119056GT	CONN, PLUG, 2 WAY, DEUTSCH, DT, ENDCAP	4
1-	60425GT	CONN, PLUG, 2 WAY, DEUTSCH, DT, LOCK	4
2	20973GT	WIRE LOOM,3/8 POLY SLIT	25 Inches
3	119065GT	CONN, RECEP, 2 WAY, DEUTSCH, DT	1
3-	60439GT	CONN, RECEP, 2 WAY, DEUTSCH, DT, LOCK	1

310.115B ASSY,DRIVE LIGHT,12V LED

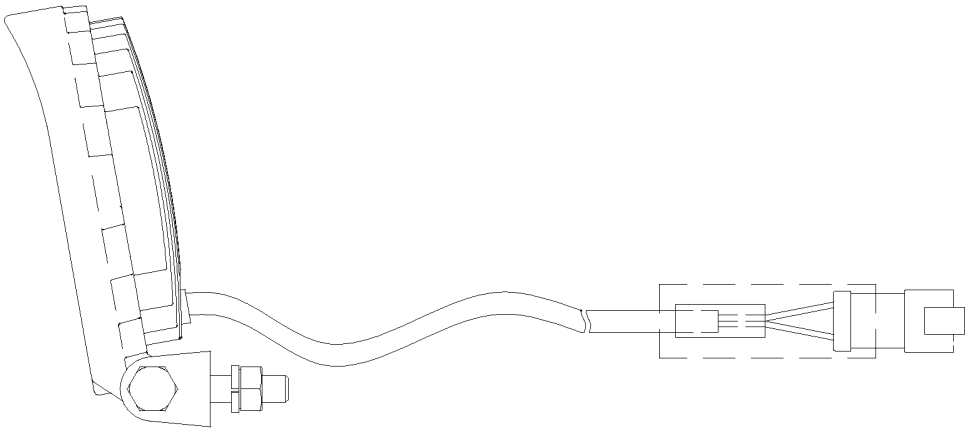

310.115B ASSY,DRIVE LIGHT,12V LED

Item	*Part No.*	*Description*	*Qty.*
-	1306812GT	ASSY,DRIVE LIGHT,12V LED	

310.116 HARNESS,BEACONS,FLASHING

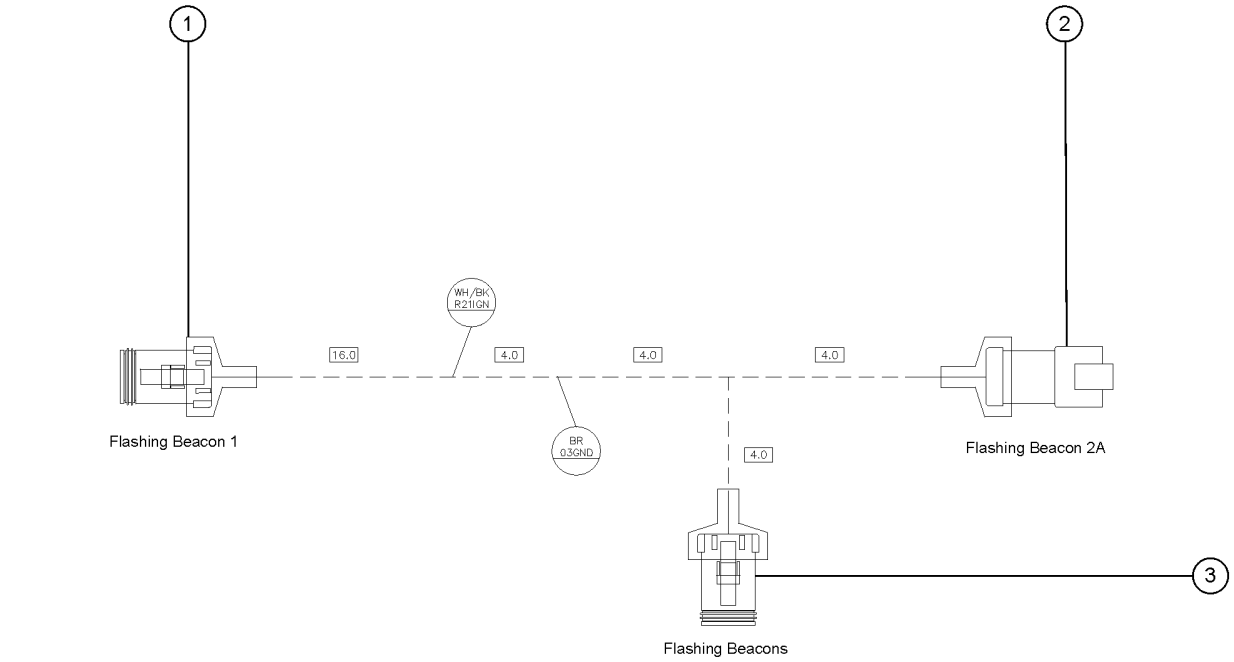



310.116 HARNESS,BEACONS,FLASHING

Item	Part No.	Description	Qty.
-	1269729GT	HARNESS, BEACONS, FLASHING	1
-	20973GT	WIRE LOOM,3/8 POLY SLIT	35
1	119056GT	CONN, PLUG, 2 WAY, DEUTSCH, DT, ENDCAP	3
1-	60425GT	CONN, PLUG, 2 WAY, DEUTSCH, DT, LOCK	3
2	119065GT	CONN, RECEP, 2 WAY, DEUTSCH, DT	3
2-	60439GT	CONN, RECEP, 2 WAY, DEUTSCH, DT, LOCK	1
3	119057GT	CONN, PLUG, 3 WAY, DEUTSCH, DT, ENDCAP	1
3-	60427GT	CONN, PLUG, 3 WAY, DEUTSCH, DT, LOCK	1

310.118 HARNESS, BOOM SENSORS,BOOM SD

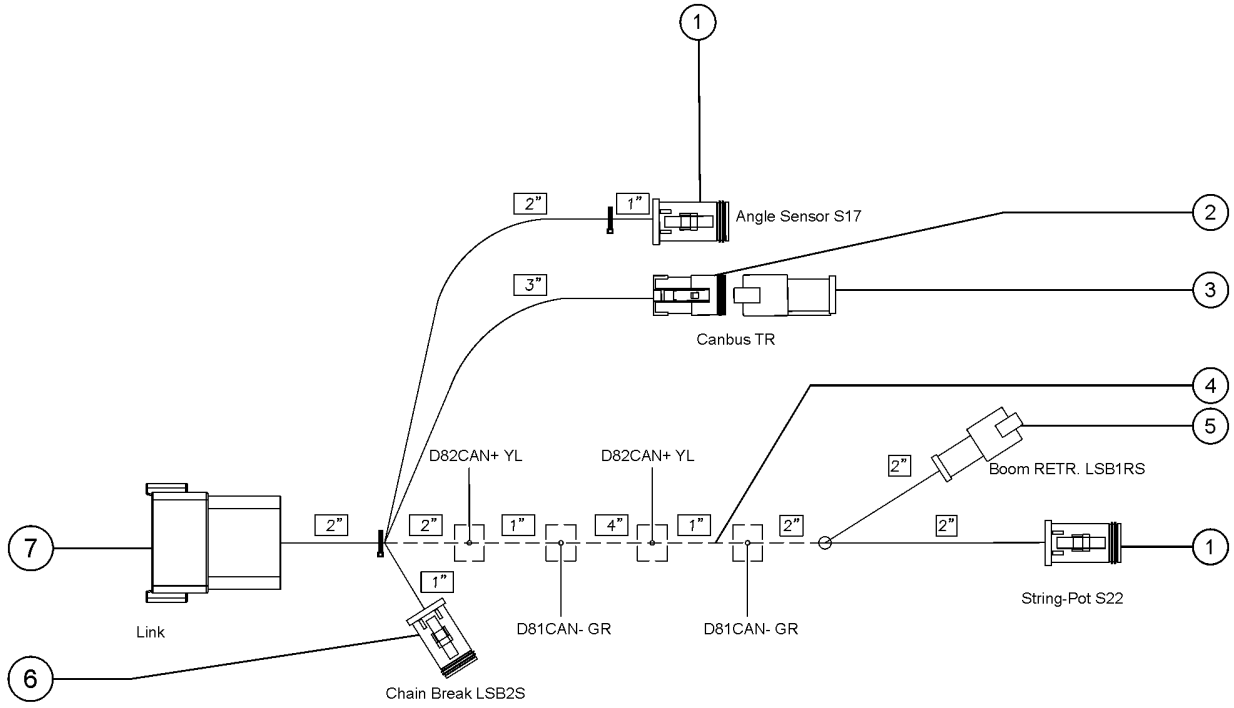

310.118 HARNESS, BOOM SENSORS,BOOM SD

Item	Part No.	Description	Qty.
-	1287631GT	HARNESS, BOOM SENSORS,BOOM SD	1
1	119058GT	CONN, PLUG, 4 WAY, DEUTSCH, DT, ENDCAP	2
1-	60429GT	LOCK, PLUG 4WAY, 14-18GA	2
2	119057GT	CONN, PLUG, 3 WAY, DEUTSCH, DT, ENDCAP	1
2-	60459GT	LOCK,PLUG 3 WAY,SAE J1939	1
3	60452GT	CONN, RECEP, 3 WAY, DEUTSCH, DT, J1939/120OHM	1
4	39908GT	WIRE LOOM,1/2 DIA.	12 Inches
5	119065GT	CONN, RECEP, 2 WAY, DEUTSCH, DT	1
5-	60439GT	CONN, RECEP, 2 WAY, DEUTSCH, DT, LOCK	1
6	119056GT	CONN, PLUG, 2 WAY, DEUTSCH, DT, ENDCAP	1
6-	60425GT	CONN, PLUG, 2 WAY, DEUTSCH, DT, LOCK	1
7	119070GT	CONN,RECEP 12 WAY ENDCAP DT	1
7-	54255GT	LOCK, RECEP 12WAY, 14-18GA	1

310.119 CABLE ASSY, BLACK 2/0

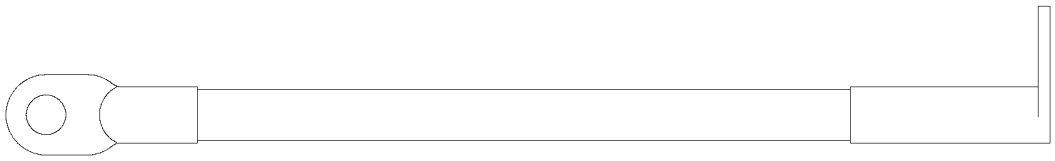

310.119 CABLE ASSY, BLACK 2/0

Item	*Part No.*	*Description*	*Qty.*
-	1269061GT	CABLE ASSY, BLACK 2/0	1

310.120 HARNESS, EXT CABLE, CAN SENSOR, 18/4C

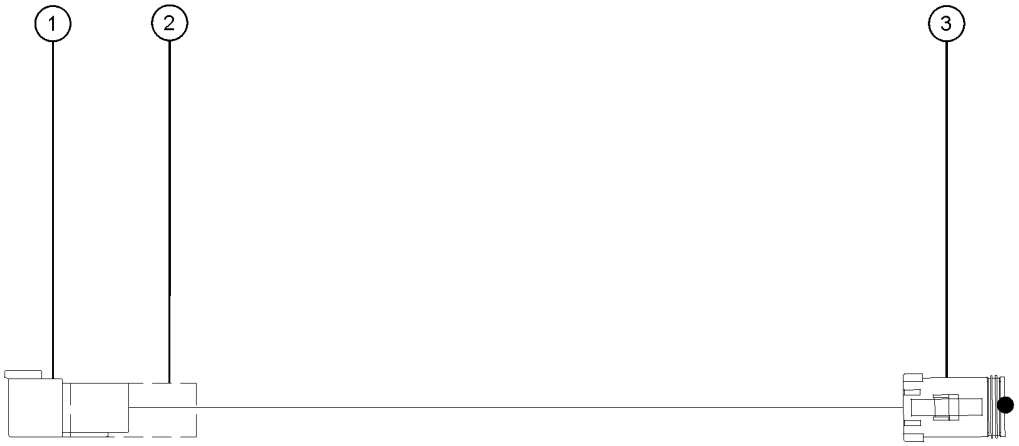

310.120 HARNESS, EXT CABLE, CAN SENSOR, 18/4C

Item	*Part No.*	*Description*	*Qty.*
-	1269738GT	MODULE, VEC, ALC600	
1	119067GT	CONN, RECEP, 4 WAY, DEUTSCH, DT, ENDCAP	1
1-	60443GT	LOCK, RECEP 4WAY, 14-18GA	1
2	73725GT	BOOT,DTSCH,DTP4-BT to SN S65XCH-51059	1
3	119058GT	CONN, PLUG, 4 WAY, DEUTSCH, DT, ENDCAP	1
3-	60429GT	LOCK, PLUG 4WAY, 14-18GA	1

310.121 LOAD CELL, J1939, 650KG/1433LB

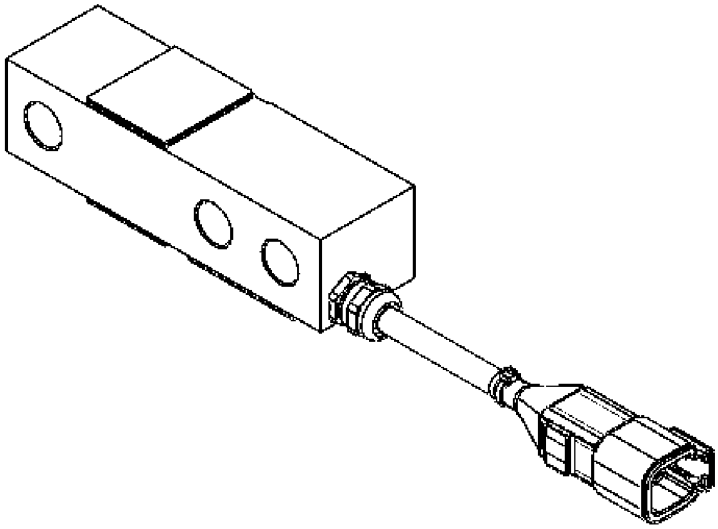

310.121 LOAD CELL, J1939, 650KG/1433LB

Item	*Part No.*	*Description*	*Qty.*
-	1270278GT	LOAD CELL,J1939,650KG/1433LB	

310.122 LENGTH TRANSDUCER, 400 IN, CAN ID 47

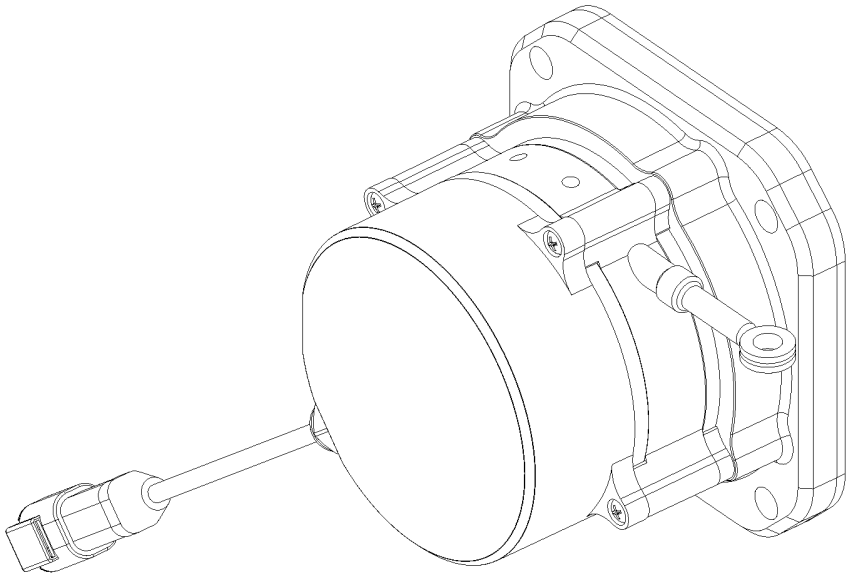

310.122 LENGTH TRANSDUCER, 400 IN, CAN ID 47

Item	Part No.	Description	Qty.
-	1278666GT	LENGTH TRANSDUCER, 400 IN, CAN ID 47 to SN S65XCH-50230	
-	1319559GT	LENGTH TRANSDUCER, 400 IN, CAN ID 47 from SN S65XCH-50231	

310.123 MODULE, VEC, ALC600

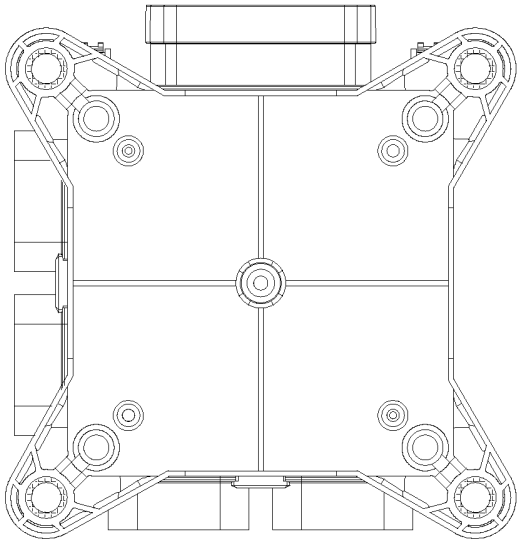

Item	Part No.	Description	Qty.
-	1269738GT	MODULE, VEC, ALC600	

310.124 SENSOR,LEVEL,UNIVERSAL

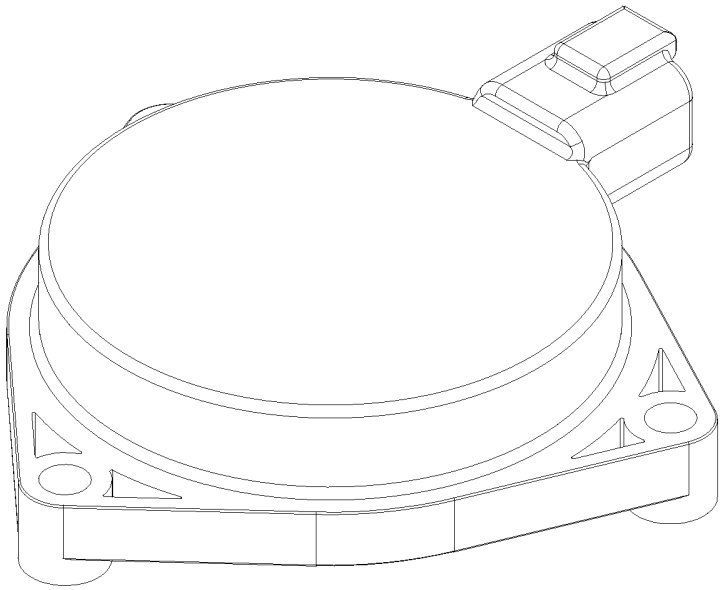

Item	*Part No.*	*Description*	*Qty.*
-	823368GT	SENSOR,LEVEL,UNIVERSAL	

310.125 CABLE ASSY, RED 2/0



310.125 CABLE ASSY, RED 2/0

Item	*Part No.*	*Description*	*Qty.*
-	1269051GT	CABLE ASSY, RED 2/0	1

310.126 HARNESS, PROX, MANIFOLD, PLAT

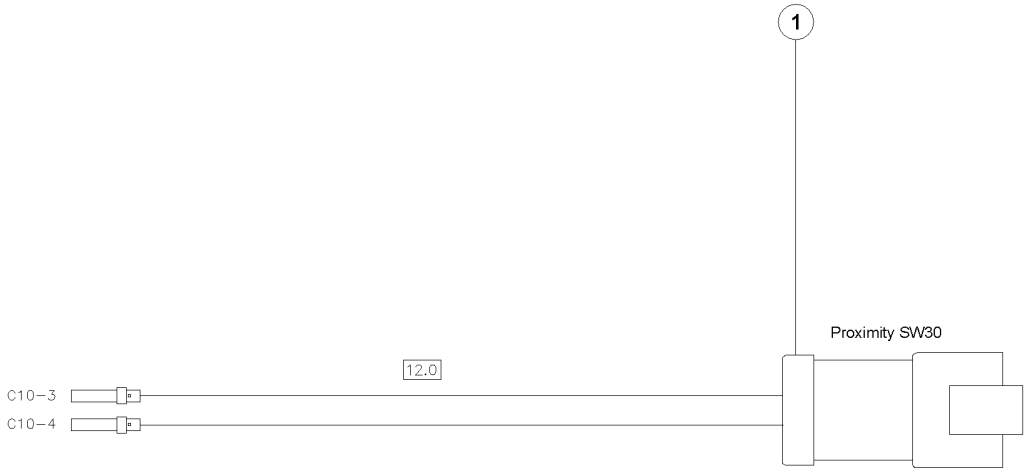

310.126 HARNESS, PROX, MANIFOLD, PLAT

Item	*Part No.*	*Description*	*Qty.*
-	1269734GT	HARNESS, PROX, MANIFOLD, PLAT	1
1	119065GT	CONN, RECEP, 2 WAY, DEUTSCH, DT	1
1-	60439GT	CONN, RECEP, 2 WAY, DEUTSCH, DT, LOCK	1

310.127 ASSEMBLY,SENSOR, PROX,CONTACT ALARM

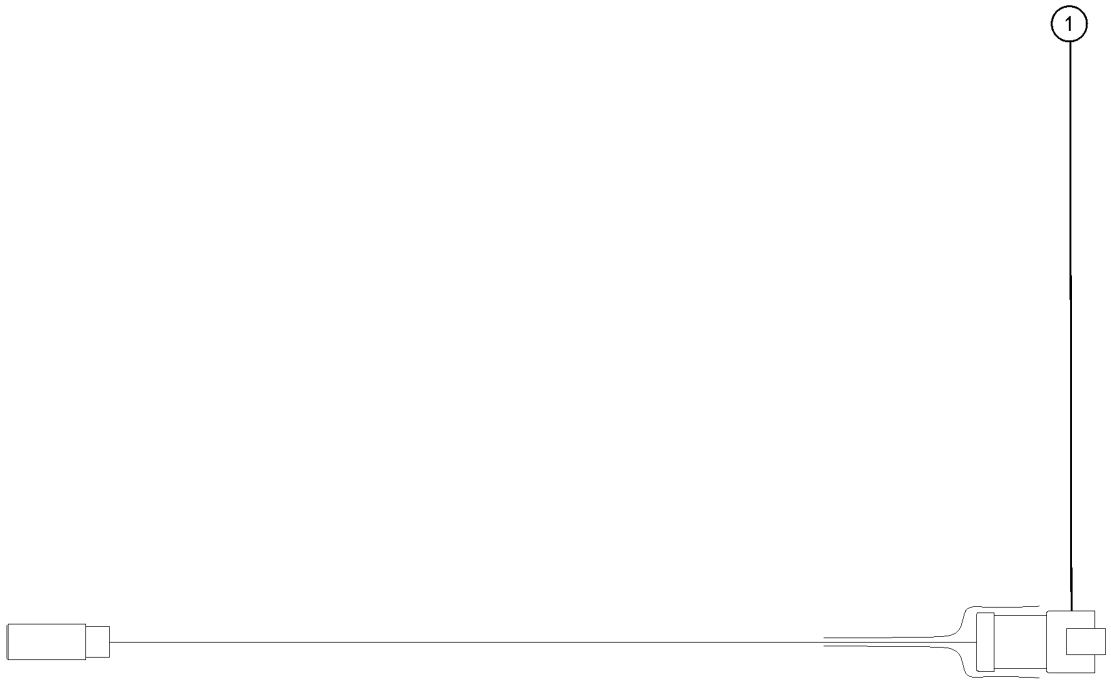

310.127 ASSEMBLY,SENSOR, PROX,CONTACT ALARM

Item	*Part No.*	*Description*	*Qty.*
-	1278119GT	ASSEMBLY, SENSOR, PROX, CONTACT ALARM	
1	1277906GT	CONN, RECEP, 4 WAY, DTM	1
1-	1277907GT	LOCK, RECEP, 4 WAY, DTM	1

310.128 ASSY, LIGHTS, 12/24 V CONTACT ALARM, AMBER

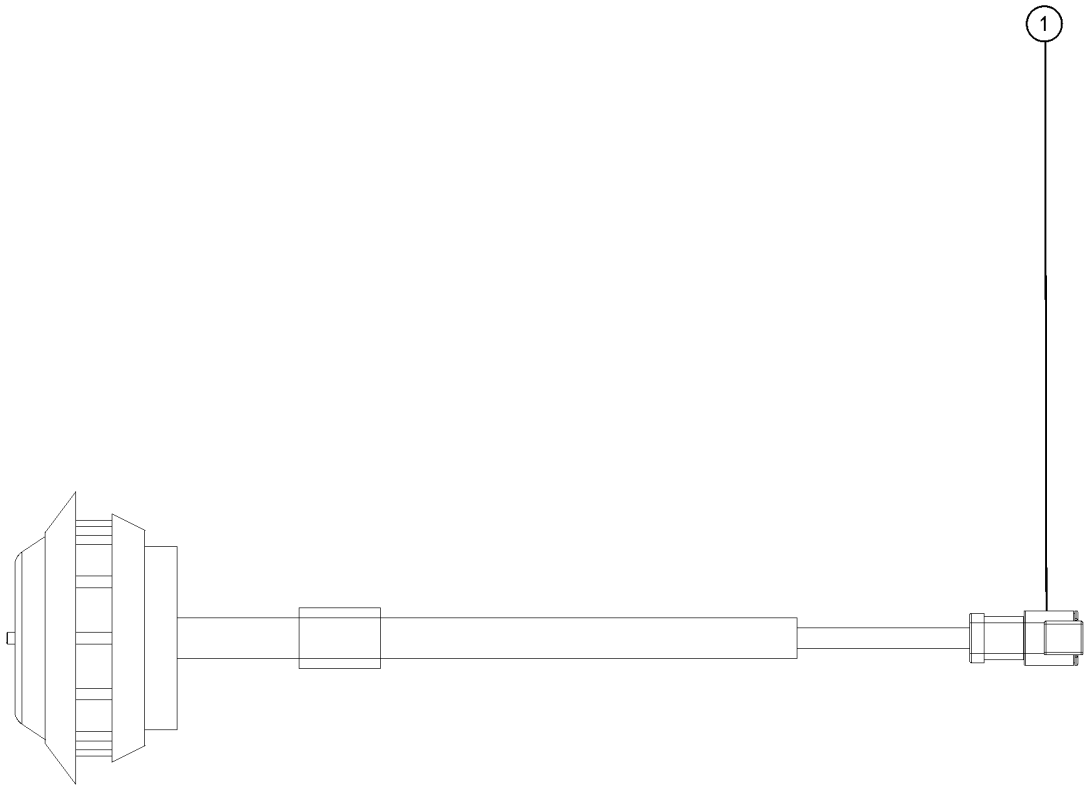

310.128 ASSY, LIGHTS, 12/24 V CONTACT ALARM, AMBER

Item	*Part No.*	*Description*	*Qty.*
-	1308384GT	ASSY, LIGHTS, 12/24 V CONTACT ALARM, AMBER	
1	1268166GT	CONN, RECEP, 2 WAY, DEUTSCH, DTM	1
1-	1253251GT	CONN, RECEP, 2 WAY, DEUTSCH, DTM, LOCK	1

310.129 BATTERY CABLE,POSITIVE,RED

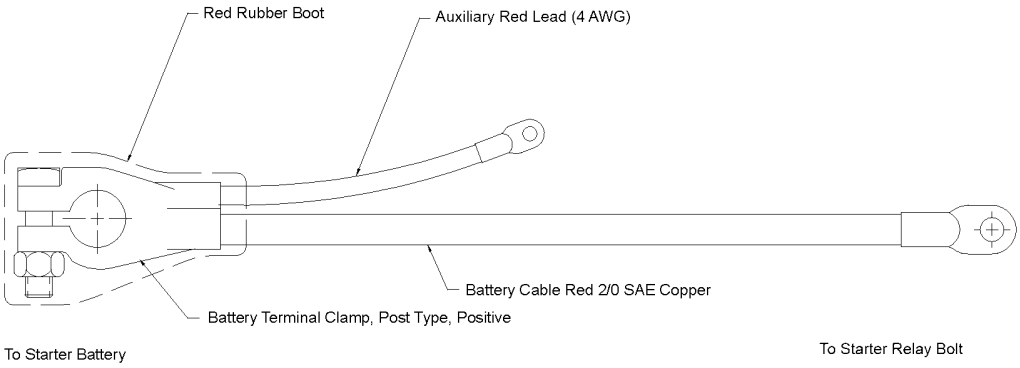

310.129 BATTERY CABLE,POSITIVE,RED

Item	*Part No.*	*Description*	*Qty.*
-	88801GT	BATTERY CABLE,POSITIVE,RED	1

310.130 CABLE, BATTERY, NEG, S60/65

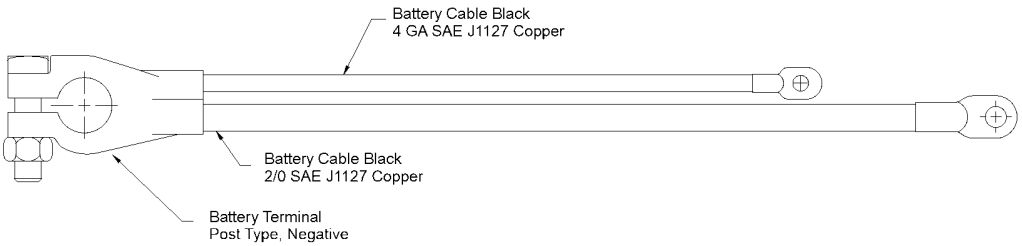

310.130 CABLE, BATTERY, NEG, S60/65

Item	*Part No.*	*Description*	*Qty.*
-	1291410GT	CABLE, BATTERY, NEG, S60/65	1

310.131 HARNESS,BATT2 TO APU(-),S80

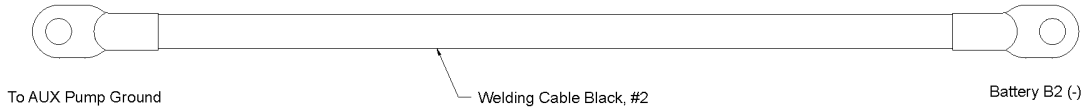

310.131 HARNESS,BATT2 TO APU(-),S80

Item	*Part No.*	*Description*	*Qty.*
-	121622GT	HARNESS,BATT2 TO APU(-),S80	1

310.132 HARNESS,BATT2 TO APU(+)

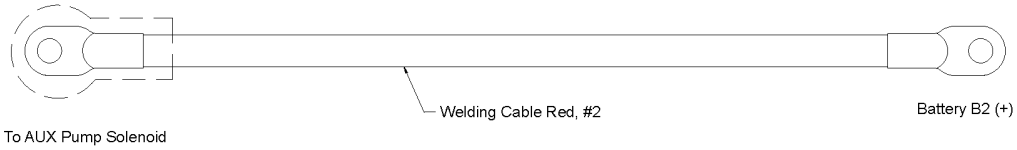

310.132 HARNESS,BATT2 TO APU(+)

Item	*Part No.*	*Description*	*Qty.*
-	121619GT	HARNESS,BATT2 TO APU(+),S80	1

310.134 HARNESS,AC POWER TO PLAT JIB



310.134 HARNESS,AC POWER TO PLAT JIB

Item	Part No.	Description	Qty.
-	139731GT	HARNESS,AC POWER TO PLAT JIB	1

310.136 CABLE, RED 2/0, 20"

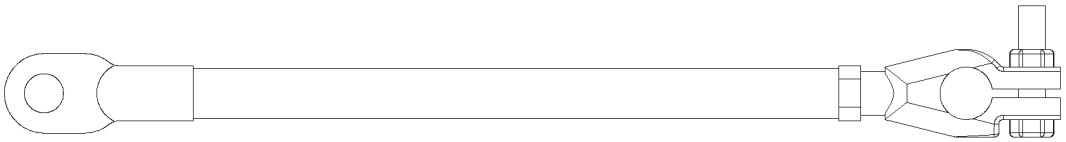

310.136 CABLE, RED 2/0, 20"

Item	*Part No.*	*Description*	*Qty.*
-	1269060GT	CABLE, RED 2/0, 20"	1
-	101681GT	BOOT,BATTERY CABLE TERM,LG RED	

310.137 HARNESS,OIL COOLER,LIFTPOWER

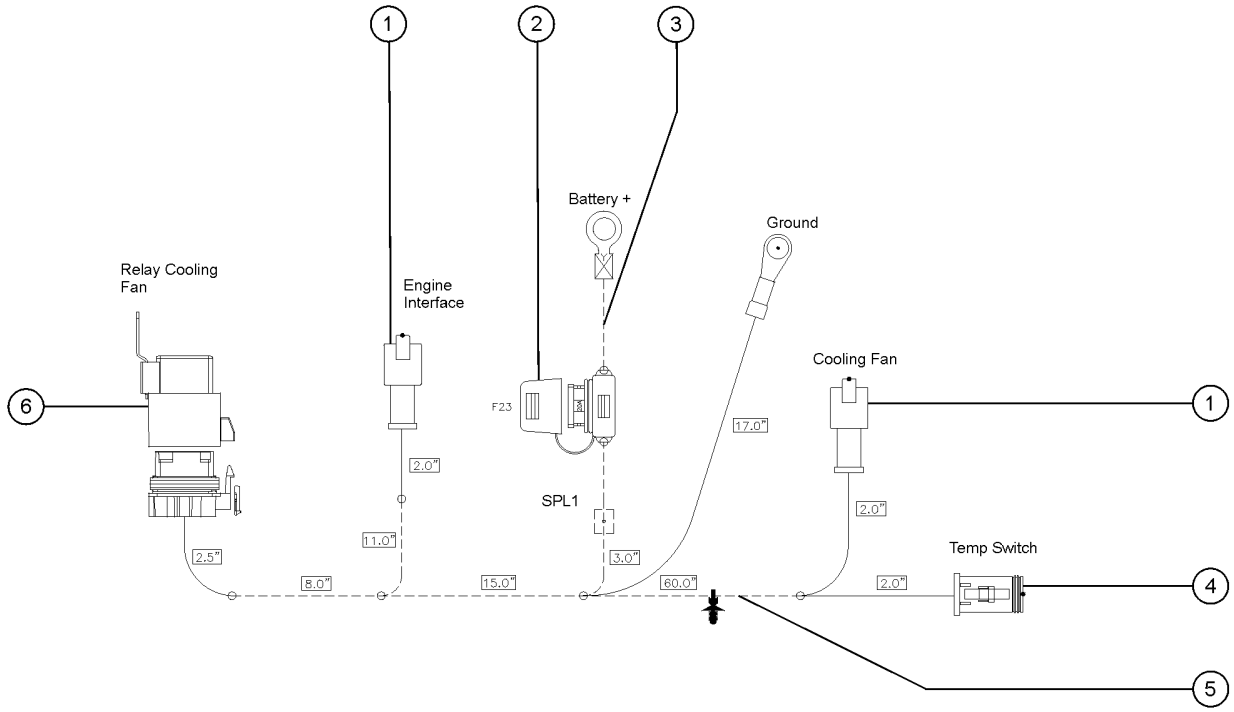

310.137 HARNESS,OIL COOLER,LIFTPOWER

Item	Part No.	Description	Qty.
-	1283555GT	HARNESS,OIL COOLER,LIFTPOWER	1
1	119065GT	CONN, RECEP, 2 WAY, DEUTSCH, DT	2
1-	60439GT	CONN, RECEP, 2 WAY, DEUTSCH, DT, LOCK	2
2	79015GT	FUSE,20 AMP,ATC	1
2-	67504GT	FUSE HOLDER,ATC 3-30 AMPS	1
3	99087GT	WIRE LOOM,1/4 DIA. SLIT	18 Inches
4	119056GT	CONN, PLUG, 2 WAY, DEUTSCH, DT, ENDCAP	1
4-	60425GT	CONN, PLUG, 2 WAY, DEUTSCH, DT, LOCK	1
5	20973GT	WIRE LOOM,3/8 POLY SLIT	83 Inches
6	60521GT	RELAY,SEALED 30/40 AMP	1
6-	1261815GT	SOCKET,SEALED RELAY,4WAY BLUE	1

310.138 HARNESS,GND BATT 1 TO BATT 2



310.138 HARNESS,GND BATT 1 TO BATT 2

Item	*Part No.*	*Description*	*Qty.*
-	106555GT	HARNESS,GND BATT 1 TO BATT 2	1

310.139 HARNESS, BOOM SENSORS,LINK

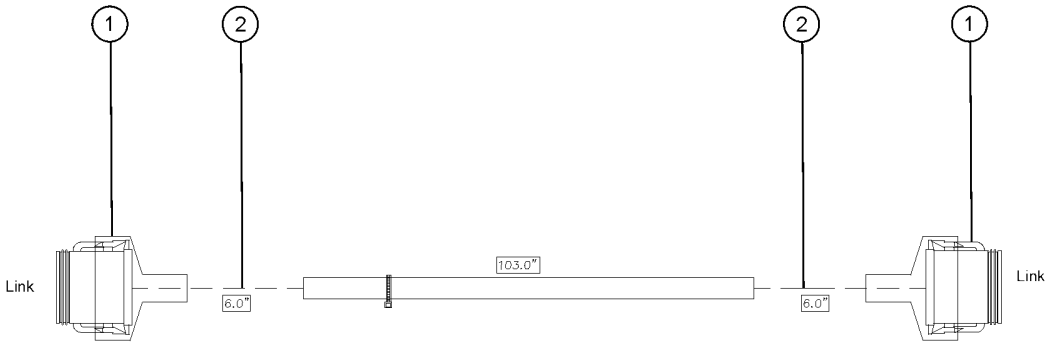

310.139 HARNESS, BOOM SENSORS,LINK

Item	*Part No.*	*Description*	*Qty.*
-	1287630GT	HARNESS, BOOM SENSORS,LINK	1
1	119061GT	CONN, PLUG, 12 WAY, DEUTSCH, DT, GRAY	2
1-	60435GT	LOCK, PLUG 12WAY, 14-18GA, GRN	2
1B	1284724GT	BOOT, RECEP, 12 WAY, DT, GY	2
2	75640GT	WIRE LOOM,3/4 DIA.	20 Inches

310.140 HARNESS,16 GA SEPERATOR TO GRD



310.140 HARNESS,16 GA SEPERATOR TO GRD

Item	Part No.	Description	Qty.
-	88831GT	HARNESS,16 GA SEPERATOR TO GRD	1

310.141 HARNESS,8GA BATT 2 TO SEPARATR



310.141 HARNESS,8GA BATT 2 TO SEPARATR

Item	Part No.	Description	Qty.
-	106554GT	HARNESS,8GA BATT 2 TO SEPARATR	1

310.142 HARNESS,APU+ TO BATT 2

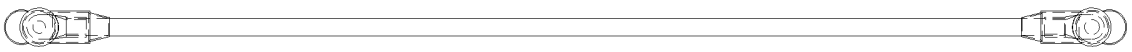

310.142 HARNESS,APU+ TO BATT 2

Item	*Part No.*	*Description*	*Qty.*
-	88804GT	HARNESS,APU+ TO BATT 2	1

310.143 HARNESS, PASS OPTION STG-V

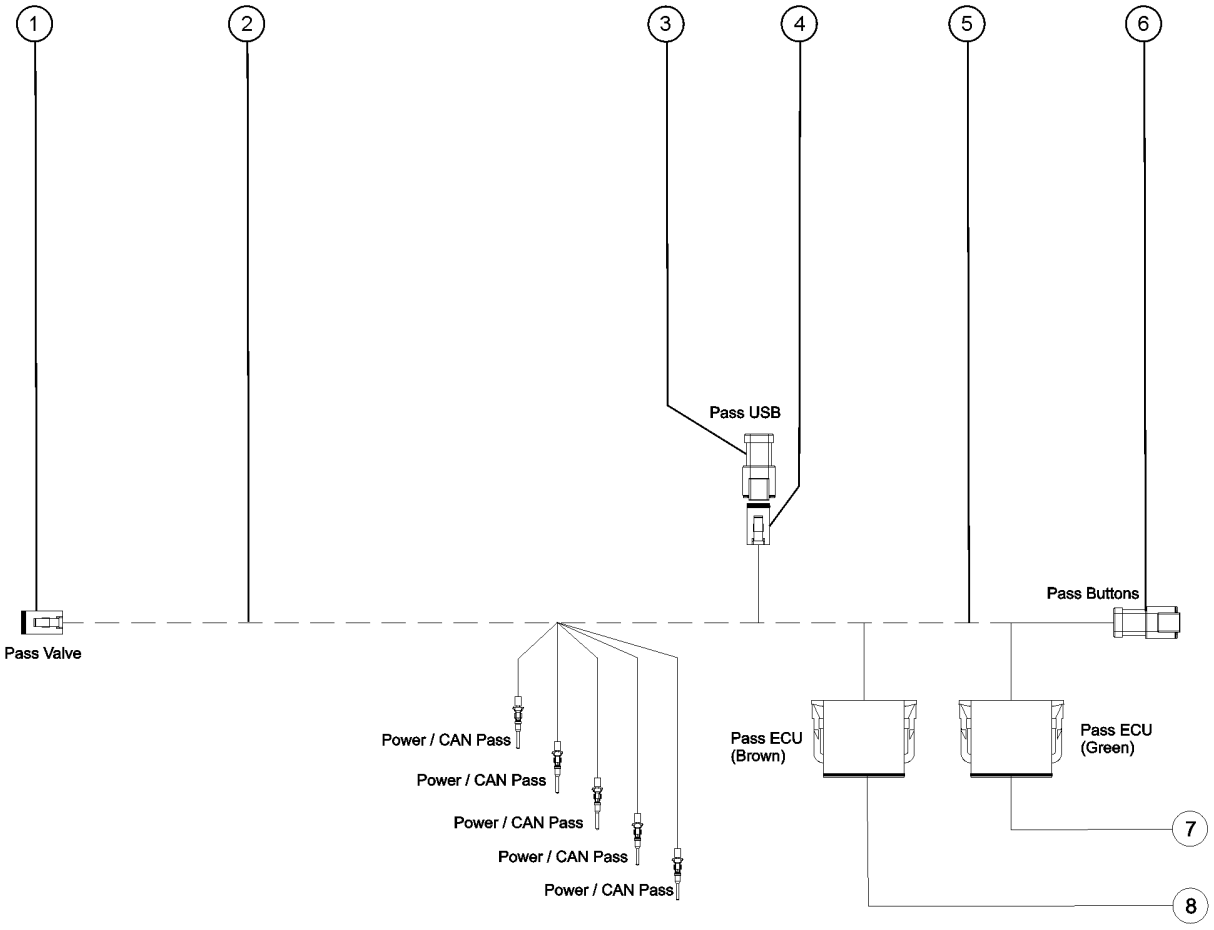

310.143 HARNESS, PASS OPTION STG-V

Item	Part No.	Description	Qty.
-	1311634GT	HARNESS PASS OPTION STG-V S65XC-Z62	
1	60428GT	CONN, PLUG 4WAY, 14-18GA	1
1-	60429GT	LOCK, PLUG 4WAY, 14-18GA	1
2	20973GT	WIRE LOOM,3/8 POLY SLIT	180
3	T112536GT	CONN, RECEP 3 WAY DTM, 16-24 GA	1
4	T110954GT	CONN,PLUG 3 WAY DTM, 16-24GA	1
4-	T110955GT	LOCK,PLUG 3 WAY DTM, 16-24GA	1
5	94652GT	WIRE LOOM,1/2DIA.SLIT HI-TEMP*	19.5
6	T112536GT	CONN, RECEP 3 WAY DTM, 16-24 GA	1
6-	T112537GT	LOCK,RECEP 3 WAY DTM,16-24GA	1
7	822250GT	CONN,PLUG 12C WAY DTM 18-20GA	1
7-	88332GT	LOCK,PLUG 12 WAY DTM 18-20GA	1
8	1258100GT	CONN,PLUG 12D WAY DTM 18-20GA	1
8-	88332GT	LOCK,PLUG 12 WAY DTM 18-20GA	1

310.144 ASSY,WORK LIGHT,LED 12V,45W

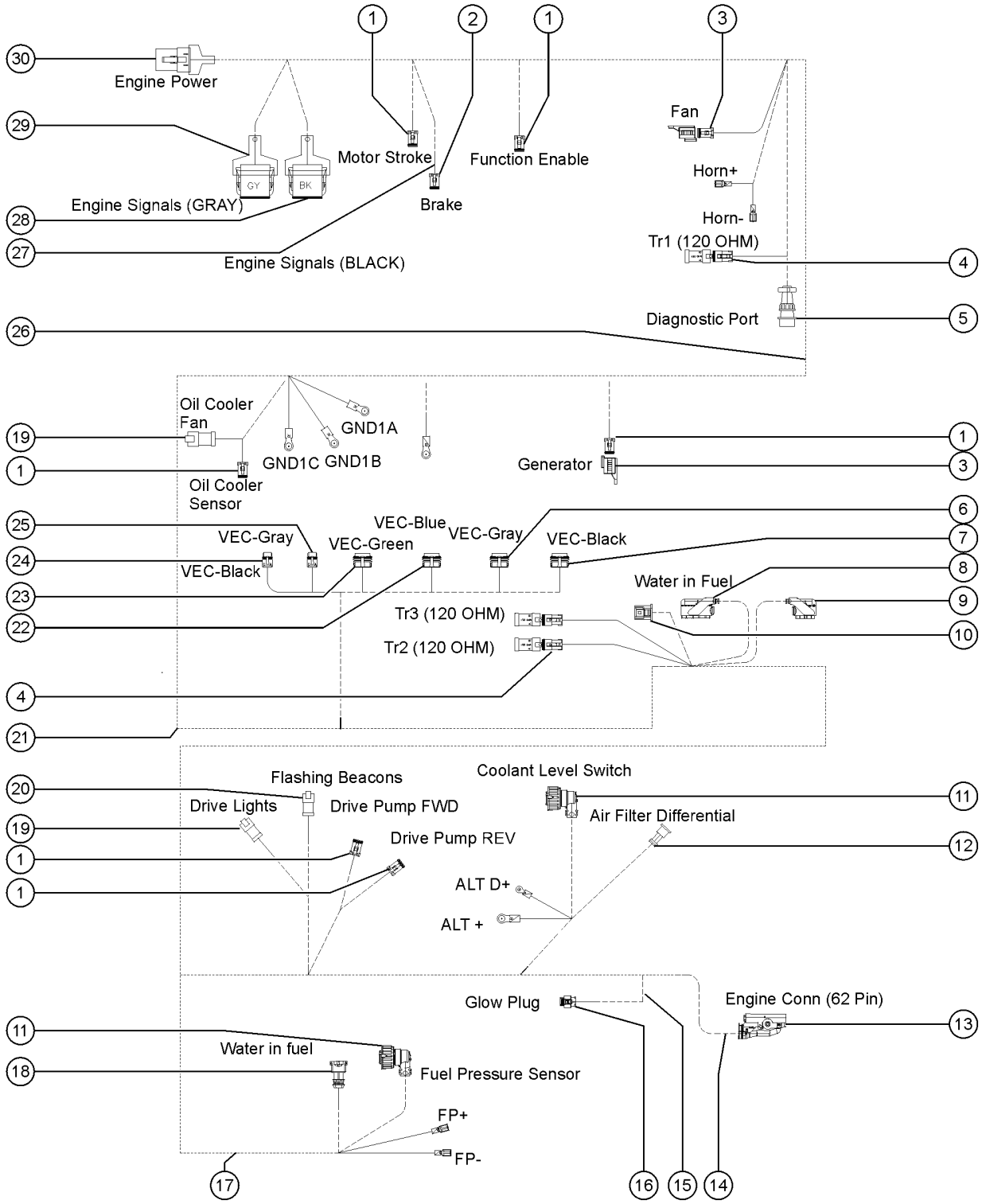

310.144 ASSY,WORK LIGHT,LED 12V,45W

Item	Part No.	Description	Qty.
1	119056GT	CONN, PLUG, 2 WAY, DEUTSCH, DT, ENDCAP	8
2	60425GT	CONN, PLUG, 2 WAY, DEUTSCH, DT, LOCK	8
3	229110GT	CONN, RECEP, 2 WAY, DEUTSCH, DT, CAP	2
4	119057GT	CONN, PLUG, 3 WAY, DEUTSCH, DT, ENDCAP	3
4-	60452GT	CONN, RECEP, 3 WAY, DEUTSCH, DT, J1939/120OHM	3
4-	60459GT	LOCK,PLUG 3 WAY,SAE J1939	3
5	822448GT	CONN,REC,CANN TR 12WAY,SIZE14	1
6	822465GT	CONN,8WAY CBT MALE,GRAY	1
6-	822466GT	LOCK,8WAY CBT TP2 SEALED	4
7	822464GT	CONN,8WAY CBT MALE,BLACK	1
7-	822466GT	LOCK,8WAY CBT TP2 SEALED	4
8	822439GT	CONN KIT,94POS,AMP MQS1.5/MCP2.8	1
9	822438GT	CONN KIT,RECEP 60POS,AMP MQS 1.5	1
10	1312877GT	LOCK, PLUG,FURUKAWA, RFW, 16-18GA	1
10-	1312876GT	CONN, PLUG, FURUKAWA, RFW, 16-18GA	1
11	822445GT	CONN,CIRC. AMP 4WAY,BLACK	2
12	56687GT	CONN, RECEP, 2 WAY, AMP, JR-PWR	1
13	822436GT	CONN,RECEP 62POS,AMP MCP1.5K/2.8	1
13-	822437GT	COVER,AMP 39/62POS CONNECTORS	1
14	101191GT	WIRE LOOM,1"DIA.SLIT,HI TEMP	1
15	20973GT	WIRE LOOM,3/8 POLY SLIT	1
16	822442GT	CONN,REC 2 WAY,AMP 8MM NGI, BLACK	1
17	94652GT	WIRE LOOM,1/2DIA.SLIT HI-TEMP*	1
18	822440GT	CONN,RECEP 2 WAY,AMP JR PT	1
18-	1312876GT	CONN, PLUG, FURUKAWA, RFW, 16-18GA	1
19	119065GT	CONN, RECEP, 2 WAY, DEUTSCH, DT	2
19-	60439GT	CONN, RECEP, 2 WAY, DEUTSCH, DT, LOCK	2
20	119066GT	CONN, RECEP, 3 WAY, DEUTSCH, DT, ENDCAP	1

310.144 ASSY,WORK LIGHT,LED 12V,45W

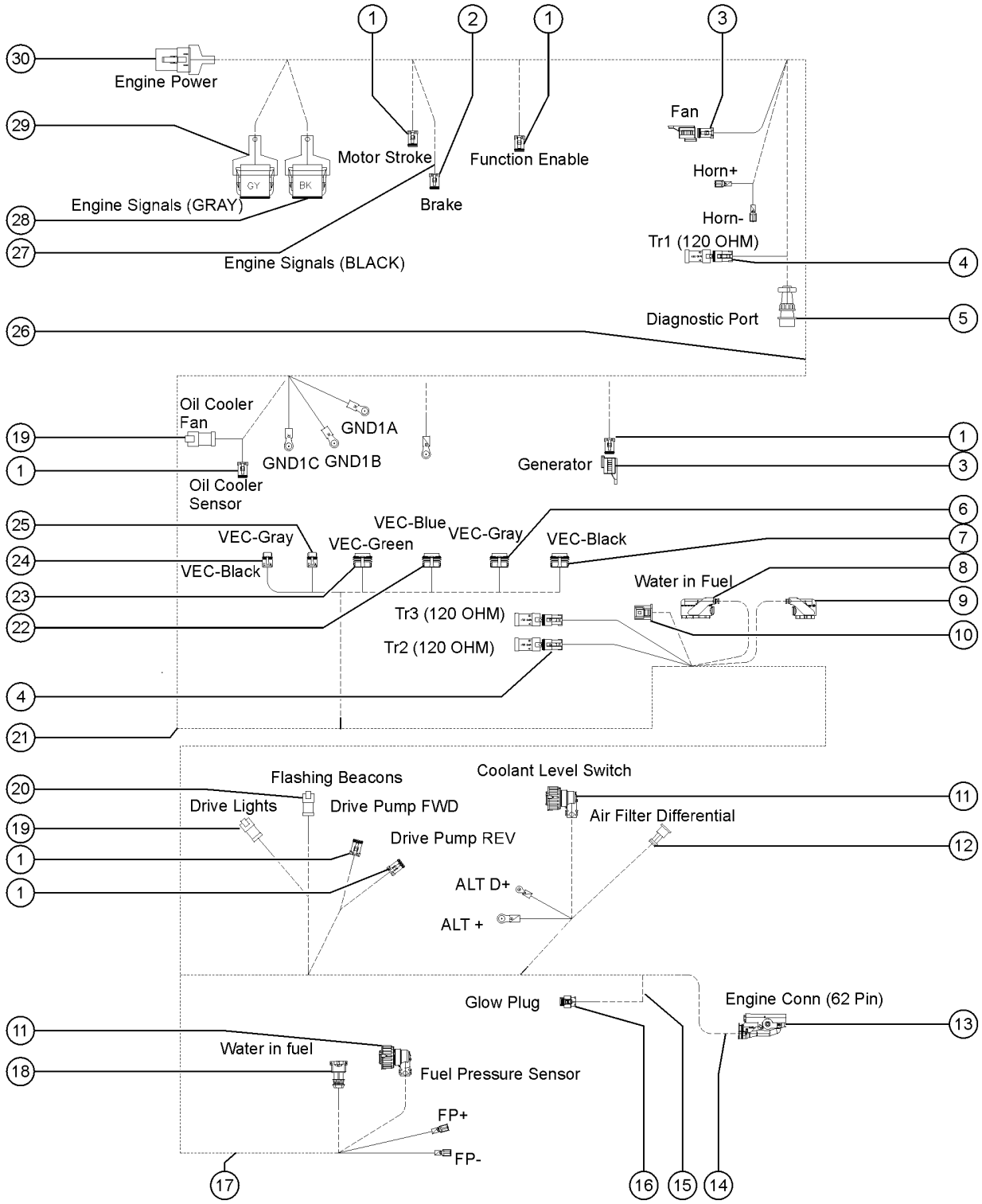

310.144 ASSY,WORK LIGHT,LED 12V,45W

Item	Part No.	Description	Qty.
20-	60441GT	CONN, RECEP, 3 WAY, DEUTSCH, DT, LOCK	1
21	150103GT	WIRE LOOM,1.25"NYLON,HIGH TEMP	1
22	822462GT	CONN, PLUG, 8 WAY, EATON, METRI-PACK 150, BLUE	1
22-	822466GT	LOCK,8WAY CBT TP2 SEALED	4
23	822463GT	CONN,8WAY CBT MALE,GREEN	1
23-	822466GT	LOCK,8WAY CBT TP2 SEALED	4
24	822467GT	CONN,2WAY CBT MALE,BLACK	1
24-	822469GT	LOCK,2WAY CBT TP2 SEALED	2
25	822468GT	CONN,2WAY CBT MALE,GRAY	1
25-	822469GT	LOCK,2WAY CBT TP2 SEALED	1
26	75640GT	WIRE LOOM,3/4 DIA.	1
27	99087GT	WIRE LOOM,1/4 DIA. SLIT	1
28	119062GT	CONN, PLUG, 12 WAY, DEUTSCH, DT, BLACK	1
28-	60435GT	LOCK, PLUG 12WAY, 14-18GA, GRN	2
29	119061GT	CONN, PLUG, 12 WAY, DEUTSCH, DT, GRAY	1
29-	60435GT	LOCK, PLUG 12WAY, 14-18GA, GRN	1
30	60527GT	CONN, PLUG, 4 WAY, DEUTSCH, DTP	1
30-	60528GT	LOCK,PLUG 4 WAY,12-14GA***	1

401.1 Function Manifold

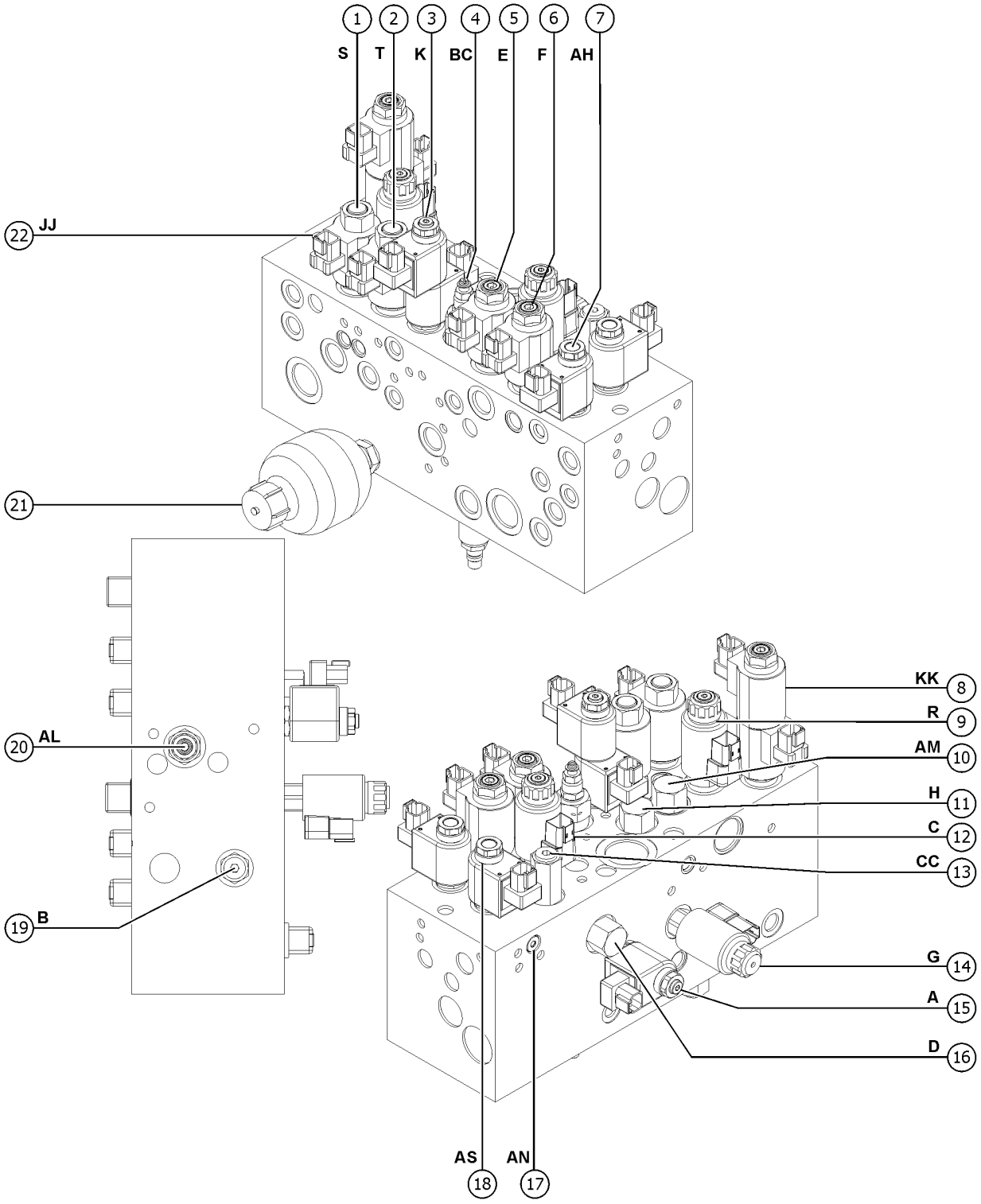

Item	Part No.	Description	Qty.
A-	1305586GT	MANIFOLD, FUNCTION, S60/65XC; E.58 H15 (complete)	1
B-		HARNESS, FUNCTION MANIFOLD, EPL (refer to 310.1)	1
1	231034GT	SOLENOID VALVE,3-WAY,2-POS S, Boom up	1
1-	237234GT	SEAL KIT,VALVE	
1-	111778GT	COIL,10V DC(D10,26 WATT)	
1-	119116GT	NUT,COIL (107745)	
2	231034GT	SOLENOID VALVE,3-WAY,2-POS T, Boom down	1
2-	237234GT	SEAL KIT,VALVE	
2-	111778GT	COIL,10V DC(D10,26 WATT)	
2-	119116GT	NUT,COIL (107745)	
3	122645GT	SOLENOID VALVE,SPOOL TYPE K, Turntable rotate	1
3-	122120GT	SEAL KIT, SOLENOID VALVE	
3-	89733GT	COIL SOLENOID VALVE***	
3-	102940GT	NUT,SOLENOID VALVE	
4	1288381GT	VALVE, RELIEVING BC, Oscillate pressure control	1
4-	1286190GT	SEAL KIT,PR VALVE	
5	122649GT	VALVE,SOLENOID,NO,POPPET E, Boom retract	1
5-	1274870GT	SEAL KIT, VALVE	
5-	111778GT	COIL,10V DC(D10,26 WATT)	
5-	119116GT	NUT,COIL (107745)	
6	122649GT	VALVE,SOLENOID,NO,POPPET F, Boom Extend	1
6-	1274870GT	SEAL KIT, VALVE	
6-	111778GT	COIL,10V DC(D10,26 WATT)	
6-	119116GT	NUT,COIL (107745)	
7	1288377GT	SOLENOID VALVE,3-WAY,2-POS (AH, Two-speed motor shift), (replaced by 1290553GT)	1
7-	1296802GT	SEAL KIT, SOLENOID VALVE	
7B	1290553GT	VALVE, SOLENOID, 2POS 3WAY	1
8	122647GT	SOLENOID VALVE SPOOL TYPE KK, Steering directional	1

401.1 Function Manifold

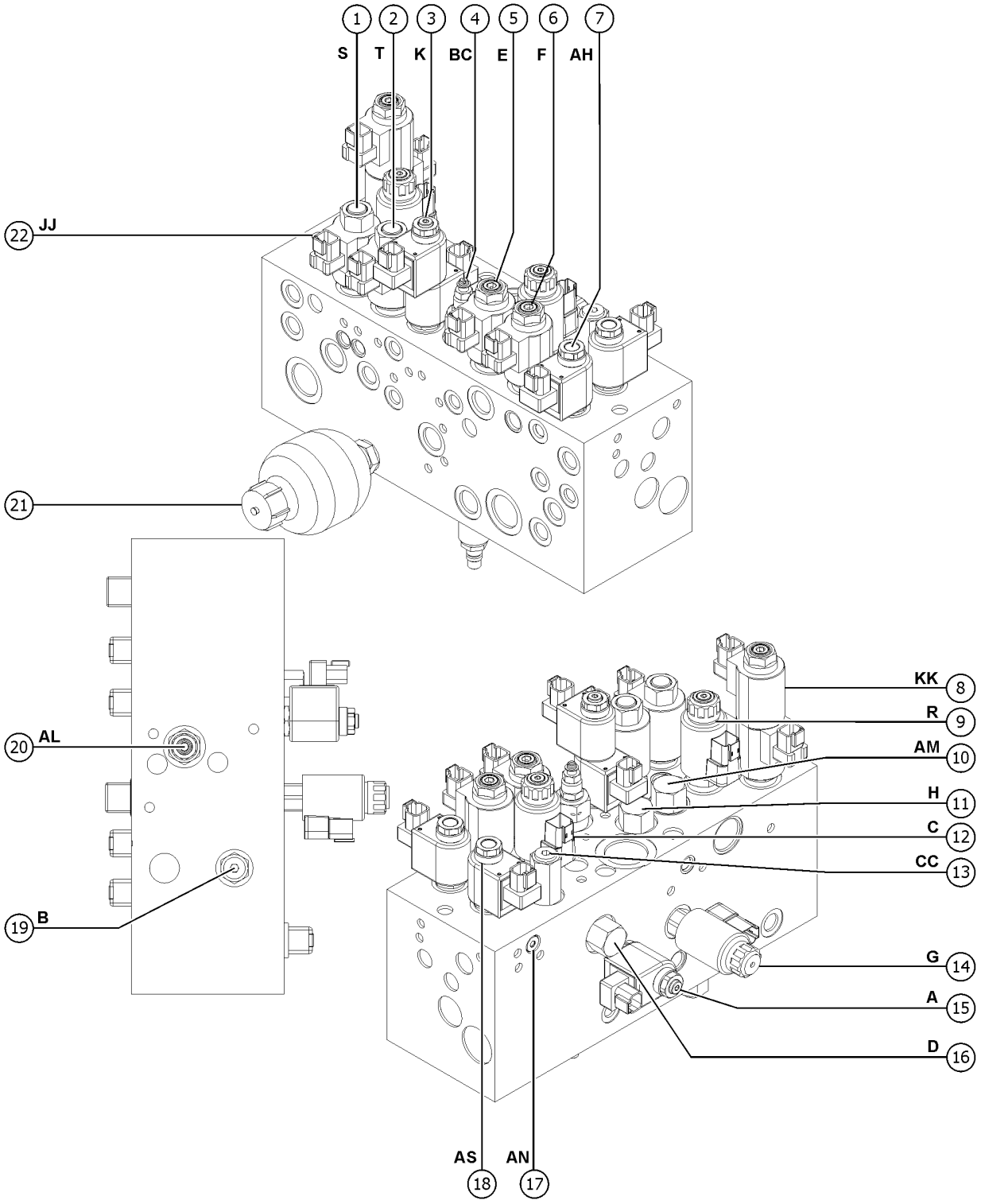

Item	Part No.	Description	Qty.
8-	122657GT	SEAL KIT	
8-	111778GT	COIL,10V DC(D10,26 WATT)	
8-	119115GT	NUT, COIL (107746)	
9	1288383GT	VALVE,PROPORTIONAL*** R, Boom up/down proportional	1
9-	89737GT	COIL, PROPORTIONAL VALVE***	
9-	1296803GT	SEAL KIT, PROPORTIONAL VALVE	
10	27802GT	VALVE,DIFFERENTIAL SENSING*** AM, Primary lift	1
10-	110197GT	SEAL KIT, VALVE, #10	
11	94599GT	VALVE,DIFFERENTIAL SENSING,110 H, Turntable rotate	1
11-	110197GT	SEAL KIT, VALVE, #10	
12	1288379GT	PROPORTIONAL VALVE C, Boom extend proportional	1
12-	89737GT	COIL, PROPORTIONAL VALVE***	
12-	1296803GT	SEAL KIT, PROPORTIONAL VALVE	
13	33998GT	VALVE,RELIEF*** CC, Boom extend relief	
13-	74902GT	SEAL KIT, VALVE	
14	102528GT	VALVE,PROPORTIONAL G, Turntable proportional	1
14-	89312GT	SEAL KIT, SOLENOID VALVE	
14-	89737GT	COIL, PROPORTIONAL VALVE***	
15	161533GT	VALVE, SOLENOID, 2 POS 2 WAY A, Differental sensing, turntable rotate	1
15-	89733GT	COIL SOLENOID VALVE***	
15-	89770GT	SEAL KIT, SOLENOID VALVE	
16	1288380GT	VALVE,DIFFERENTIAL SENSING D, Boom extend	1
16-	1296804GT	SEAL KIT, VALVE	
17	27807GT	VALVE,CHECK*** AN, Brake release circuit	
18	1288377GT	SOLENOID VALVE,3-WAY,2-POS AS, Brake release, (replaced by 1290553GT)	1
18-	1296802GT	SEAL KIT, SOLENOID VALVE	
18B	1290553GT	VALVE, SOLENOID, 2POS 3WAY	1
19	52715GT	VALVE,RELIEF 3200 PSI B, System relief	1

401.1 Function Manifold

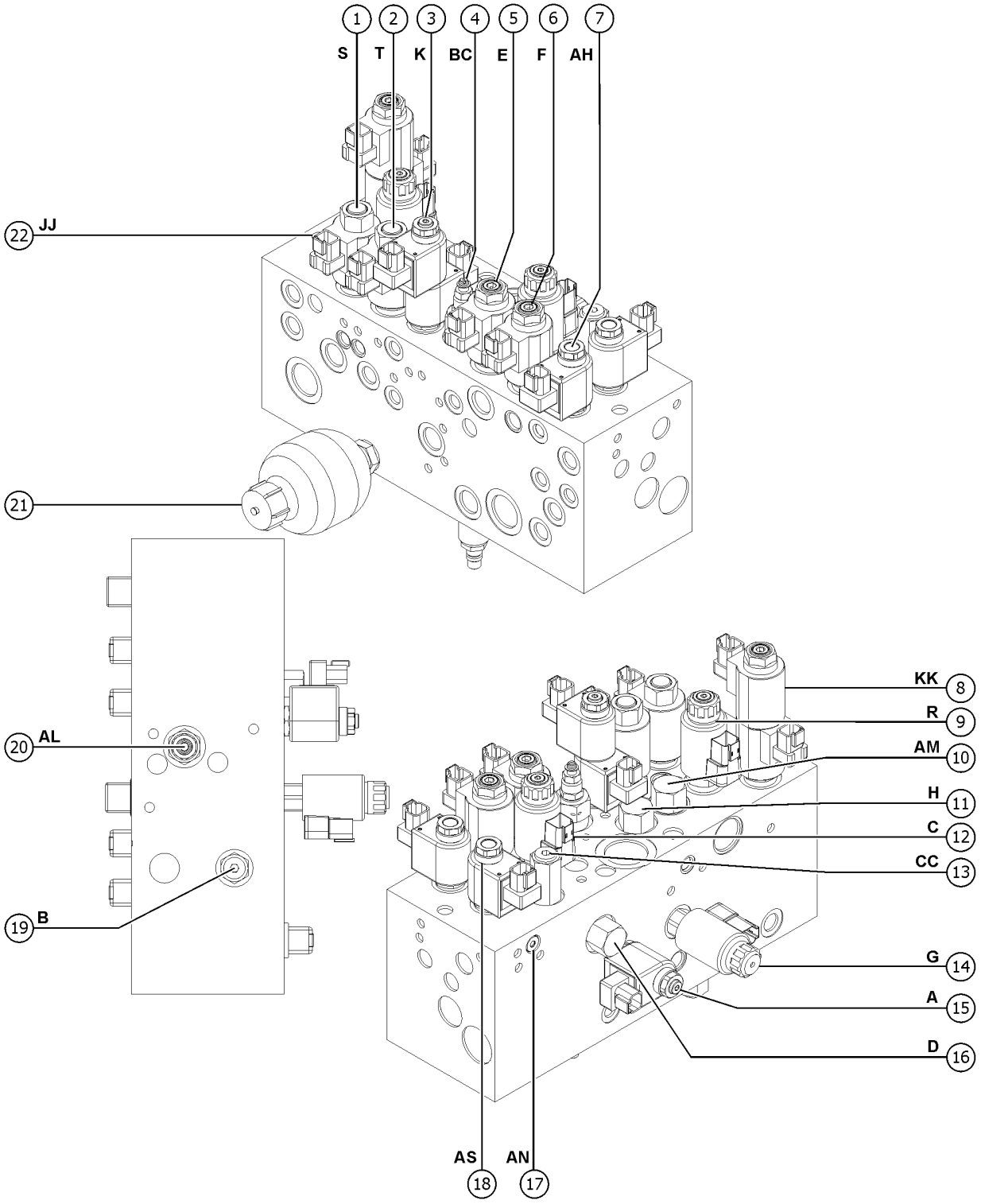

401.1 Function Manifold

Item	Part No.	Description	Qty.
19-	74902GT	SEAL KIT, VALVE	
20	1288382GT	VALVE, PILOT OPERATED AL, Oscillate control circuit	1
20-	110196GT	SEAL KIT, VALVE, #10	
21	1312118GT	ACCUMULATOR, 30CU. IN., 725 PSI	1
22	122641GT	VALVE,FLOW REGULATOR JJ, Steering flow control	1
22-	74902GT	SEAL KIT, VALVE	

402.1 Traction Manifold

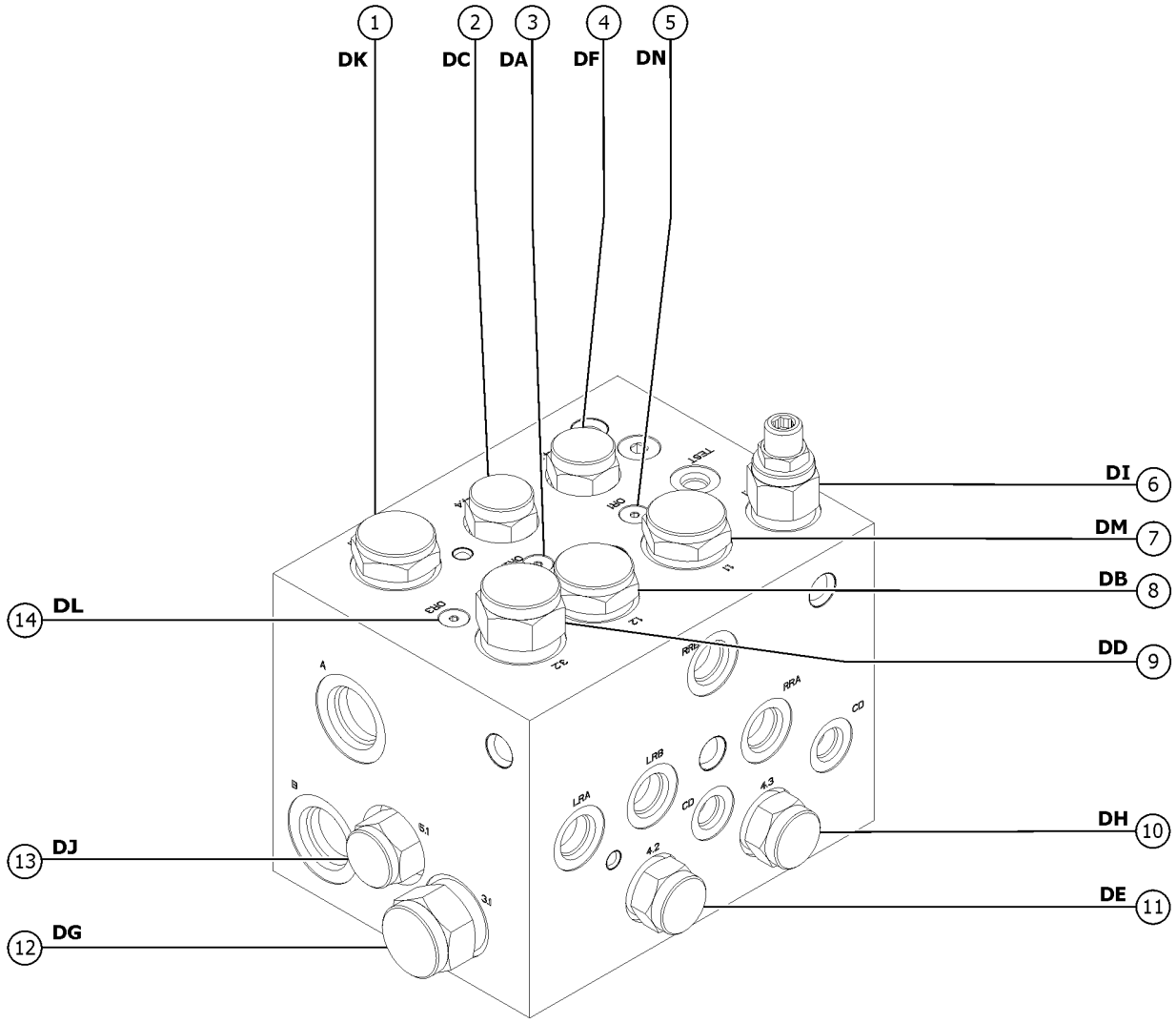

Item	Part No.	Description	Qty.
A	1276750GT	MANIFOLD, TRACTION, 4WD	
A-	1314493GT	PLUG, ORIFICE, .040 ID (1276750)	
B	28750GT	O-RING KIT,FIELD SVC,ALL PROD*	
C	49612GT	O-RING KIT (ORFS FITTINGS)	
D	33994GT	PLUG AND CAP KIT-SERVICE,37?**	
E	49613GT	PLUG AND CAP KIT-SERVICE,ORFS*	
1	139508GT	VALVE, FLOW DIVIDE/COMBINE 1:1 DK, Divides flow between diagonal pairs of motors: LF+RR=50%, LR+RF=50%	
1-	139512GT	SEAL KIT, VALVE	
2	139527GT	VALVE, CHECK, 5PSI DC, Prevents cavitation in LF motor	
2-	139515GT	SEAL KIT, VALVE	
3	139719GT	ORIFICE, 0.040" DA, Prevents scrub at high steer angles by allowing some bypass flow around the left flow divider	
4	139527GT	VALVE, CHECK, 5PSI DF, Prevent cavitation in RF motor	
4-	139515GT	SEAL KIT, VALVE	
5	139719GT	ORIFICE, 0.040" DN, Prevents scrub at high steer angles by allowing some bypass flow around the right flow divider	
6	139718GT	VALVE, RELIEF, 280PSI DI, Hot oil shuttle relief	
6-	139528GT	SEAL KIT, VALVE	
7	139717GT	VALVE, FLOW DIVIDE/COMB,24GPM DM, Combines return flow from RF and RR motors	
7-	139512GT	SEAL KIT, VALVE	
8	139717GT	VALVE, FLOW DIVIDE/COMB,24GPM DB, Combines return flow from LF and LR motors	
8-	139512GT	SEAL KIT, VALVE	
9	139716GT	VALVE, CHECK DD, Prevent cavitation in LF and RR motors	
9-	139727GT	SEAL KIT, VALVE	
10	139527GT	VALVE, CHECK, 5PSI DH, Prevent cavitation in RR motor	
10-	139515GT	SEAL KIT, VALVE	
11	139527GT	VALVE, CHECK, 5PSI DE, Prevent cavitation in LR motor	
11-	139515GT	SEAL KIT, VALVE	
12	139716GT	VALVE, CHECK DG, Prevent cavitation in RF and LR motors	

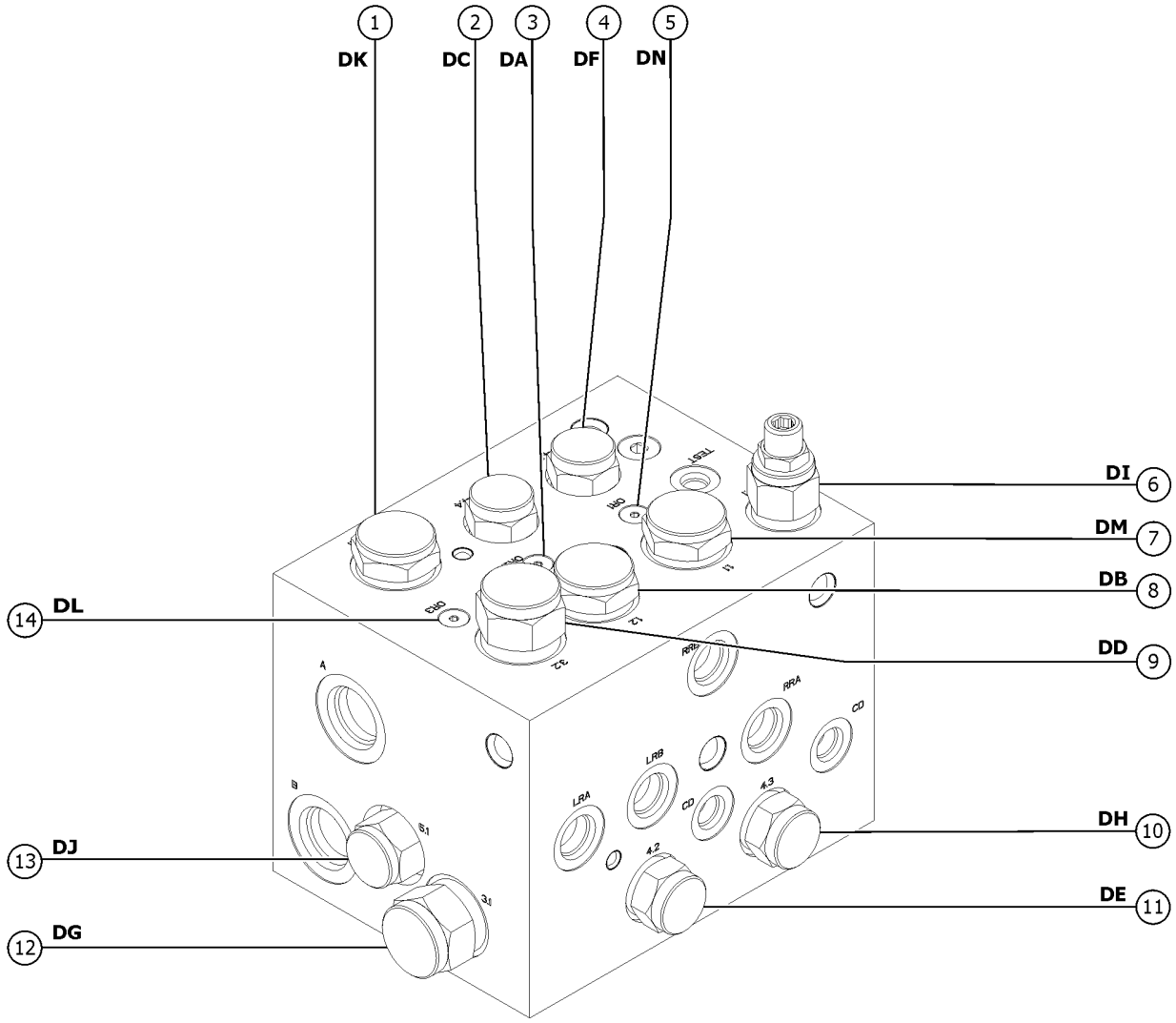
1
DK
2
DC
3
DA
4
DF
5
DN
DI
6
DM
7
DB
8
DD
9
DH
10
DE
11
DL
14
DJ
13
DG
12
TEST
LRA
LRB
RRA
CD
4.3
4.2

Item	*Part No.*	*Description*	*Qty.*
12-	139727GT	SEAL KIT, VALVE	
13	139715GT	VALVE, SHUTTLE, FIXED DJ, Directs oil from low pressure side to hot oil Relief Valve.	
13-	139726GT	SEAL KIT, VALVE	
14	139719GT	ORIFICE, 0.040" DL, Prevents scrub at high steer angles by allowing some bypass flow around the right flow divider	

403.1 Pumps

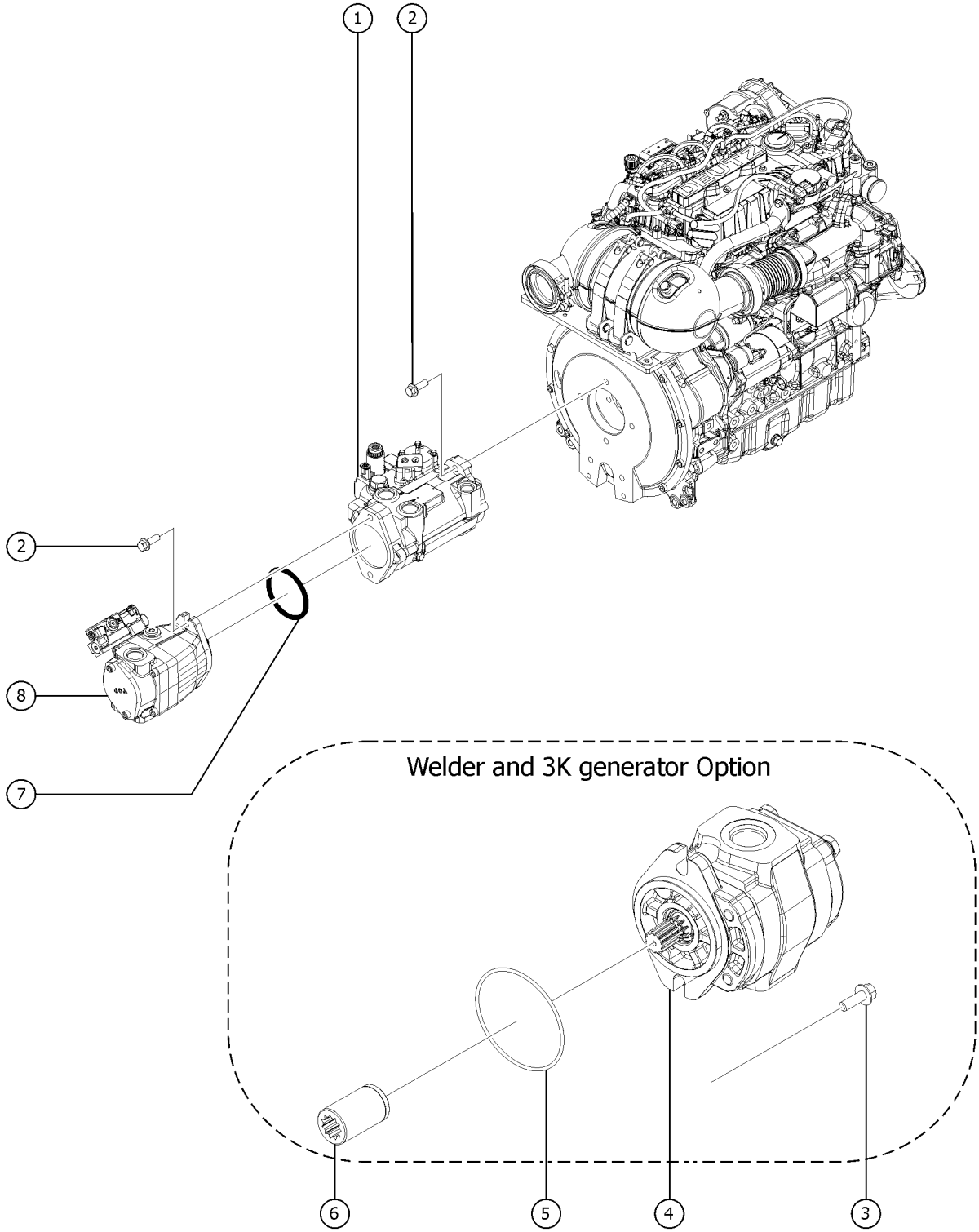

Item	*Part No.*	*Description*	*Qty.*
1	1270946GT	PUMP, DRIVE, M46 HC	1
1-	1274336GT	SEAL KIT, HIGH CURRENT M46 PUMP	
2	1253498GT	SCREW,HHF,1/2-13X1.5,8,ZAG	4
3	231530GT	SCREW,HHF,M10-1.5X25,DIN6921,0.9,ZAB (Welder and 3K generator Option)	2
4	139799GT	PUMP,LIFT,1 SECTION (Welder and 3K generator Option)	1
4-	147550GT	KIT, SEAL, PUMP, 1 SECTION (Welder and 3K generator Option)	
5	83141GT	O-RING, .103 X 3.237, NBR/NTRL, 90D	1
6	1284023GT	GEN PUMP DRIVE LINK (Welder and 3K generator Option)	1
7	43683GT	O-RING,2-042 N674-70***	1
8	1282175GT	PUMP, FUNCTION, 25CC, LS (1284023, drive link not included)	1
8B	1284023GT	GEN PUMP DRIVE LINK	

404.1 Platform Rotate Manifold/ Platform Manifold S-65 XC

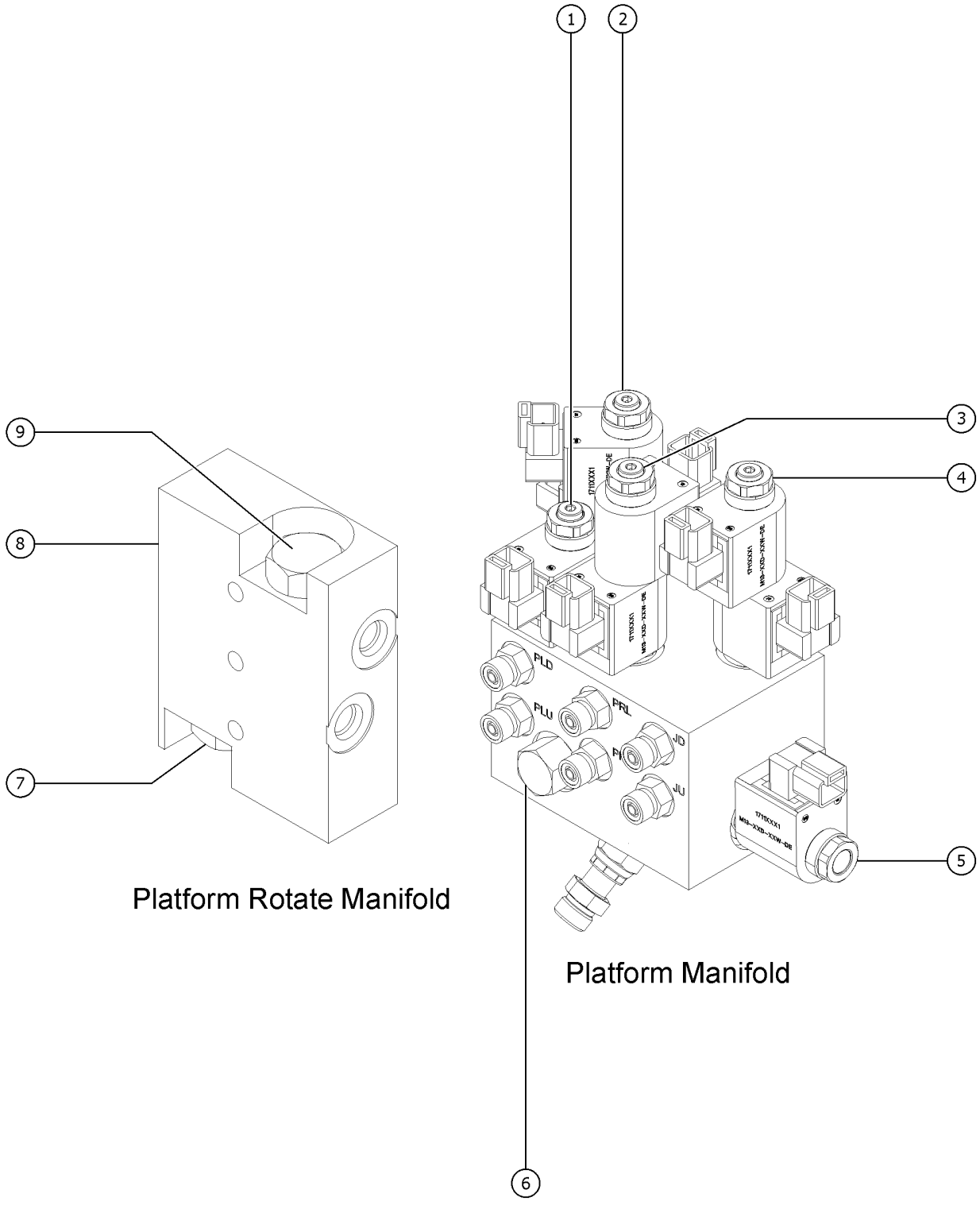

Platform Rotate Manifold

Platform Manifold

Item	Part No.	Description	Qty.
A	1303389GT	MANIFOLD, E-LEVEL, JIB (Complete)	
1	1314183GT	VALVE, SPOOL Platform level up/down	1
1-	1314554GT	SEAL KIT, SOLENOID VALVE	
1-	122148GT	COIL, SOLENOID VALVE,20W	
1-	106079GT	KIT, COIL & NUT SAUER EDH VALVE	
2	1314181GT	VALVE, PROPORTIONAL Platform level proportional valve	1
2-	122120GT	SEAL KIT, SOLENOID VALVE	
2-	1314555GT	COIL, SOLENOID VALVE, 20W	
2-	1314556GT	KIT, COIL & NUT	
3	122121GT	SOLENOID VALVE Platform rotate CW/CCW	1
3-	122120GT	SEAL KIT, SOLENOID VALVE	
3-	122148GT	COIL, SOLENOID VALVE,20W	
3-	52943GT	NUT, SOLENOID VALVE COIL	
4	1314181GT	VALVE, PROPORTIONAL Jib up/down	1
4-	122120GT	SEAL KIT, SOLENOID VALVE	
4-	1314555GT	COIL, SOLENOID VALVE, 20W	
4-	1314556GT	KIT, COIL & NUT	
5	1314182GT	VALVE, SPOOL Spool Valve	1
5-	122120GT	SEAL KIT, SOLENOID VALVE	
5-	122148GT	COIL, SOLENOID VALVE,20W	
5-	106079GT	KIT, COIL & NUT SAUER EDH VALVE	
6	31099GT	VALVE, FLOW REGULATOR Flow control valve	1
6-	74902GT	SEAL KIT, VALVE	
7	62506GT	VALVE - COUNTERBALANCE** Platform rotate left	1
7-	43018GT	SEAL KIT (39345)	
8	1270810GT	MANIFOLD, ROTATOR, CB	1
8-	62507GT	O-RING, ROTATOR MANIFOLD	2
9	62506GT	VALVE - COUNTERBALANCE** Platform rotate right	1

404.1 Platform Rotate Manifold/ Platform Manifold S-65 XC

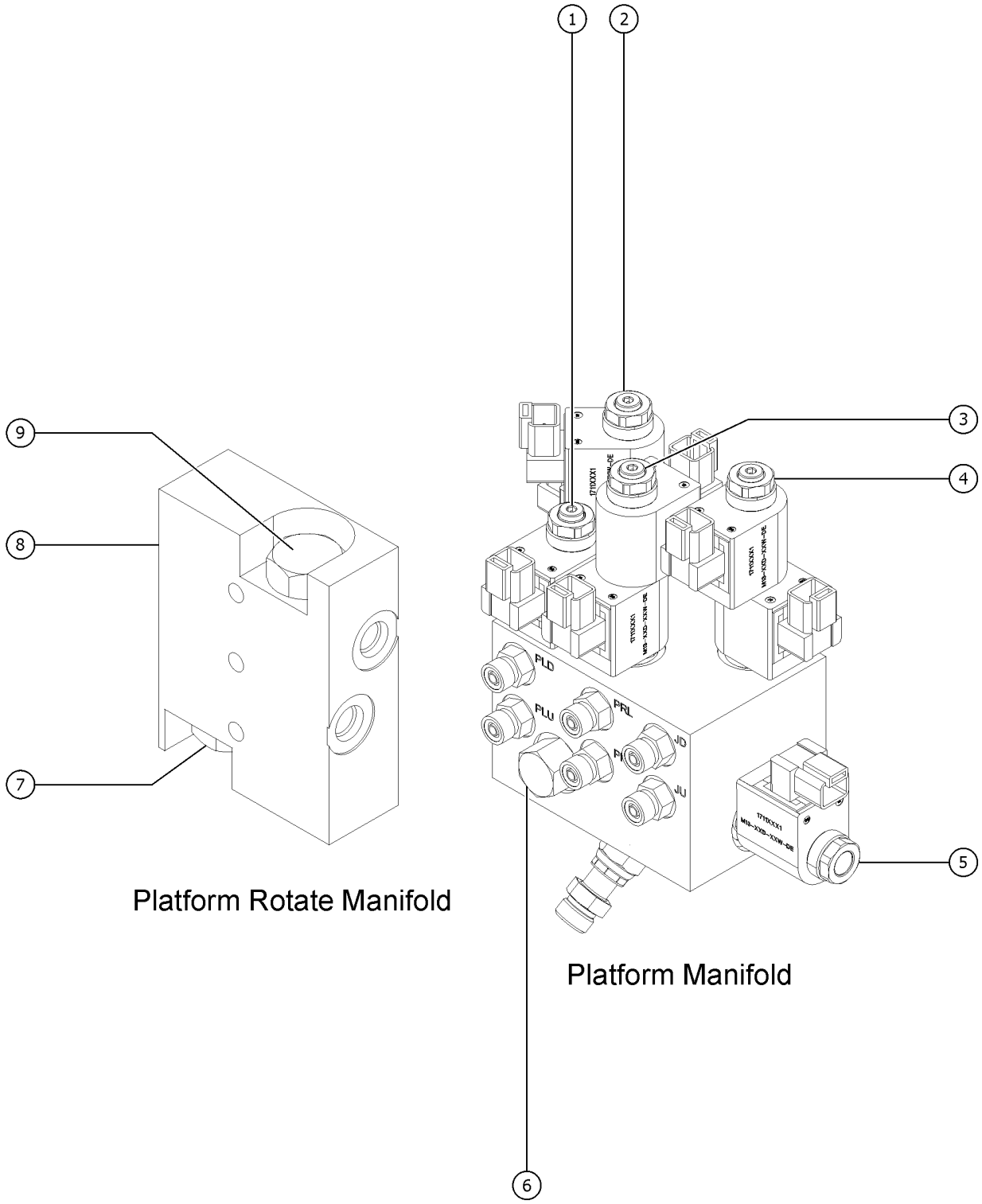

Platform Rotate Manifold

Platform Manifold

Item	*Part No.*	*Description*	*Qty.*
9-	43018GT	SEAL KIT (39345)	

404.2 Platform Rotate Manifold/ Platform Manifold S-60 XC

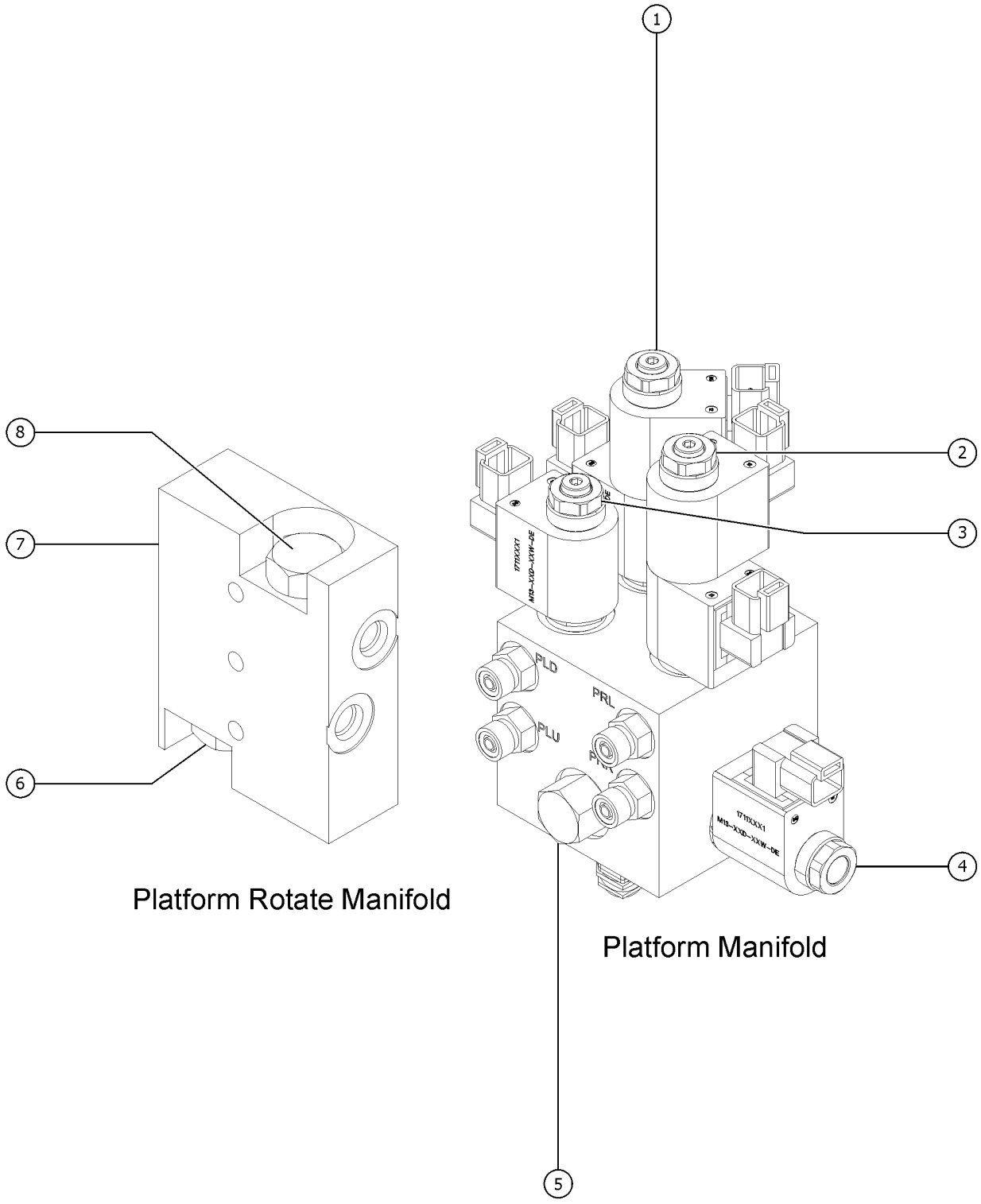

Item	Part No.	Description	Qty.
A	1303390GT	MANIFOLD, E-LEVEL, NON-JIB (Complete)	
1	1314181GT	VALVE, PROPORTIONAL Proportional valve (Platform level & Jib Up/Down)	1
1-	122120GT	SEAL KIT, SOLENOID VALVE	
1-	1314555GT	COIL, SOLENOID VALVE, 20W	
1-	1314556GT	KIT, COIL & NUT	
2	122121GT	SOLENOID VALVE Platform rotate CW/CCW	1
2-	122120GT	SEAL KIT, SOLENOID VALVE	
2-	122148GT	COIL, SOLENOID VALVE,20W	
2-	52943GT	NUT, SOLENOID VALVE COIL	
3	1314183GT	VALVE, SPOOL Platform level up/down	1
3-	1314554GT	SEAL KIT, SOLENOID VALVE	
3-	122148GT	COIL, SOLENOID VALVE,20W	
3-	106079GT	KIT, COIL & NUT SAUER EDH VALVE	
4	1314182GT	VALVE, SPOOL Spool Valve	1
4-	122120GT	SEAL KIT, SOLENOID VALVE	
4-	122148GT	COIL, SOLENOID VALVE,20W	
4-	106079GT	KIT, COIL & NUT SAUER EDH VALVE	
5	31099GT	VALVE, FLOW REGULATOR Flow control valve	1
5-	74902GT	SEAL KIT, VALVE	
6	62506GT	VALVE - COUNTERBALANCE** Platform rotate left	1
6-	43018GT	SEAL KIT (39345)	
7	1270810GT	MANIFOLD, ROTATOR, CB	1
7-	62507GT	O-RING, ROTATOR MANIFOLD	2
8	62506GT	VALVE - COUNTERBALANCE** Platform rotate right	1
8-	43018GT	SEAL KIT (39345)	

405.1 Generator Manifold

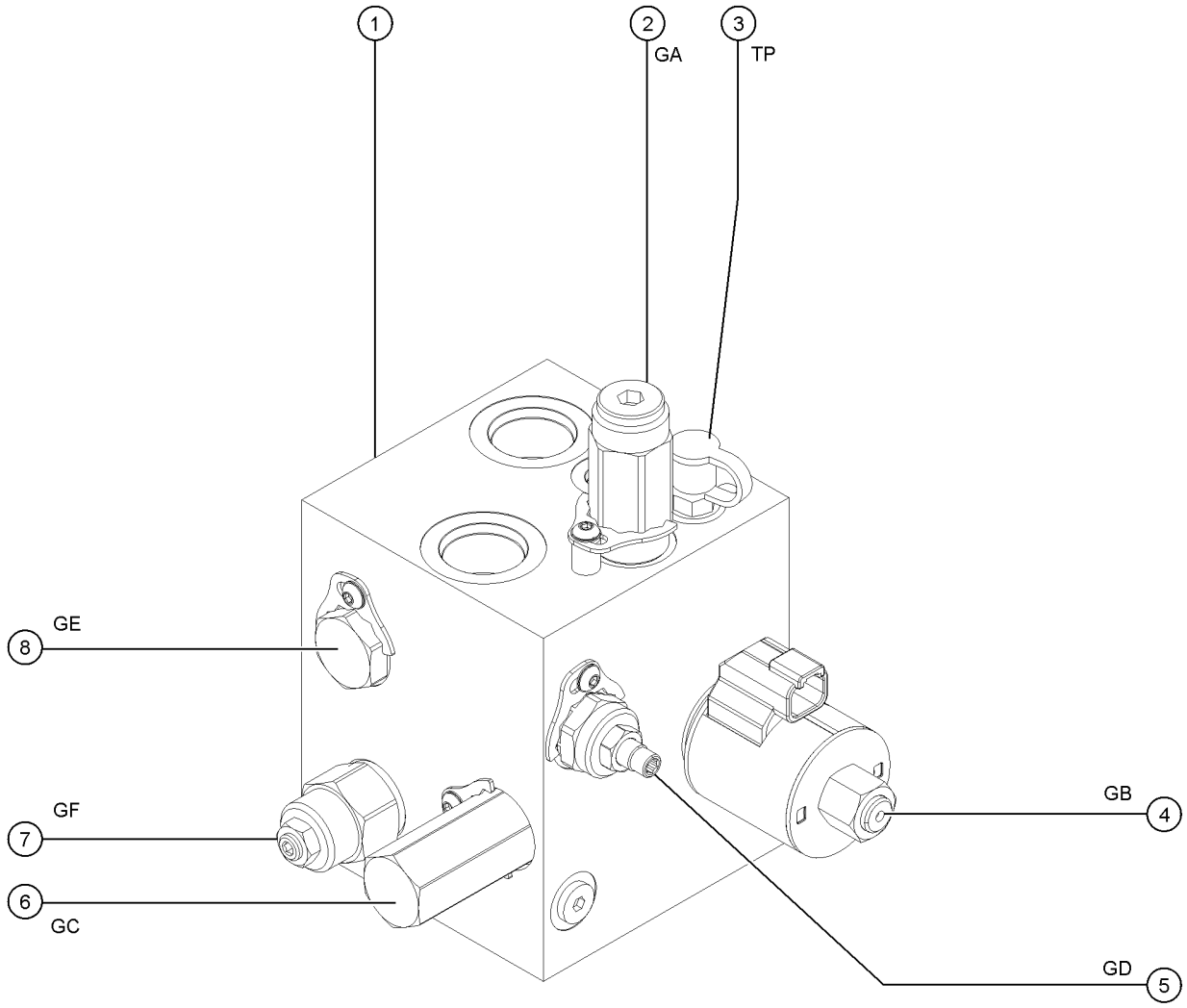

405.1 Generator Manifold

Item	Part No.	Description	Qty.
A	115048GT	#6 PLUG	3
A	1285147GT	PLUG, PORT, SAE4, 6103004	1
1	1281789GT	MANIFOLD, HYD, LIFT POWER, WELDER GENERATOR (Complete)	1
2	1285141GT	VALVE, RELIEF, RV50-26H-0-P-50/36	1
2-	1285145GT	KIT, LOCKDOWN, HYD VALVE, 5965000.1000M	
3	48997GT	NIPPLE,DIAGNOSTIC,#4	1
3-	48880GT	CAP,DIAGNOSTIC NIPPLE	
4	1285143GT	VALVE, SOLENOID, HSV10-21-0-U-0	1
4-	97469GT	COIL#10 E-COIL,10V ZENER DIODE	
4-	1285144GT	KIT, LOCKDOWN, HYD VALVE, 5965000.1063	
5	1285142GT	VALVE, NEEDLE, NV10-22A-0-N	1
5-	1285146GT	KIT, LOCKDOWN, HYD VALVE, 5965000.1000	
6	75462GT	VALVE,DIFFERENTIAL SENSE230PSI	1
6-	62337GT	SEAL KIT, VALVE	
6-	1285146GT	KIT, LOCKDOWN, HYD VALVE, 5965000.1000	
7	1284399GT	VALVE, COUNTERBALANCE, 3:1 1000PSI, CBEA-LIN	1
8	62127GT	VALVE-CHECK,SIZE 10(59599)	1
8-	1285146GT	KIT, LOCKDOWN, HYD VALVE, 5965000.1000	

501.1 Deutz D2011L03i, View 1

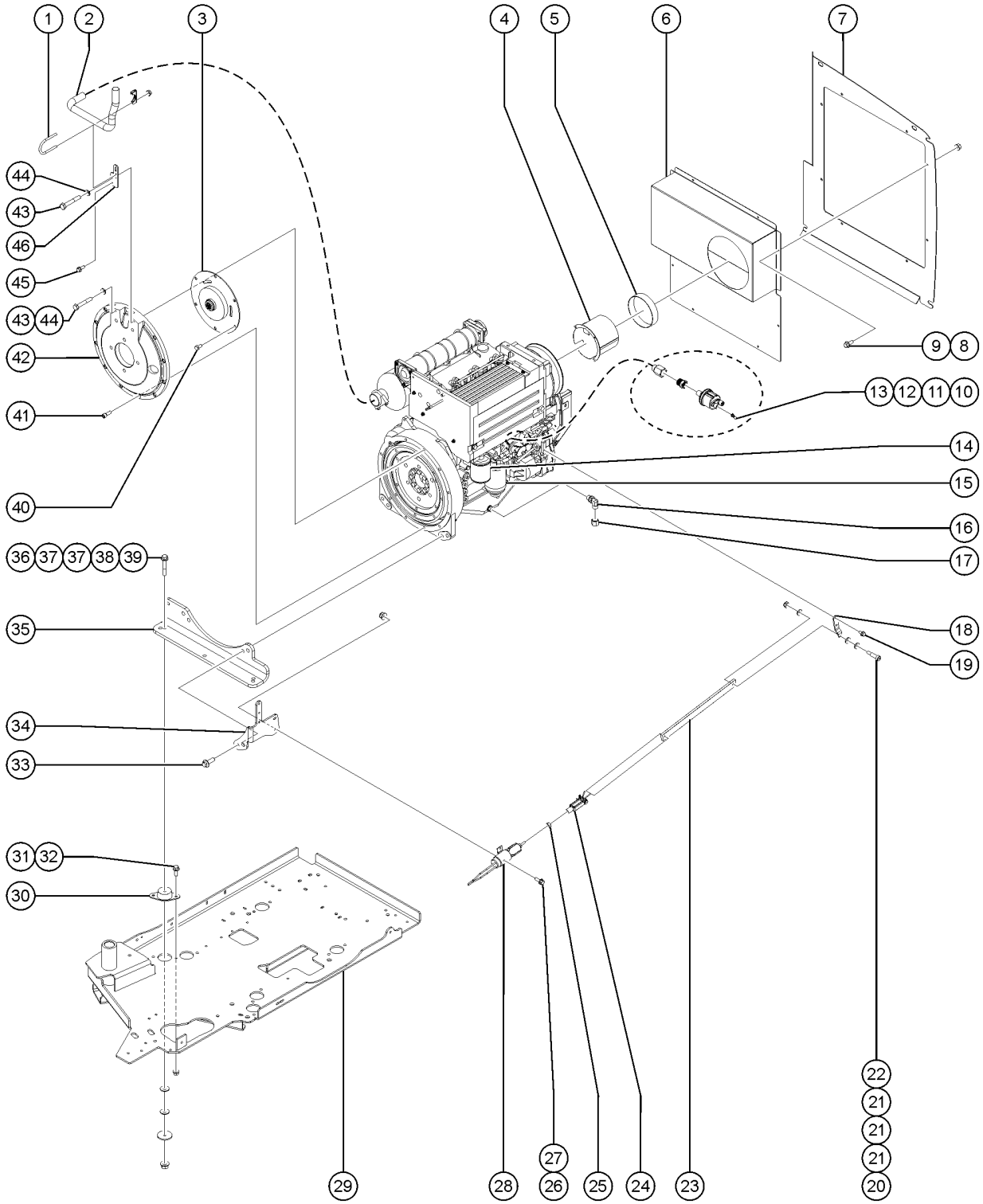

501.1 Deutz D2011L03i, View 1

Item	Part No.	Description	Qty.
A	160687GT	ENGINE,DEUTZ,D2011L03i TPEM	1
1	70385GT	CLAMP,EXHAUST,2.00 PLATED	1
2	822693GT	TAILPIPE, DEUTZ, TPEM & ROW	1
3	128004GT	COUPLER,15 TOOTH,FBA,SAE8***	1
4	101140GT	WELDMENT, AIR INTAKE TUBE	1
5	119219GT	TRIM,EDGE,1/8X3/4 END BULB	10 inches
5-	31523GT	CLAMP,HOSE,8.50 DIA***	1
6	1267235GT	FORMING,DEUTZ AIR INTAKE BAFFL	1
7	106172GT	BAFFLE,AIR INTAKE***	1
8	1256855GT	SCREW,HHF,1/4-20X.625,8,ZAG	8
9	824027GT	NUT, TL FLG, 1/4-20, G, ZAG	8
10	13597GT	TERMINAL,#10 RING,BLUE	1
11	30810GT	SENDING UNIT,OIL PRESSURE***	1
12	106033GT	ADAPTER,NPT 6-4	1
13	106034GT	ADAPTER,M18	1
14	49924GT	FILTER,OIL,DEUTZ F4L1011F Genie Genuine Part. See PN 1255653 for compatible aftermarket replacement.	1
15	29560GT	FILTER,FUEL/WTR SEP, DTZ 1008 Genie Genuine Part. See PN 1254826 for compatible aftermarket replacement.	1
16	54428GT	FITTING,HYDRAULIC,90DEG,O-RING	1
17	69775GT	CAP,520112-8	1
18	1267237GT	LEVER,GOVERNOR ACTUATOR**	1
19	237238GT	SCREW,HHF,M6-1.0X12,DIN6921,10	2
20	1257076GT	BOLT,SHS,1/4-28X4,ZAG	1
21	825355GT	WASHER,FLAT,M6,DIN125,ZAB	3
22	5365GT	NUT,NYLOCK,10-24	1
23	120234GT	THROTTLE LINKAGE,DIESEL***	1
24	21130GT	CLEVIS YOKE-1/4-28,PLTD W/PIN	1
25	824041GT	NUT, 1/4-28, 8, ZAG	1

501.1 Deutz D2011L03i, View 1

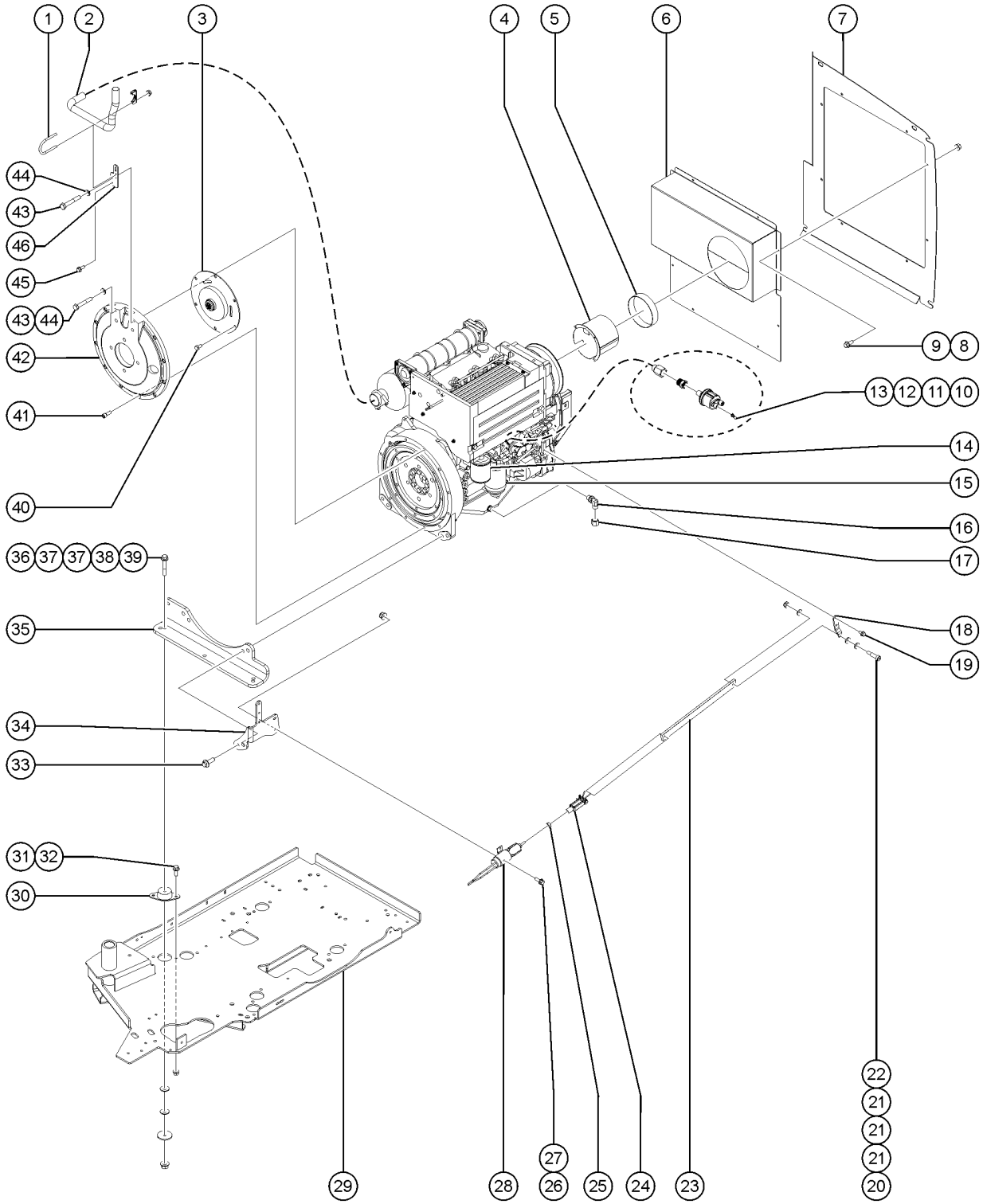

501.1 Deutz D2011L03i, View 1

Item	Part No.	Description	Qty.
26	824078GT	SCREW,HHF,1/4-20X.75,8,ZAG	2
27	1277924GT	NUT,NYLOCK FLG,1/4-20,F,ZAG	2
28	161087GT	ASSY,SOLENOID THR_ACT RPM Z45	
29		REF. WELDMENT, ENGINE TRAY WITH BEARINGS (Refer to 528.1)	1
30	70452GT	ISOLATOR,ENGINE VIBRATION***	2
31	824090GT	SCREW,HHF,3/8-16X1,8,ZAG	4
32	1274322GT	NUT,NYLOCK FLG,3/8-16,F,ZAG	4
33	1251899GT	SCREW,HHF,M14-2.0 X 40,DIN 6921,10.9, ZAB	4
34	1270141GT	MNT BRKT, POS BATT CABLE, SOLENOID	1
34-	110149GT	CABLE TIE,DFT MOUNT,BLK,6.5"	2
35	1267238GT	FORMING,REAR ENGINE MOUNT***	1
36	1295334GT	TERM QC TAB - #8 RING, .250, 45 DEG, BRASS	2
37	1255760GT	WASHER,FLAT,1/2,USS,ZAG	4
38	1256283GT	WASHER,FLAT,.5X2.25X.188,ZAG	2
39	1274172GT	NUT,NYLOCK FLG,1/2-13,G,ZAG	2
40	825351GT	SCREW,HHC,M10-1.5X20,DIN933,10.9,ZAB	6
41	1255666GT	SCREW,SHC,M10-1.50X30,DIN912,1	9
42	70381GT	COVER,FLYWHEEL CASTING	1
43	1257837GT	SCREW,HHC,M10-1.5X65,DIN931,10.9,ZAB	2
44	824142GT	WASHER, LOCK, M10, ZAB	2
45	1255469GT	SCREW,HHF,1/2-13X1.25,8,ZAG	1
46	1267239GT	FORMING,SOLENOID MOUNT	1

502.1 Deutz D2011L03i, View 2

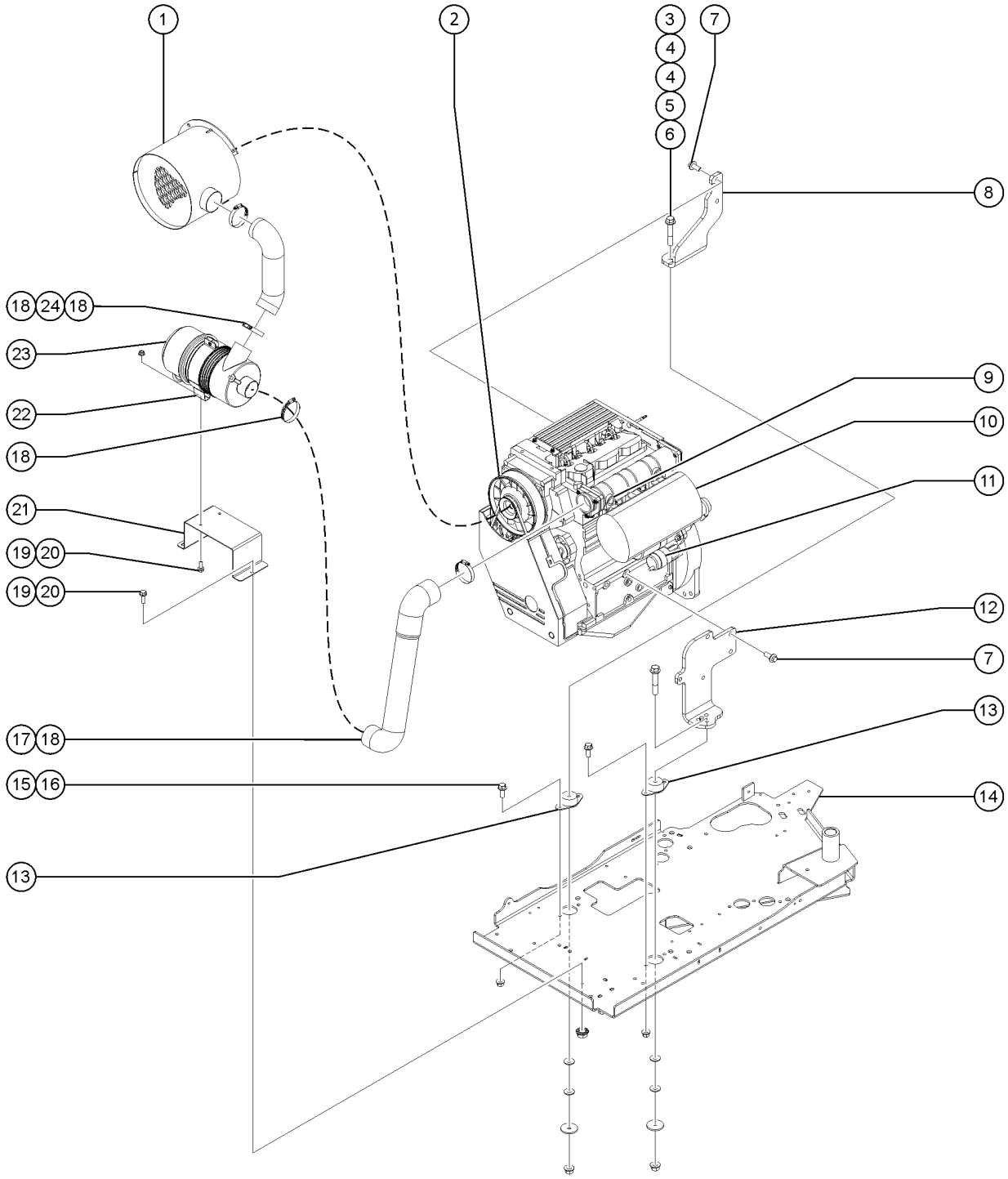

502.1 Deutz D2011L03i, View 2

Item	Part No.	Description	Qty.
1		Ref. WELDMENT,AIR INTAKE TUBE	
2	35586GT	ALTERNATOR, DEUTZ F3L10/F4L10*	1
3	1251994GT	SCREW,HHF,1/2-13X3,8,ZAG	2
4	1255760GT	WASHER,FLAT,1/2,USS,ZAG	4
5	1256283GT	WASHER,FLAT,.5X2.25X.188,ZAG	2
6	1274172GT	NUT,NYLOCK FLG,1/2-13,G,ZAG	2
7	1256776GT	SCREW,HHF,M14-2.0X35,DIN6921,10.9,ZAB	5
8	120258GT	FORMING,ENGINE MOUNT,FR*** to SN S65XCH-46664	1
8B	70460GT	FORMING,ENGINE MOUNT,FR*** from SN S65XCH-46665	1
9	31408GT	GLOW PLUG,L1011	1
10	89774GT	MUFFLER, DEUTZ F3L 2011F	1
11	70376GT	STARTER,DEUTZ,F4L1011F/F3L1011	1
12	120259GT	FORMING,ENGINE MOUNT,FL to SN S65XCH-46664	1
12B	70461GT	FORMING,ENGINE MOUNT,FL*** from SN S65XCH-46665	1
13	70452GT	ISOLATOR,ENGINE VIBRATION***	2
14		Ref. WELDMENT, ENGINE TRAY refer.528.1	1
15	824090GT	SCREW,HHF,3/8-16X1,8,ZAG	4
16	1274322GT	NUT,NYLOCK FLG,3/8-16,F,ZAG	4
17	70375GT	HOSE,AIR CLEANER	1
18	30971GT	CLAMP,HOSE,3.00"	4
19	824086GT	SCREW,HHF,5/16-18X1,8,ZAG	5
20	1255805GT	NUT,SERRATED,5/16-18,8,ZAG	5
21	70351PGT	FORMING,AIR CLEANER MOUNT PNTD	1
22	53952GT	BRKT,AIR CLEANER ORIENTATION**	1
23	63463GT	AIR CLEANER,NELSON***	1
23-	62420GT	FILTER,AIR***	
23-	58415GT	CLIP,AIR CLEANER END CAP***	
23-	62420GT	FILTER,AIR***	

502.1 Deutz D2011L03i, View 2

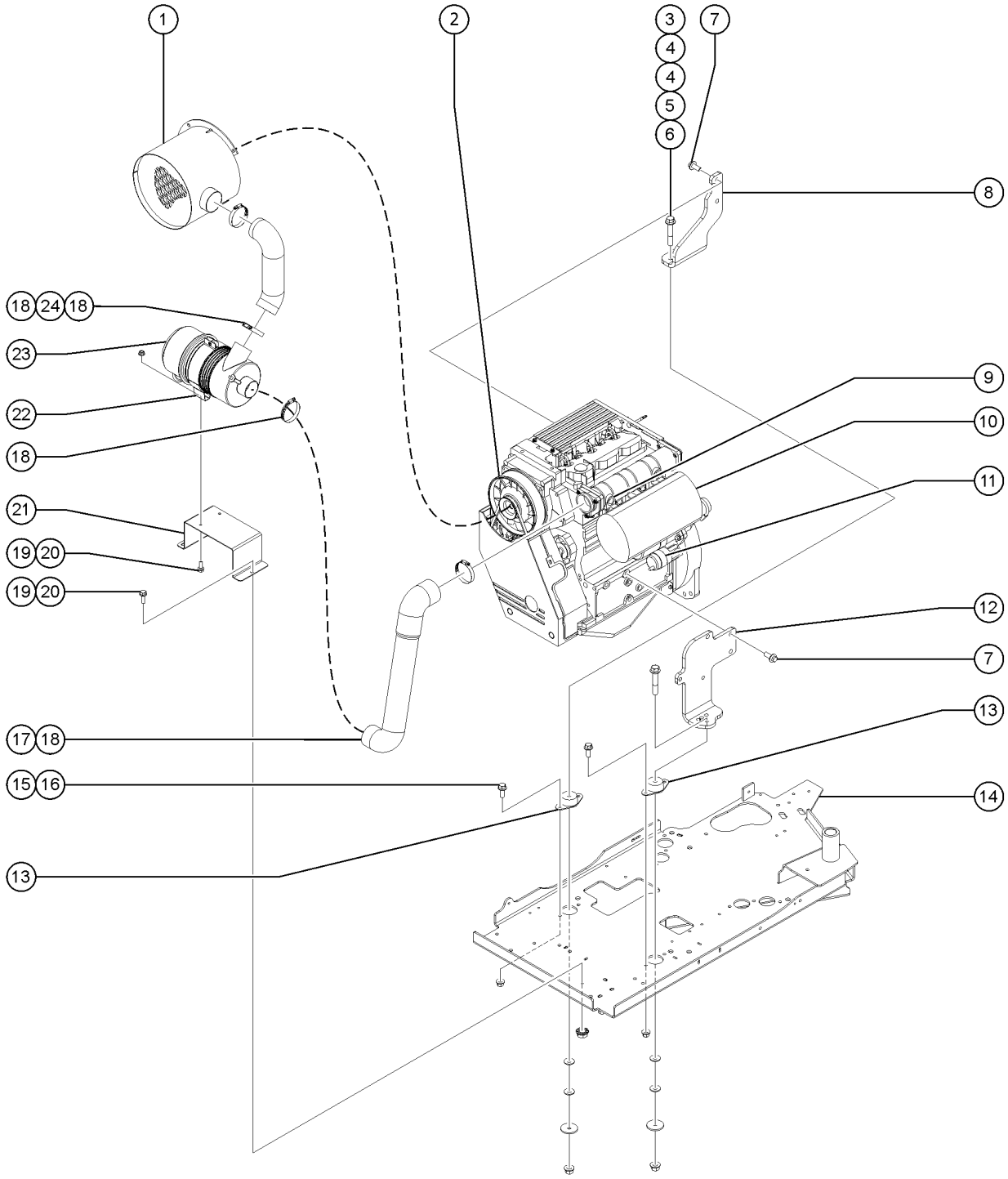

502.1 Deutz D2011L03i, View 2

Item	*Part No.*	*Description*	*Qty.*
23-	65810GT	BAFFLE, AIR CLEANER (27915)**	
23-	52866GT	EVACUATOR VALVE-AIR CLEANER	
23-	6888GT	SCREW, HHC, 1/4-20 X 1	
23-	5397GT	WASHER, FLAT, USS, 5/16-18	
23-	6782GT	NUT, NYLOCK, 5/16-18	
24	101006GT	TUBE,AIR CLEANER INLET	1

503.1 Ford MSG-425 EFI, View 1

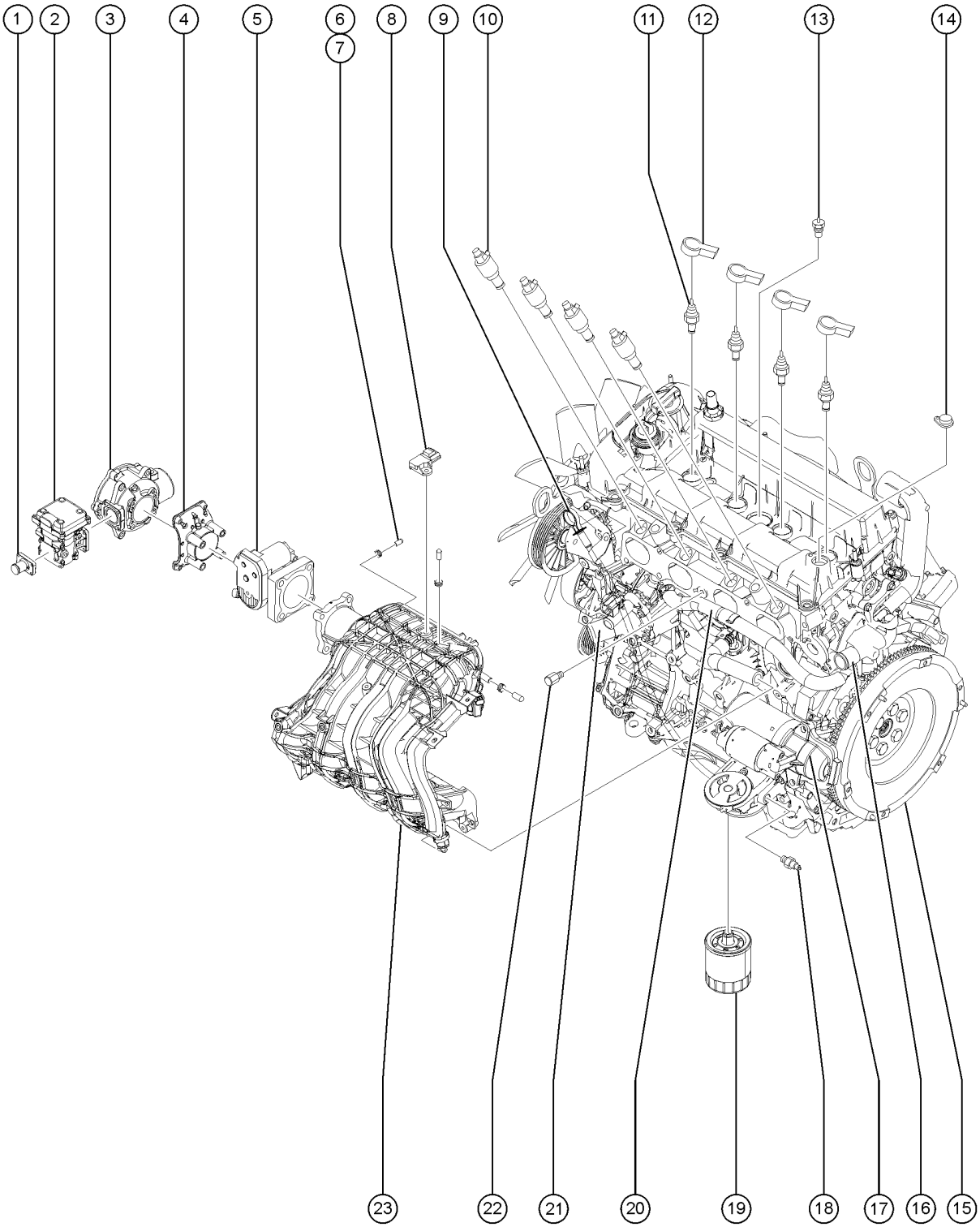

503.1 Ford MSG-425 EFI, View 1

Item	Part No.	Description	Qty.
A		For internal engine parts, contact engine dealer	
B	128165GT	RELAY,PWR/FUEL,FORD DSG423	
C	128166GT	RELAY,STARTER,FORD DSG/MSG	
D	215294GT	ENGINE HARNESS, MSG425	1
E	215295GT	SOLENOID, VAR. TIM, MSG425	
F	236799GT	ENGINE KIT,FORD MSG425 gas/LPS	
1	215285GT	FITTING, DEPR LP, MSG425	1
2	215284GT	REGULATOR,LP PRESSURE,MSG425	1
3	215280GT	MIXER, MSG425	1
3-	1313038GT	INLET SEAL, MIXER, MSG425 (215280)	
3-	1313039GT	O-RING, MIXER, MSG425 (215280)	
3-	1313040GT	QUAD RING, MIXER, MSG425 (215280)	
3-	215281GT	O-RING, SMOOTH, MSG425	
3-	215282GT	O-RING, RIBBED, MSG425	
4	215283GT	ADAPTER, MIXER/THRO, MSG425	1
5	88451GT	THROTTLE ACTUATOR*(BOSCH)	1
5-	88452GT	GASKET,THROTTLE ACTUATOR***	
6	217820GT	CAP, INT. MFLD. VAC, MSG425	2
7	119568GT	CLAMP,SPRING,1/2"	3
8	119475GT	MAP SENSOR, DSG-423	1
8-	119965GT	COVER,DUST,IDLER,FORD DSG423	
9	220230GT	DIPSTICK, MSG425	1
9-	220231GT	O-RING,DIPSTICK,MSG425 (not shown, use with dipstck part 220230)	
9-	824028GT	NUT, TL FLG, 5/16-18, G, ZAG (not shown, use to mount dipstck part 220230)	
9-	824085GT	SCREW, HHF, 5/16-18 X .75, 8, ZAG (not shown, use to mount dipstck part 220230)	
10	215299GT	INJECTOR, FUEL, MSG425	4
11	215287GT	SPARK PLUG, MSG425	4
12	215314GT	COIL ASSY, MSG425	4

503.1 Ford MSG-425 EFI, View 1

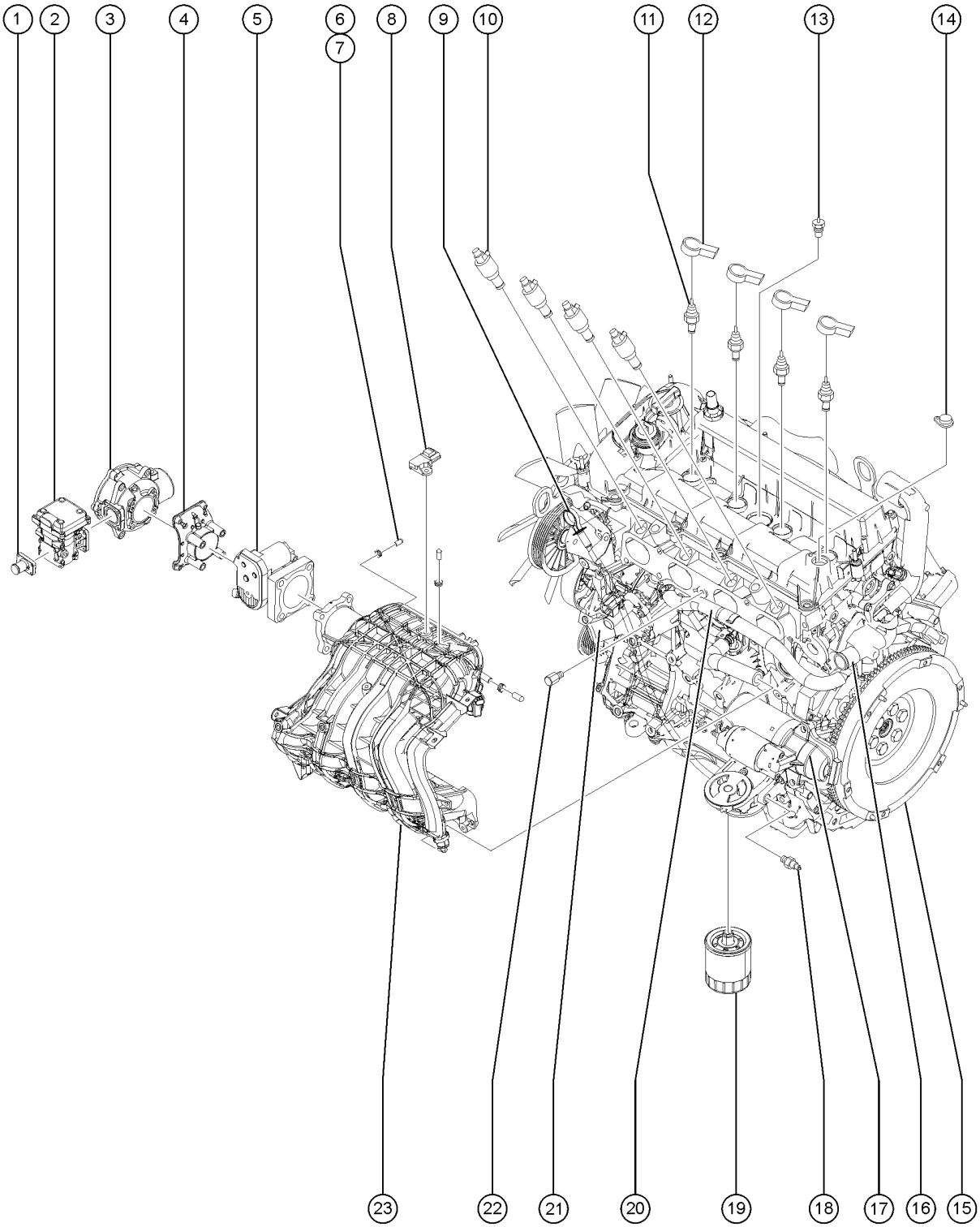

503.1 Ford MSG-425 EFI, View 1

Item	Part No.	Description	Qty.
13	215300GT	SENSOR, CYL. HEAD TEMP, MSG425	1
14	215308GT	SENSOR, CAM POS, MSG425	1
15	215278GT	FLYWHEEL ASSY, MSG425	1
16	215275GT	ADAPTER, WATER CONN, MSG425	1
17	1264894GT	KIT, HD STARTER INSTALL, MSG-4	1
17B	128166GT	RELAY,STARTER,FORD DSG/MSG for 215293	
17C	217823GT	STARTER PLUG SEAL, MSG425 for 215293	
18	215301GT	SWITCH, OIL PRES, MSG425	1
19	119139GT	OIL FILTER,DSG-423	1
19B	1277968GT	SEPERATOR ASSY,OIL,FORD MSG	1
20	215302GT	HOSE, COOLANT BYPASS, MSG425	1
21	215310GT	THERMOSTAT W/HOUSING, MSG425	1
22	215309GT	SENSOR, KNOCK, MSG425	1
23	215305GT	INTAKE MANIFOLD, MSG425	1
23B	1277969GT	GASKET,INTAKE MANIFOLD,MSG 425 for 215305	1

504.1 Ford MSG-425 EFI, View 2

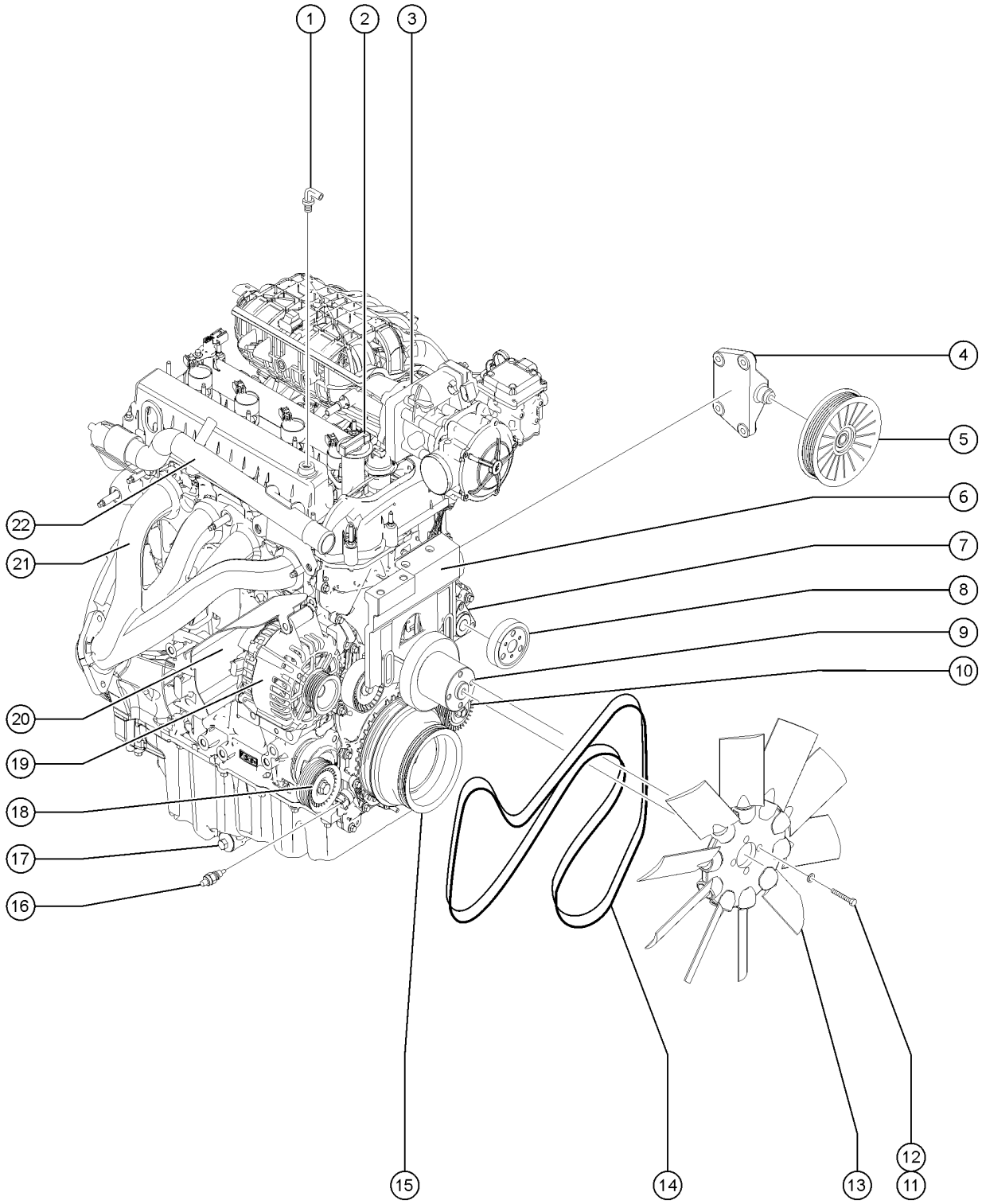

504.1 Ford MSG-425 EFI, View 2

Item	Part No.	Description	Qty.
A		For internal engine parts, contact engine dealer	
1	119474GT	VALVE,PCV FORD DSG-423	1
1-	75631GT	HOSE,AIR 3/8	
2	58632GT	CAP,OIL FILLER,FORD DSG 423	1
3	215279GT	PLATE, INT. MFLD ADAP, MSG425	
4	119477GT	IDLER BRACKET	1
5	215298GT	UPPER IDLER PULLEY, MSG425	1
6	1283575GT	KIT,FAN SUPPORT RETRO,FORD MSG For first time replacement	1
6-	1283571GT	BRACKET,FAN,FORD MSG included in kit 1283575GT	1
6-	1283572GT	BRACKET,IDLER,FORD MSG included in kit 1283575GT	1
6-	1283573GT	BOLT, BRACKET, SUPPORT,FORD MSG included in kit 1283575GT	2
6-	1283574GT	SCREW,HHC,M8X1.25.80 included in kit 1283575GT	1
7	215288GT	WATER PUMP, MSG425	1
8	215289GT	WATER PUMP PULLEY, MSG425	1
9	215271GT	FAN PULLEY, MSG425	1
9-	215270GT	FAN SPACER, MSG425	1
10	215313GT	LOWER IDLER PULLEY, MSG425	1
11	32309GT	SCREW,HHC,M8 X 60MM X 1.25	
12	49408GT	WASHER, LOCK, M8	
13	215269GT	FAN, MSG425	1
14	215291GT	BELT, FEAD, MSG425 (shown)	1
14B	215274GT	FAN DRIVE BELT, MSG425 Fan belt (not shown)	
15	215273GT	CRANK PULLEY, EXT, MSG425	1
16	215307GT	SENSOR, CRANK POS, MSG425	1
17	215311GT	PLUG, OIL DRAIN, MSG425	1
18	215290GT	PULLEY/TENSIONER, MSG425	1
19	1300536GT	ALTERNATOR,DSG-423,BOSCH	1
19B	217824GT	CHARGE WIRE, MSG425	

504.1 Ford MSG-425 EFI, View 2

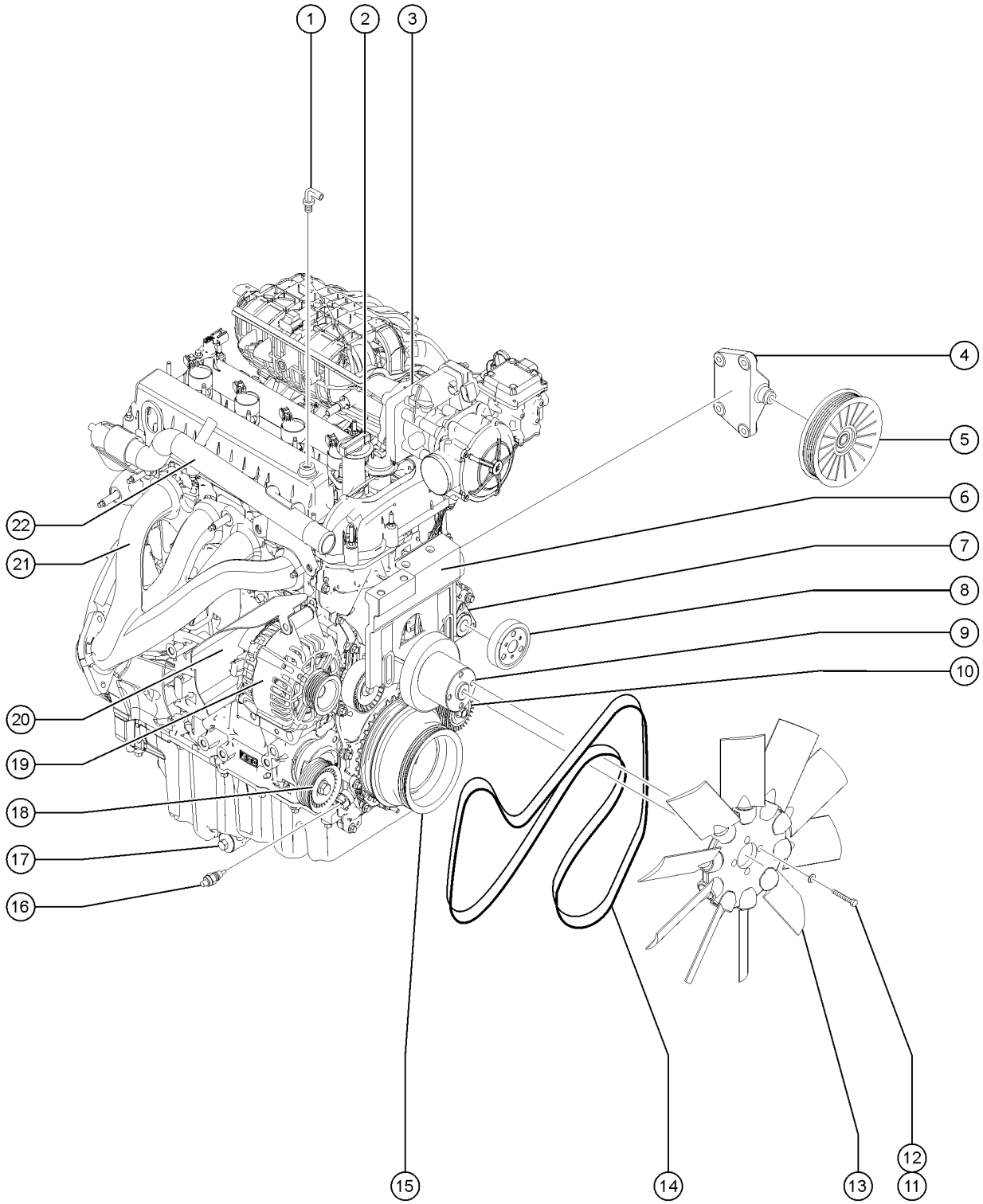

504.1 Ford MSG-425 EFI, View 2

Item	*Part No.*	*Description*	*Qty.*
19C	1253749GT	ALTERNATOR, MSG425 LPS LPS engine only	1
20	227309GT	HEAT SHIELD,ALTERNATOR,FORD	1
21	215276GT	EXHAUST MANIFOLD, MSG425	1
21-	215277GT	GASKET, MSG425	
21-	217822GT	NUT, EXH. MANIFOLD, MSG425	
21-	823816GT	GASKET,EXHAUST,FORD MSG	
22	236373GT	PIPE,COOLANT RETURN, MSG425	1

505.1 Ford MSG-425 EFI, View 3

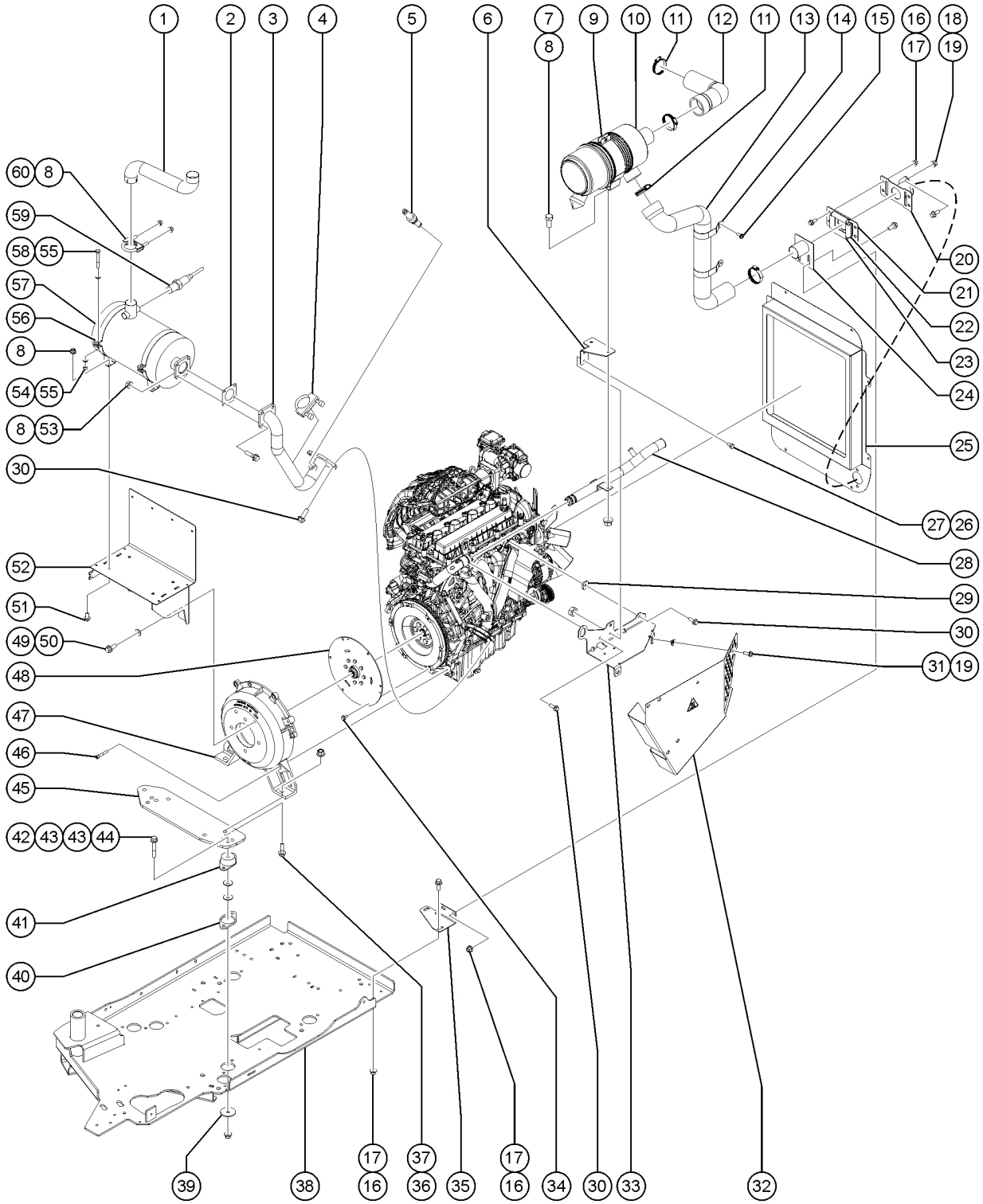

505.1 Ford MSG-425 EFI, View 3

Item	Part No.	Description	Qty.
A	236799GT	ENGINE KIT,FORD MSG425 gas/LPS	1
1	1264262GT	TAILPIPE, FORD MSG425	1
2	72343GT	GASKET,EXH FLANGE-FORD/PERKINS	1
3	218576GT	WDMT,HEADER PIPE,MSG425	1
4	32064GT	CLAMP,MUFFLER,1.75 INCH	2
5	215320GT	SENSOR, O2, MSG425	1
6	216367GT	REF. FORMING,AIR CLEANER MOUNT	1
7	1256464GT	SCREW,HHC,5/16-18X.75,8,ZAG	2
8	824028GT	NUT, TL FLG, 5/16-18, G, ZAG	12
9	53952GT	BRKT,AIR CLEANER ORIENTATION**	1
10	111634GT	AIR CLEANER,FORD,T3	1
10-	227988GT	VACUATOR VALVE	
10-	77295GT	FILTER ELEMENT,AIR,NOLFF LPG	
11	45435GT	CLAMP,HOSE,2.50"***	4
12	237146GT	HOSE, CLEAN AIR, MSG425	1
13	235659GT	HOSE, RAW AIR, MSG425	1
14	237385GT	HOSE HANGER, MSG425	2
15	824220GT	SCREW,PHPM SEMS ET,10-24X.5,ZA	2
16	824029GT	NUT, TL FLG, 3/8-16, G, ZAG	8
17	824090GT	SCREW,HHF,3/8-16X1,8,ZAG	8
18	824027GT	NUT, TL FLG, 1/4-20, G, ZAG	2
19	1256855GT	SCREW,HHF,1/4-20X.625,8,ZAG	4
20	1252050GT	WDMT, AIR INTAKE, MSG425	1
21	1252052GT	PLATE, SHROUD INTAKE, MSG425	1
22	1257450GT	SEAL,AIR INTAKE ADAPTER,LOWER	2
23	1259586GT	SEAL,AIR INTAKE ADAPTER,UPPER	2
24	1271058GT	WELDMENT, AIR INTAKE, MSG425	1
25		Ref. SHROUD, RADIATOR, FORD MSG425 (refer to 506.1)	

505.1 Ford MSG-425 EFI, View 3

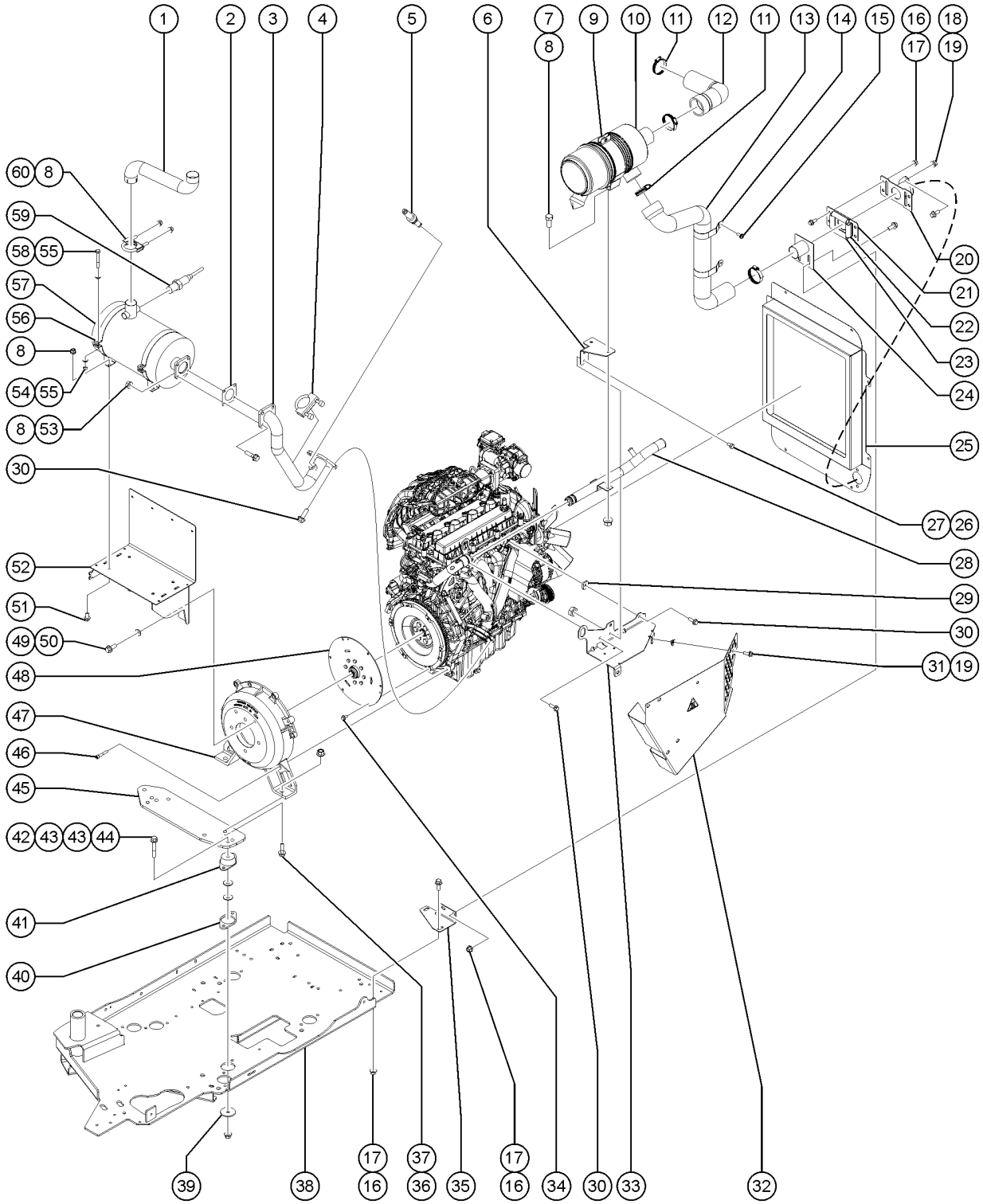

Item	Part No.	Description	Qty.
26	1257489GT	SCREW,HHC,3/8-16X.625,8,ZAG	2
27	824038GT	NUT, TL JAM, 3/8-16, A, ZAG	2
28	236373GT	PIPE,COOLANT RETURN, MSG425	1
29	215776GT	SPACER, AIR CLEANER, MSG425	1
30	232874GT	SCREW,HHF,M10-1.5X30,DIN6921,10.9,ZAB	8
31	56912GT	SPRING CLIP,1/4-20,.025-.15X.54,ZAG	2
32	160541GT	WDMT, HEAT SHIELD, MSG425	1
33	218668GT	FORMING, HEAT SHIELD MOUNT	1
34	1251983GT	SCREW,HHF,M8-1.25X16,DIN6921,10.9,ZAB	6
35	1271056GT	FORMING, AIR INTAKE, MSG425	1
36	826171GT	SCREW,HHF,1/2-13X1.75,ZAG LPS only	2
36B	1253498GT	SCREW,HHF,1/2-13X1.5,8,ZAG gas/LPS	2
37	1251997GT	NUT,TL FLG,1/2-13,G,ZAG	2
38		REF. WELDMENT, ENGINE TRAY (refer to 528.1)	
39	1256283GT	WASHER,FLAT,.5X2.25X.188,ZAG	4
40	216167GT	SPACER,ISOLATOR,MSG425 LPS only	2
41	70452GT	ISOLATOR,ENGINE VIBRATION***	4
42	1251994GT	SCREW,HHF,1/2-13X3,8,ZAG	2
43	1255760GT	WASHER,FLAT,1/2,USS,ZAG	4
44	1274172GT	NUT,NYLOCK FLG,1/2-13,G,ZAG	2
45	236422GT	ENGINE MOUNT, REAR, MSG425	1
46	1257481GT	SCREW,SHC,M10-1.5X60,DIN912,12.9,ZAB LPS only	7
46B	1255666GT	SCREW,SHC,M10-1.50X30,DIN912,1 gas/LPS	3
47	119052GT	PUMP MOUNT,FORD DSG423	1
48	214446GT	COUPLER,15T,FBA,SAE 8,MSG425	1
49	1255469GT	SCREW,HHF,1/2-13X1.25,8,ZAG	2
50	825353GT	WASHER,FLAT,1/2,SAE,HRD,ZAG	2
51	824085GT	SCREW, HHF, 5/16-18 X .75, 8, ZAG	4

505.1 Ford MSG-425 EFI, View 3

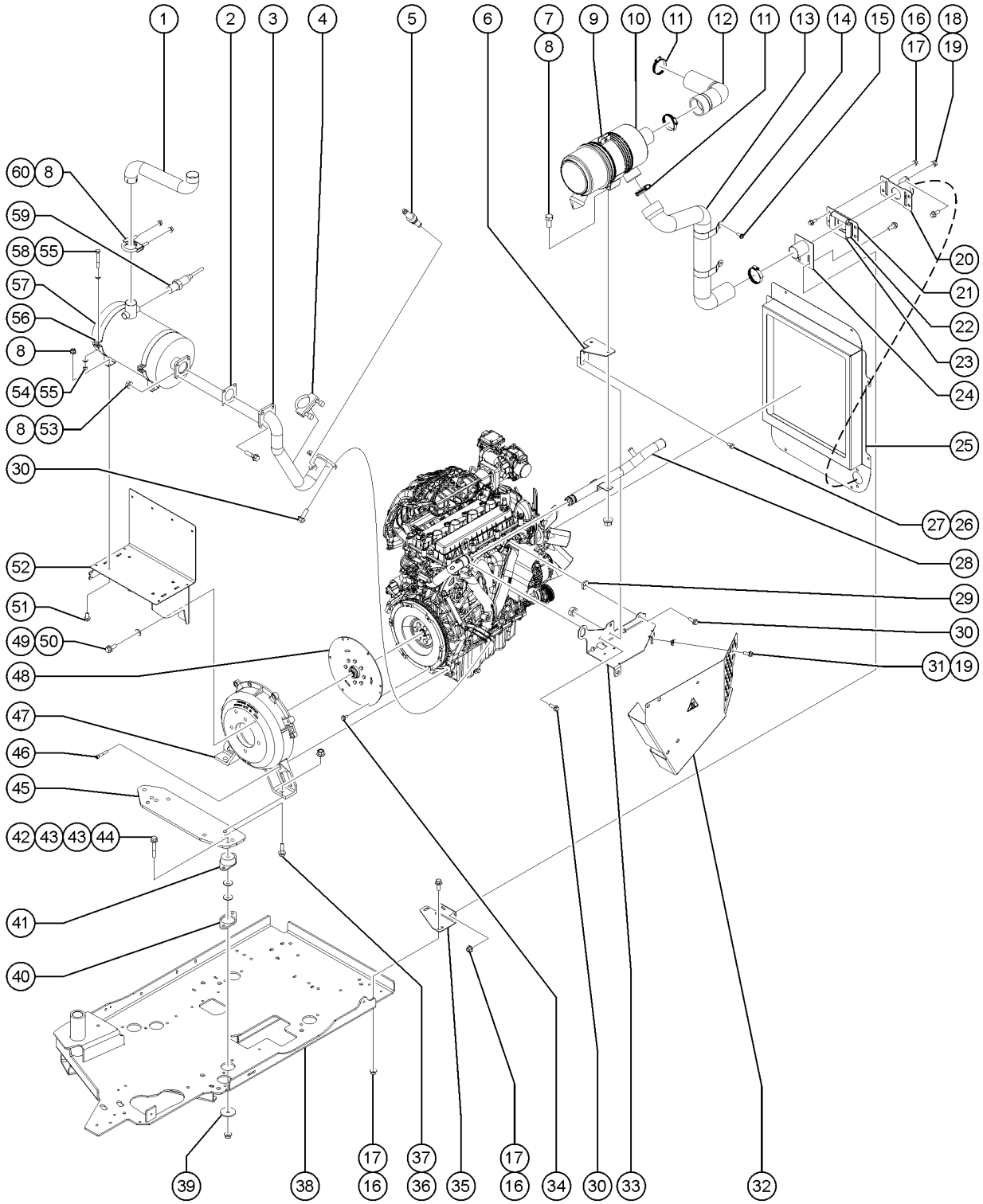

505.1 Ford MSG-425 EFI, View 3

Item	Part No.	Description	Qty.
52	160540GT	WELDMENT,CAT MOUNT,MSG425	1
53	824087GT	SCREW, HHF, 5/16-18 X 1.25, 8, ZAG	4
54	824025GT	NUT,TL,3/8-16,C,ZAG	2
55	824145GT	WASHER, FLAT, DIN125, M10, ZAB	4
56	119051GT	MOUNTING BAND,MUFFLER,8.0"	2
57	215528GT	WDMT, CAT. MUFFLER, MSG425	1
58	1256848GT	SCREW,HHC,3/8-16X2.75,8,ZAG	2
59	139610GT	SENSOR,AIR,CAT MONITOR	1
60	102121GT	CLAMP,MUFFLER,1-7/8 IN.	1

506.1 Ford MSG-425 EFI, View 4

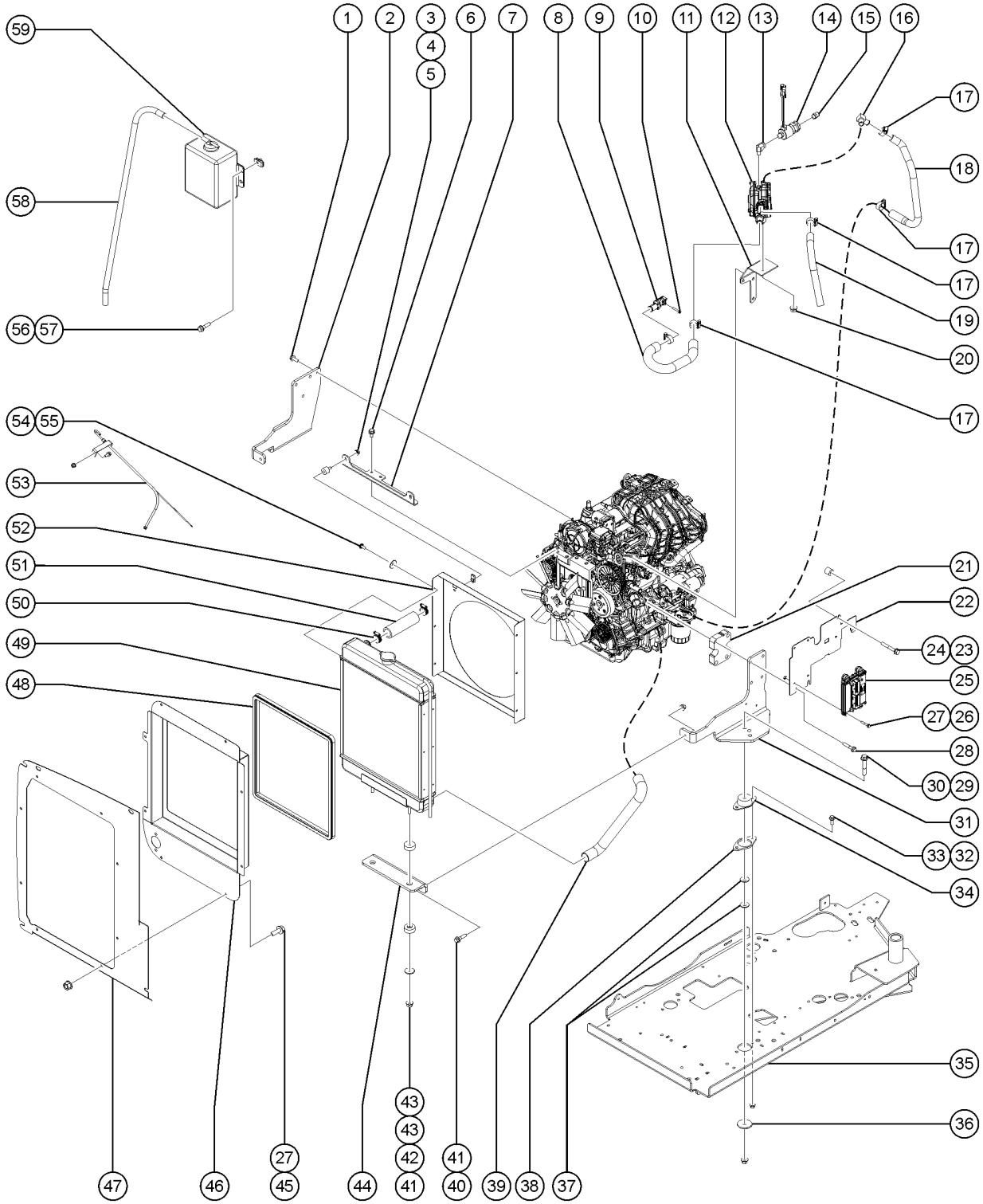

506.1 Ford MSG-425 EFI, View 4

Item	Part No.	Description	Qty.
A	236799GT	ENGINE KIT,FORD MSG425 gas/ LPS	1
1	232874GT	SCREW,HHF,M10-1.5X30,DIN6921,10.9,ZAB	4
2	236421GT	ENGINE MOUNT, RIGHT, MSG425	1
3	1257628GT	NUT,SERRATED,3/8-16,ZAG	2
4	48498GT	ISOLATOR,AIR FILTER MOUNT	2
5	36456GT	SPRING CLIP,5/16-18,.025-.15X.	2
6	824134GT	SCREW,HHF,M12-1.75X30,DIN6921,10.9,ZAB LPS Only	2
6B	1251983GT	SCREW,HHF,M8-1.25X16,DIN6921,10.9,ZAB gas/ LPS	2
7	237780GT	FORMING, RAD SUPPORT, MSG425	1
8	102119GT	HOSE,3/4,LP LPS Only	1
9	215285GT	FITTING, DEPR LP, MSG425	1
10	215323GT	SHCS, M4-0.7X25MM, CL 2.9	4
11	236423GT	FORMING, LP REG MOUNT, MSG425	1
12	215284GT	REGULATOR,LP PRESSURE,MSG425	1
13	119824GT	ELBOW,90DEG,5502-04-04-B	1
14	119232GT	LOCKOFF,LP,FORD DSG/MSG	1
15	19358GT	CONNECTOR,010102-6-4 LPS Only	1
16	102074GT	ELBOW,90DEG, .63 HS X.375 MPT	1
17	46131GT	CLAMP,HOSE,.63" - 1.0" X .5" LPS Only	3
17B	46131GT	CLAMP,HOSE,.63" - 1.0" X .5" gas/ LPS	6
18	236340GT	HOSE, COOLANT, VAP, MSG425	1
19	1702GT	HOSE-HEATER,5/8 ID-BLACK	1
20	231513GT	NUT,TL FLG,M6-1.0,DIN6927,10,ZAB LPS Only	2
20B	237832GT	NUT,TL FLG,M8-1.25,DIN6927,10,ZAB gas/ LPS	2
21	110477GT	PLATE,ENGINE SUPPORT SPACER	1
22	236425GT	FORMING, ECU MOUNT, MSG425	1
23	1258771GT	SCREW,HHF,M8-1.25X60,DIN6921,10.9,ZAB	1
24	215421GT	SPACER, ECU, MSG425	1

506.1 Ford MSG-425 EFI, View 4

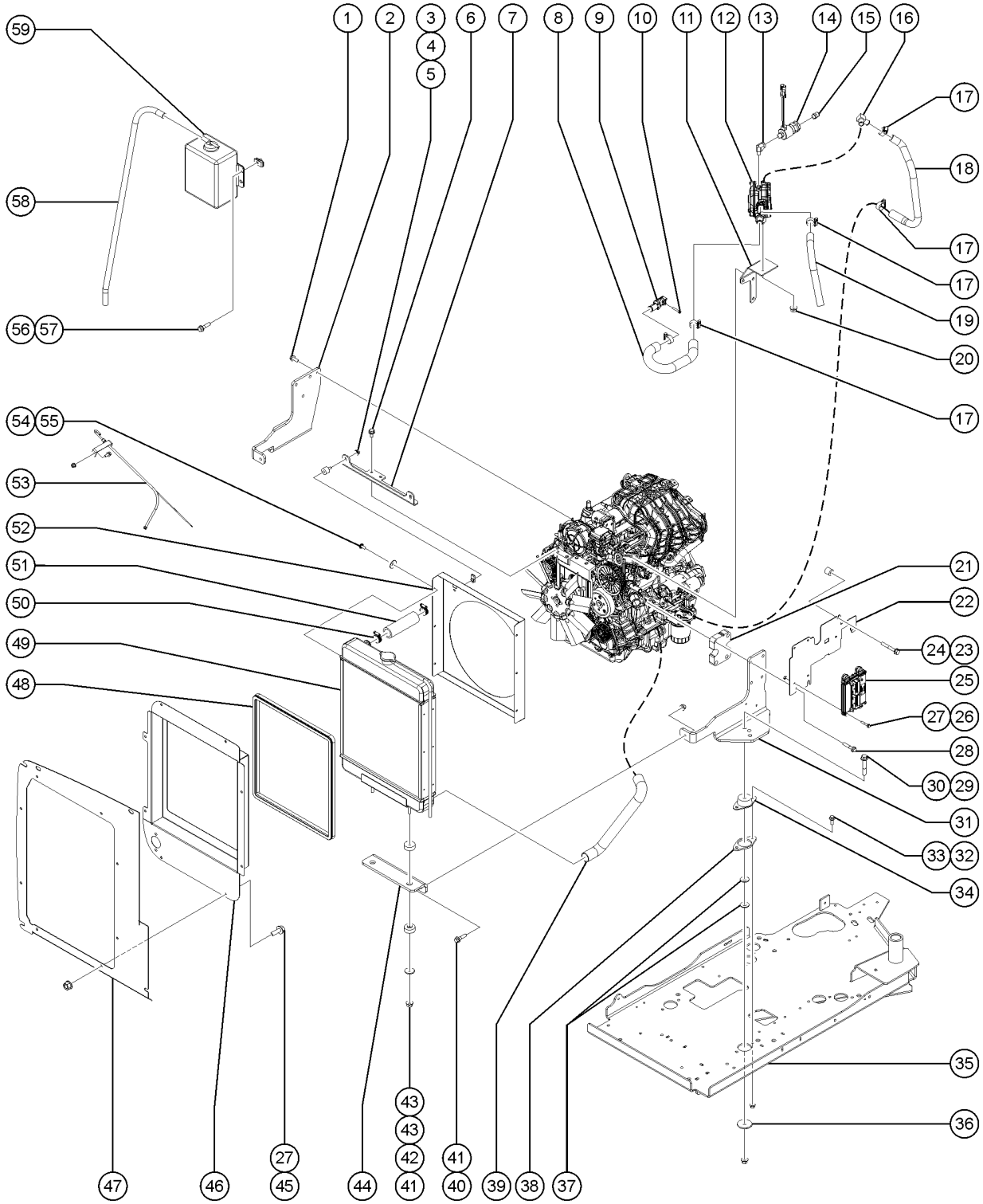

Item	Part No.	Description	Qty.
25	1294827GT	CONTROL MODULE, MSG425	1
26	824081GT	SCREW,HHF,1/4-20X1.5,8,ZAG	4
27	824027GT	NUT, TL FLG, 1/4-20, G, ZAG	12
28	1257486GT	SCREW,HHF,M10-1.5X55,DIN6921,10.9,ZAB	4
29	1295334GT	TERM QC TAB - #8 RING, .250, 45 DEG, BRASS	2
30	1274172GT	NUT,NYLOCK FLG,1/2-13,G,ZAG	2
31	236420GT	ENGINE MOUNT, LEFT, MSG425	1
32	824090GT	SCREW,HHF,3/8-16X1,8,ZAG	8
33	1274322GT	NUT,NYLOCK FLG,3/8-16,F,ZAG	8
34	70452GT	ISOLATOR,ENGINE VIBRATION***	2
35		REF. WELDMENT, ENGINE TRAY (refer to 528.1)	
36	1256283GT	WASHER,FLAT,.5X2.25X.188,ZAG	2
37	1255760GT	WASHER,FLAT,1/2,USS,ZAG	4
38	216167GT	SPACER,ISOLATOR,MSG425 LPS only	2
39	236339GT	HOSE, LOWER RADIATOR, MSG425	1
40	824092GT	SCREW,HHF,3/8-16X1.5,8,ZAG	2
41	824029GT	NUT, TL FLG, 3/8-16, G, ZAG	4
42	824120GT	WASHER,FLAT,.375X1.50X.125,ZAG	2
43	24038GT	SHOCK MOUNT,SMALL	4
44	110417GT	FORMING,RADIATOR SUPPORT**	1
45	1256855GT	SCREW,HHF,1/4-20X.625,8,ZAG	8
46	822698GT	SHROUD, RADIATOR, FORD MSG425	1
47	822695GT	BAFFLE, AIR INTAKE, S60	1
48	1257424GT	TRIM SEAL,RADIATOR,DEUTZ D2.9	1
49	110406GT	RADIATOR,FORD DSG423 & MSG425	1
49-	21465GT	CLAMP,HOSE,.25" - .63" X .3125	1
50	36208GT	CLAMP,HOSE,1.25***	2
51	236338GT	HOSE, UPPER RADIATOR, MSG425	1

506.1 Ford MSG-425 EFI, View 4

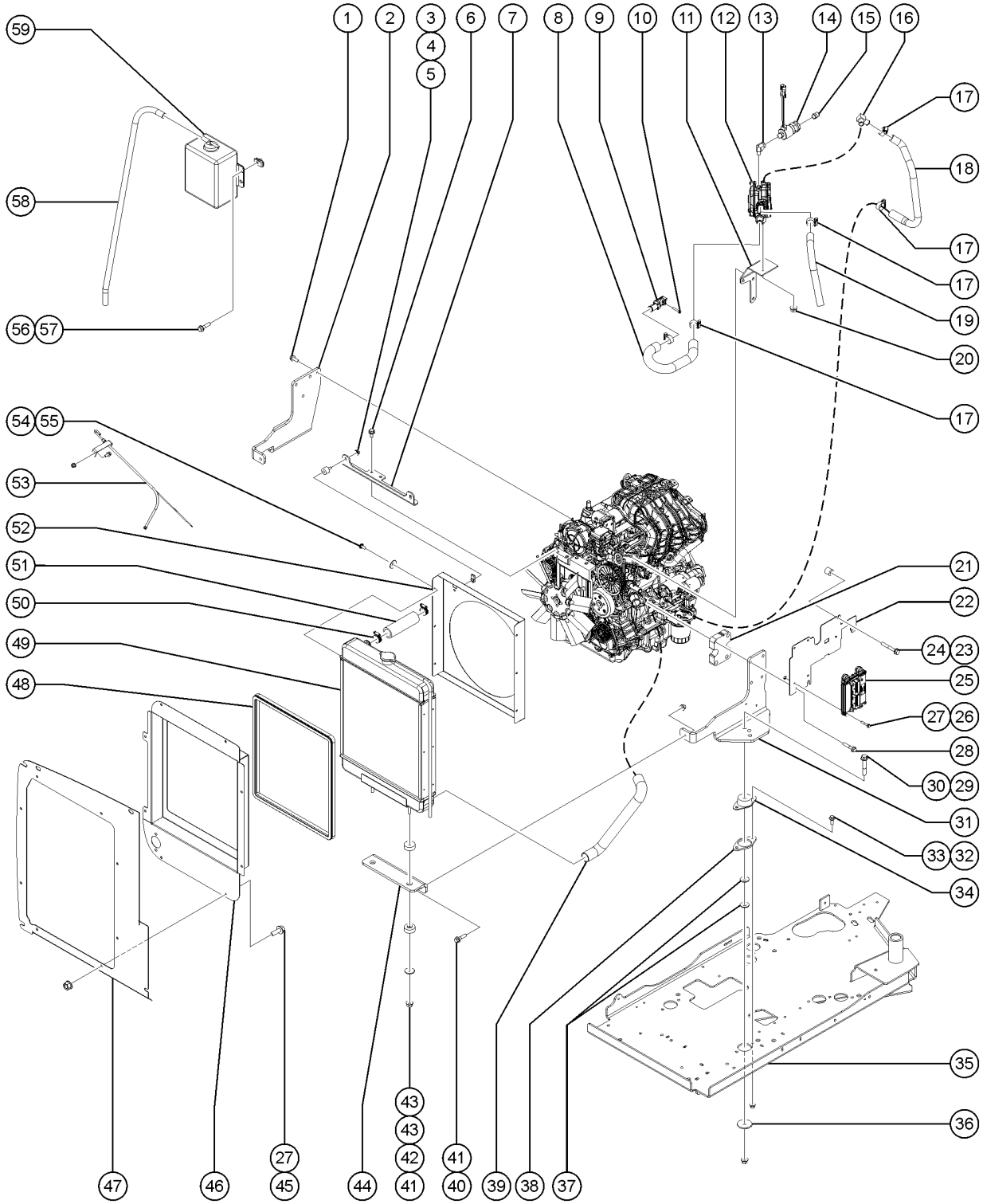

506.1 Ford MSG-425 EFI, View 4

Item	Part No.	Description	Qty.
52	236364GT	FAN SHROUD, MSG425	1
53	220229GT	KIT, DIPSTICK, MSG425	1
53-	238359GT	WDMT,DIPSTICK TUBE,MSG425	
53-	220230GT	DIPSTICK, MSG425	
53-	824028GT	NUT, TL FLG, 5/16-18, G, ZAG	
53-	824085GT	SCREW, HHF, 5/16-18 X .75, 8, ZAG	
54	824220GT	SCREW,PHPM SEMS ET,10-24X.5,ZA	4
55	1253185GT	WASHER,FLAT,#10,USS,ZAG	
56	824078GT	SCREW,HHF,1/4-20X.75,8,ZAG	4
57	56912GT	SPRING CLIP,1/4-20,.025-.15X.54,ZAG	4
58	1259663GT	HOSE,OVERFLOW,FORD MSG425	1
59	70367GT	BOTTLE,COOLANT RECOVERY,3.7*** (includes cap)	1
59-	106226GT	TUBING,VINYL,1/2" CLEAR	
59-	21465GT	CLAMP,HOSE,.25" - .63" X .3125 (not shown) not included with 70367, must order seperately	
59-	6833GT	CLAMP,0.50,#8 X 1/4,RUB CUSH (not shown) not included with 70367, must order seperately	
59-	72327GT	CAP, COOLANT RET SYS(54071) CAP, COOLANT RET SYS(54071)	

507.1 Deutz TD2011L04i, View 1

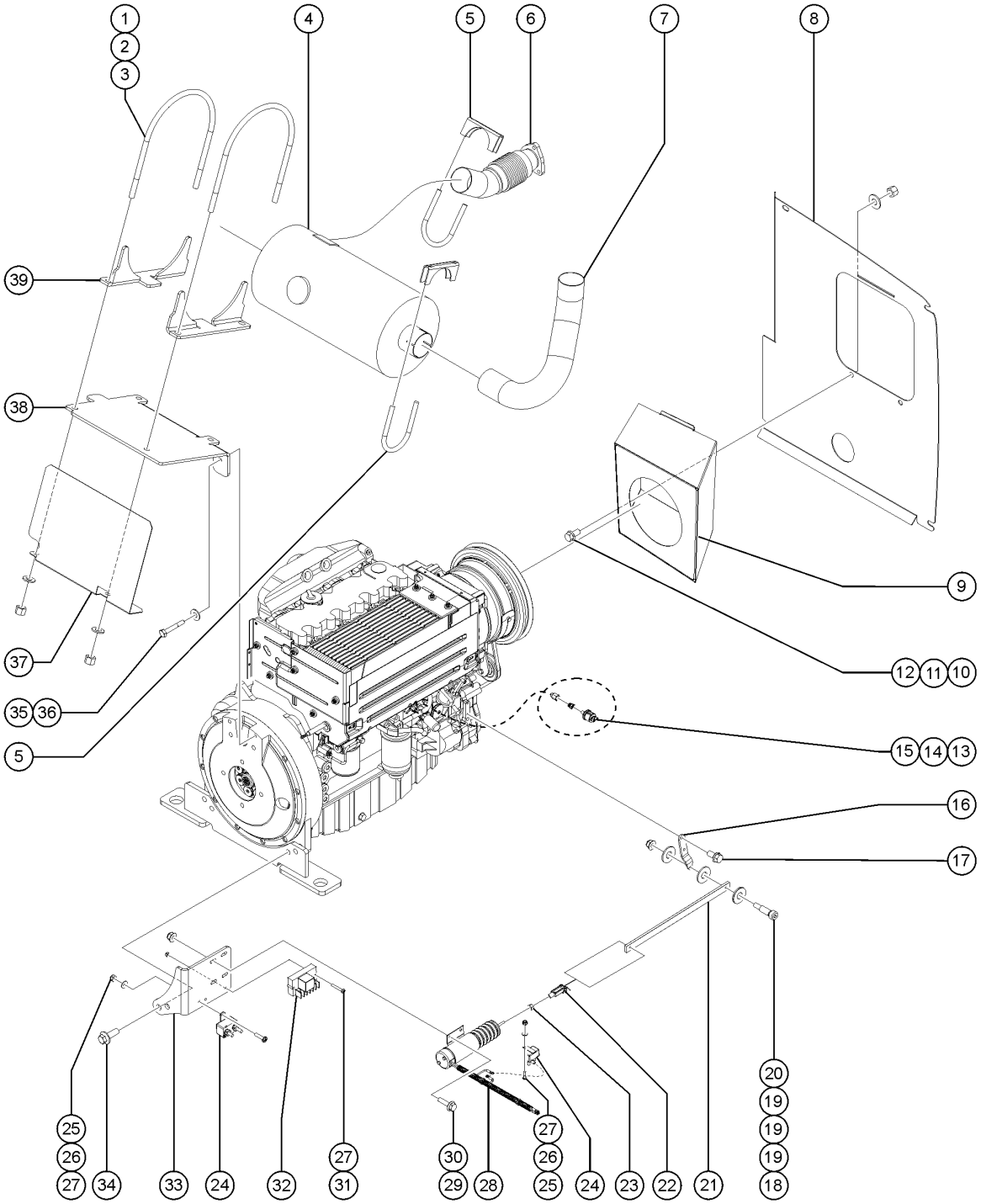

507.1 Deutz TD2011L04i, View 1

Item	Part No.	Description	Qty.
A		Ref. ENGINE,DEUTZ, TD2011L04i TPEM	
1	70449GT	U-BOLT,1/2-13 X 8.5	2
2	825353GT	WASHER,FLAT,1/2,SAE,HRD,ZAG	4
3	1274320GT	NUT,NYLOCK,1/2-13,C,ZAG	4
4	70444GT	MUFFLER,2.5"INLET/OUTLET	1
5	71911GT	CLAMP,MUFFLER, 2.50 INCH	2
6	70445GT	FLEX PIPE,EXHAUST,2.5" DIA	1
7	822514GT	TAILPIPE, DEUTZ,TPEM & ROW	1
8	110183GT	BAFFLE,AIR INTAKE S60***	1
9	128896GT	WELDMENT, AIR INTAKE BOX	1
10	824089GT	SCREW, HHF, 3/8-16 X .75, 8, ZAG	2
11	1255758GT	WASHER,FLAT,3/8,USS,ZAG	2
12	824025GT	NUT,TL,3/8-16,C,ZAG	2
13	30810GT	SENDING UNIT,OIL PRESSURE***	1
14	106033GT	ADAPTER,NPT 6-4	1
15	106034GT	ADAPTER,M18	1
16	50787GT	LEVER,GOVERNOR ACTUATOR**	1
17	237238GT	SCREW,HHF,M6-1.0X12,DIN6921,10	2
18	1257076GT	BOLT,SHS,1/4-28X4,ZAG	1
19	824113GT	WASHER,FLAT,USS,1/4,ZAG	3
20	1283004GT	NUT,NYLOCK FLG,10-24,A,ZAG	1
21	139322GT	THROTTLE LINKAGE, DSL	1
22	21130GT	CLEVIS YOKE-1/4-28,PLTD W/PIN	1
23	824041GT	NUT, 1/4-28, 8, ZAG	1
24	128829GT	CIRCUIT BRKR 15A TYPE 2 METAL	2
25	49816GT	SCREW,PHILLIPS,PHM,10-32 X .75	2
26	6146GT	WASHER,FLAT,MS,#10,Y	2
27	6178GT	NUT, NYLOCK, 10-32	4

507.1 Deutz TD2011L04i, View 1

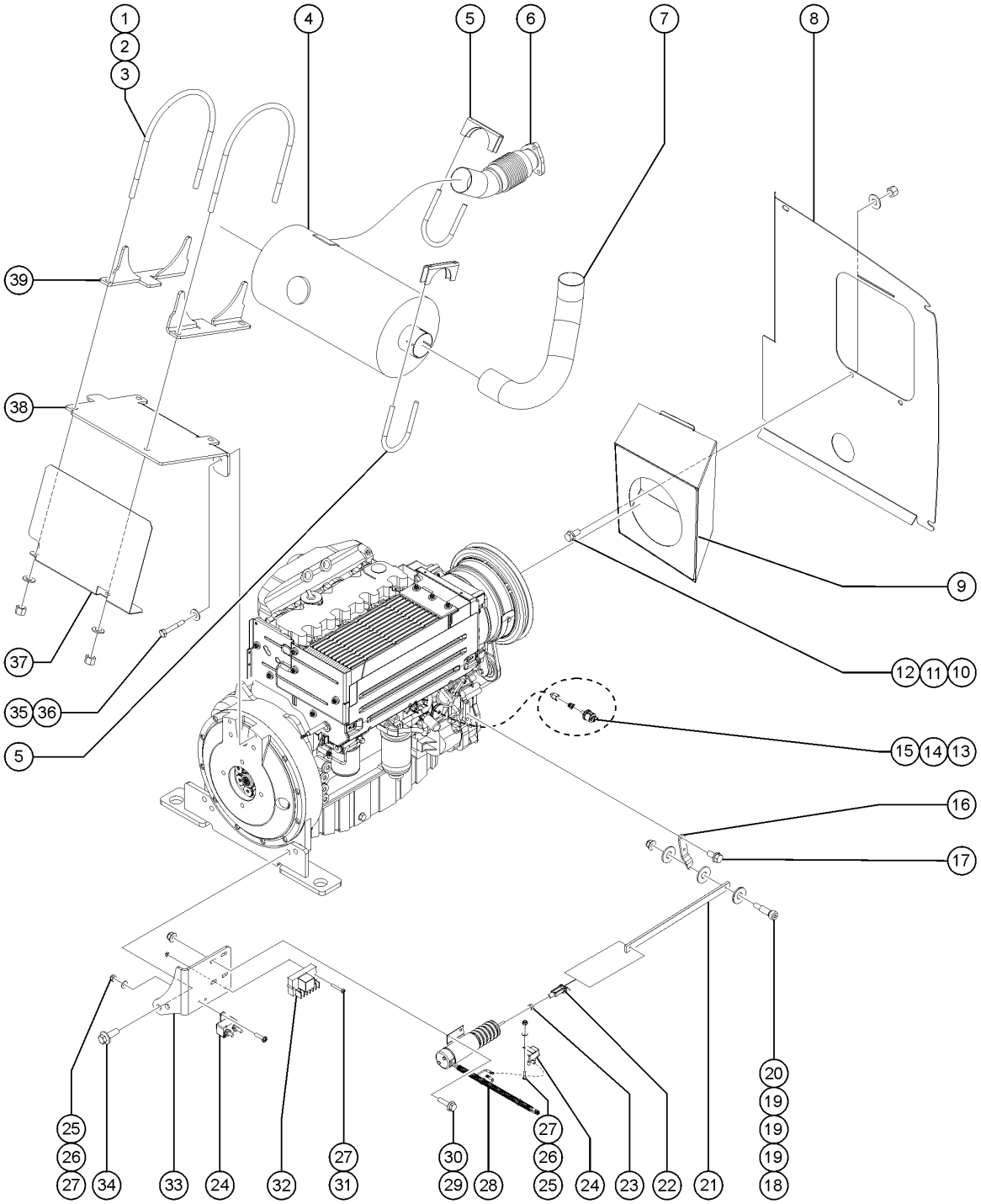

507.1 Deutz TD2011L04i, View 1

Item	Part No.	Description	Qty.
28	121615GT	THROTTLE SOLENOID ASSY, TROMB.	
28-	89998GT	KIT,SERVICE,SOLENOID MODULE	1
29	824078GT	SCREW,HHF,1/4-20X.75,8,ZAG	4
30	1277924GT	NUT,NYLOCK FLG,1/4-20,F,ZAG	4
31	49817GT	SCREW,PHILLIPS,PHM,10-32 X1.25	2
32	89997GT	RELAY MODULE(89996,89998)	1
33	139321GT	FORMING, SOLENOID MOUNT***	1
34	1251899GT	SCREW,HHF,M14-2.0 X 40,DIN 6921,10.9, ZAB	2
35	1257706GT	SCREW,HHC,M10-1.5X70,DIN931,10	2
36	824145GT	WASHER, FLAT, DIN125, M10, ZAB	2
37	102237PGT	FORMING,HEAT SHIELD,MUFFLER	1
38	70448GT	FORMING,MUFFLER MOUNT***	1
39	70483GT	FORMING,8.5' MUFFLER MOUNT	2

508.1 Deutz TD2011L04i, View 2

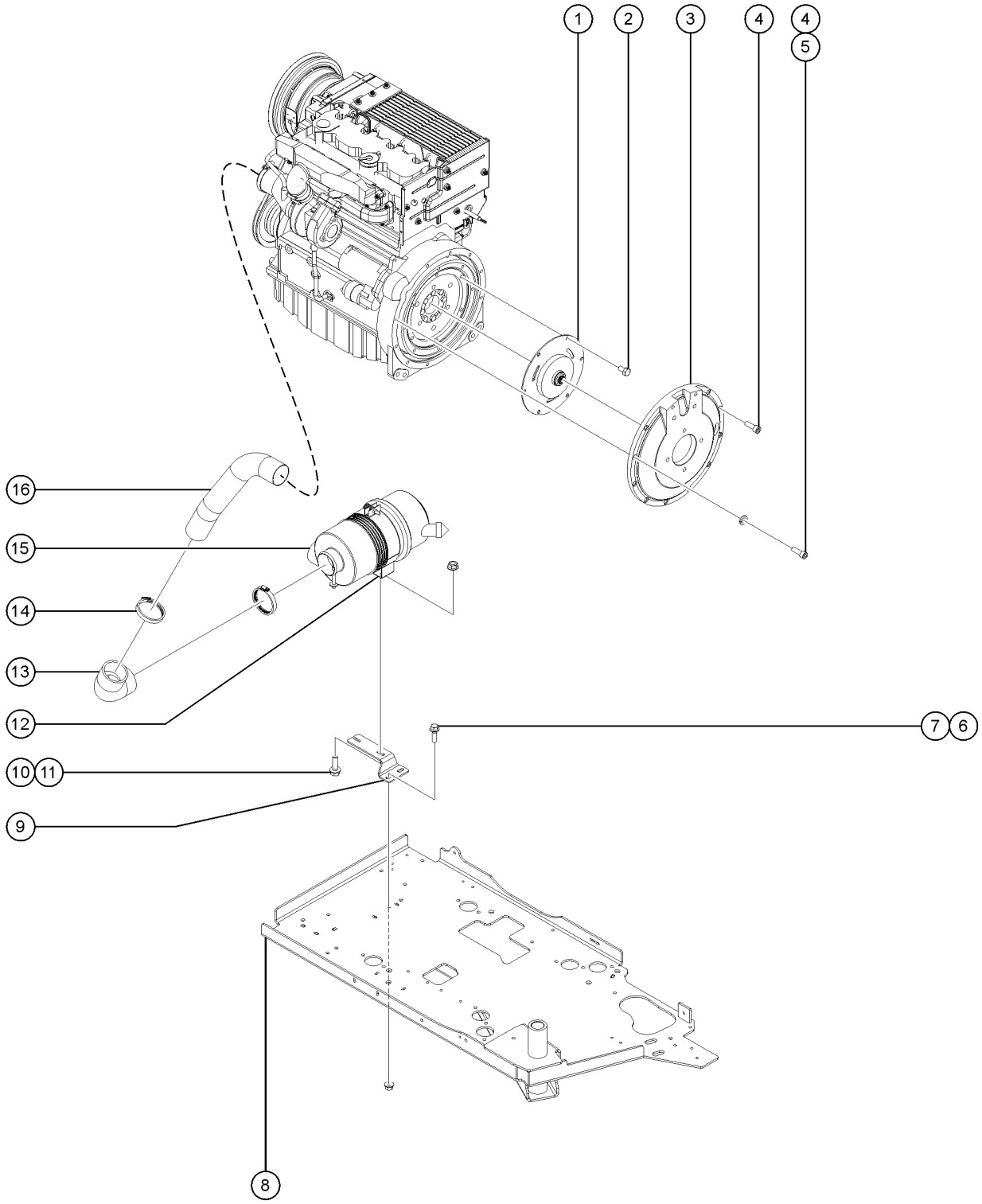

508.1 Deutz TD2011L04i, View 2

Item	Part No.	Description	Qty.
1	128004GT	COUPLER,15 TOOTH,FBA,SAE8***	1
2	825351GT	SCREW,HHC,M10-1.5X20,DIN933,10.9,ZAB	6
3	70381GT	COVER,FLYWHEEL CASTING	1
4	1255666GT	SCREW,SHC,M10-1.50X30,DIN912,1	9
5	824142GT	WASHER, LOCK, M10, ZAB	1
6	824091GT	SCREW, HHF, 3/8-16 X 1.25, 8, ZAG	2
7	824029GT	NUT, TL FLG, 3/8-16, G, ZAG	2
8		REF. WELDMENT, ENGINE TRAY (Refer to 528.1)	
9	102209GT	FORMING,AIR CLEANER MOUNT**	1
10	824086GT	SCREW,HHF,5/16-18X1,8,ZAG	2
11	1255805GT	NUT,SERRATED,5/16-18,8,ZAG	2
12	81468GT	MOUNTING BAND,AIR CLEANER	1
13	139455GT	ELBOW,AIR INTAKE,RUBBER	1
14	30489GT	CLAMP,HOSE,3.50	2
15	81467GT	AIR CLEANER,NELSON	1
15-	52866GT	EVACUATOR VALVE-AIR CLEANER (for 81467)	
15-	62425GT	FILTER,AIR CLEANER, SUPERBOOM (for 81467)	
15-	75450GT	AIR CLEANER CLIPS, SUPERBOOM (for 81467)	
15-	75451GT	AIR CLEANER COVER, SUPERBOOM* (for 81467)	
16	102227GT	TUBE,AIR INTAKE	1

509.1 Deutz TD2011L04i, View 3

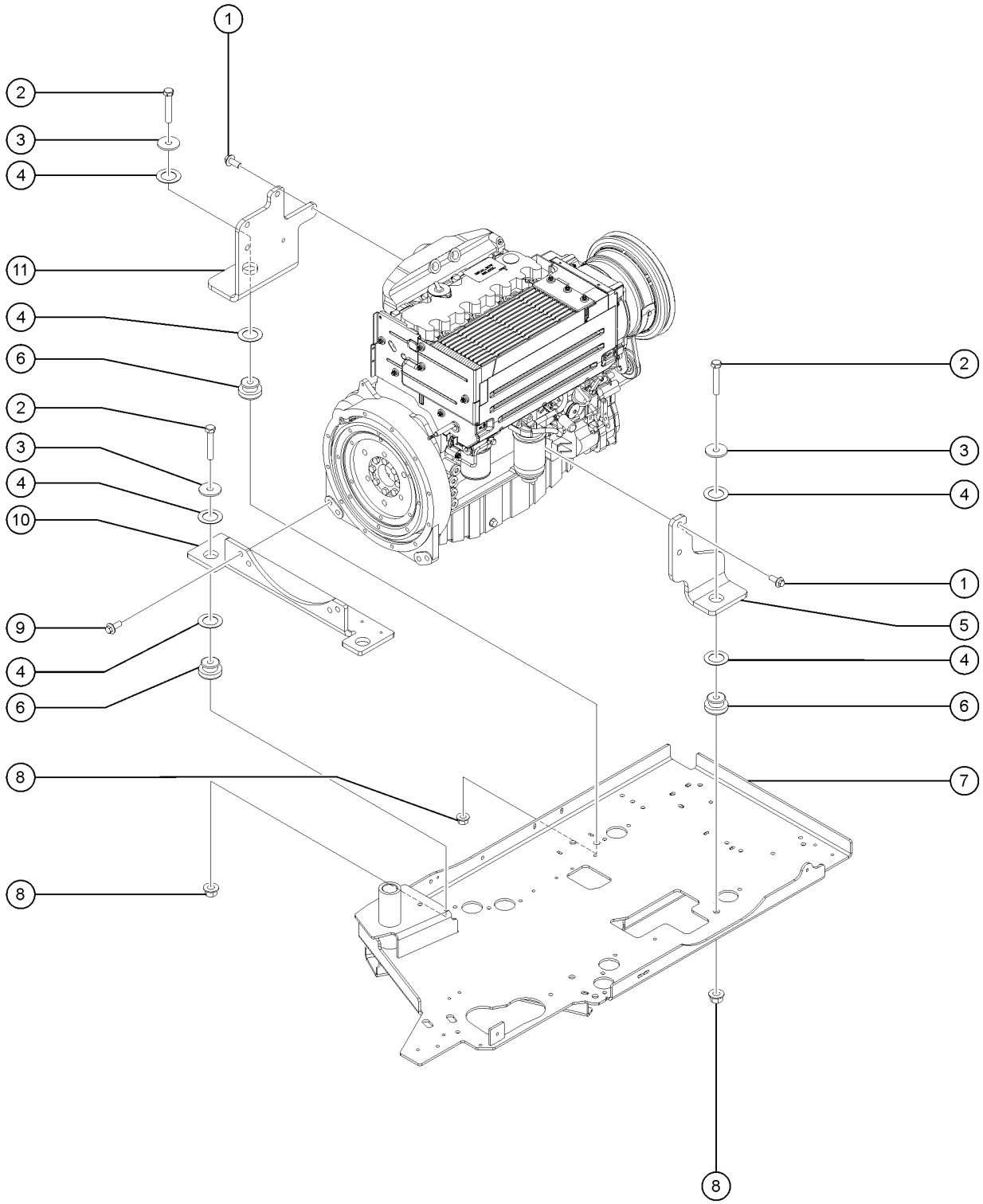

509.1 Deutz TD2011L04i, View 3

Item	Part No.	Description	Qty.
1	1256776GT	SCREW,HHF,M14-2.0X35,DIN6921,10.9,ZAB	5
2	1256169GT	SCREW,HHC,5/8-11X3.5,8,ZAG	4
3	824123GT	WASHER,FLAT,.625X2.25X.188,ZAG	4
4	824151GT	WASHER,SHIM,1.270X2.130X.062,Z	8
5	70455GT	FORMING,ENGINE MOUNT	1
6	102045GT	ISOLATOR,ENGINE VIBRATION	4
7		REF. WELDMENT, ENGINE TRAY (refer to 528.1)	1
8	1283007GT	NUT,NYLOCK FLG,5/8-11,F,ZAG	4
9	1251899GT	SCREW,HHF,M14-2.0 X 40,DIN 6921,10.9, ZAB	4
10	160517GT	FORMING,ENGINE MOUNT,DEUTZ	1
11	70454GT	FORMING,ENGINE MOUNT	1

510.1 Deutz TD2011L04i, View 4

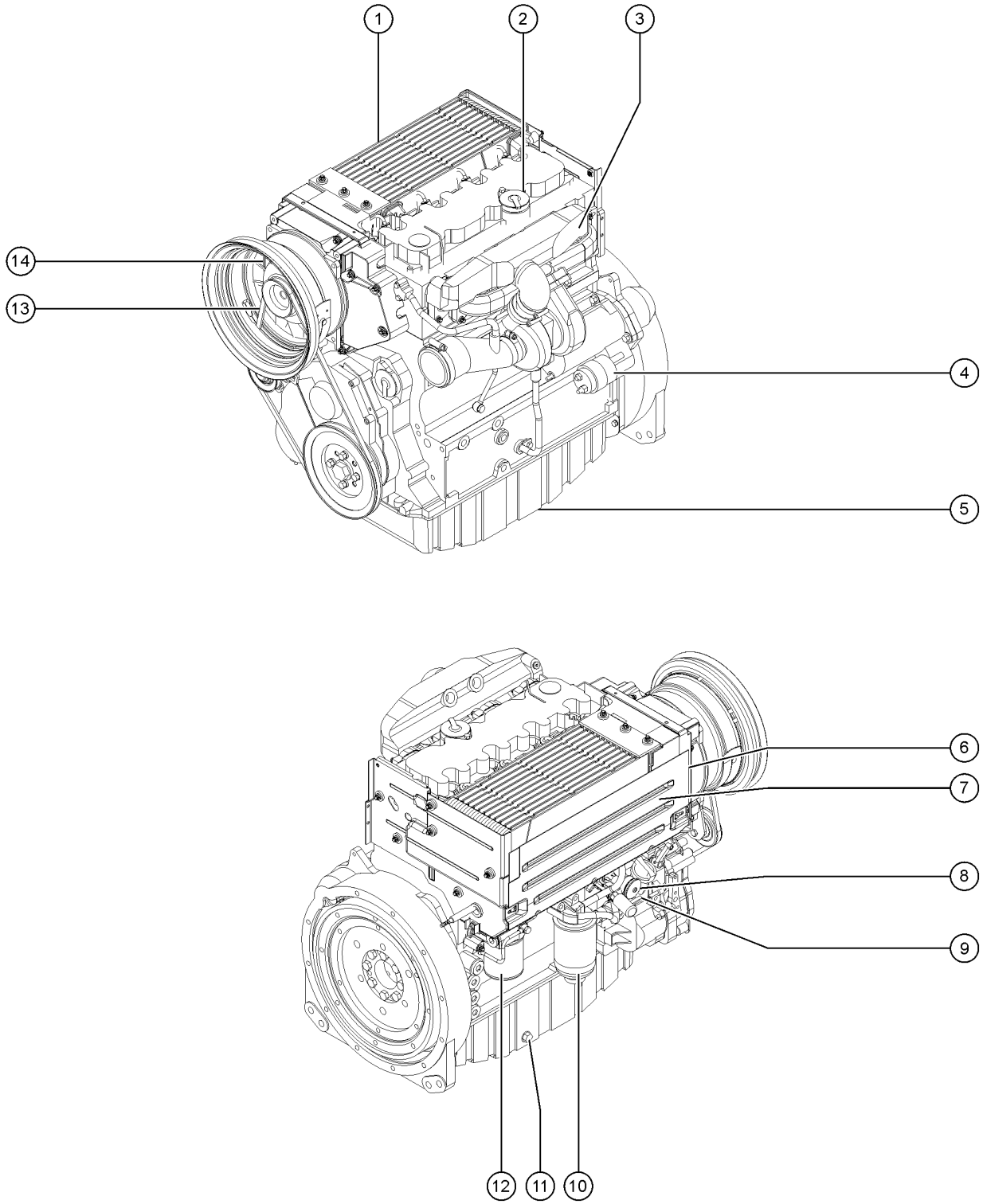

510.1 Deutz TD2011L04i, View 4

Item	Part No.	Description	Qty.
1		Ref. ENGINE,DEUTZ, TD2011L04i TPEM	1
2	29557GT	CAP,OIL FILLER,DEUTZ,DIESEL***	1
3	102590GT	EXHAUST MANIFOLD, DEUTZ F4L201	1
3-	29559GT	GASKET,EXHAUST	
4	49915GT	SOLENOID-STARTR DEUTZF4L1011F*	1
5	102586GT	OIL PAN,DEUTZ F4L2011	1
6	1289103GT	COVER,ENGINE,TD2011 L04I	1
7	111445GT	SENDING UNIT,OIL TEMP SWCH,DTZ	1
8	30810GT	SENDING UNIT,OIL PRESSURE***	
8-	106033GT	ADAPTER,NPT 6-4	
8-	106034GT	ADAPTER,M18	
9	52352GT	DIPSTICK-F3L1011F (DEUTZ)	
10	29560GT	FILTER,FUEL/WTR SEP, DTZ 1008 Genie Genuine Part. See PN 1254826 for compatible aftermarket replacement.	1
10-	58566GT	FILTER HEAD (29560)	
10B	1254826GT	FUEL FILTER W/SEP,DEUTZ,1008 Genie Aftermarket Part.	1
11	102587GT	PLUG,ENGINE OIL,DEUTZ F4L2011	
12	49924GT	FILTER,OIL,DEUTZ F4L1011F Genie Genuine Part. See PN 1255653 for compatible aftermarket replacement.	
12B	1255653GT	FILTER,OIL,DEUTZ,REPLACEMENT Genie Aftermarket Part. Compatible with Genie Genuine Part 49924.	
13	58630GT	V-BELT, DEUTZ TD2011LOAI	
14	58249GT	ALTERNATOR, DEUTZ,BF4L2011***	

511.1 Deutz D2.9L4, View 1

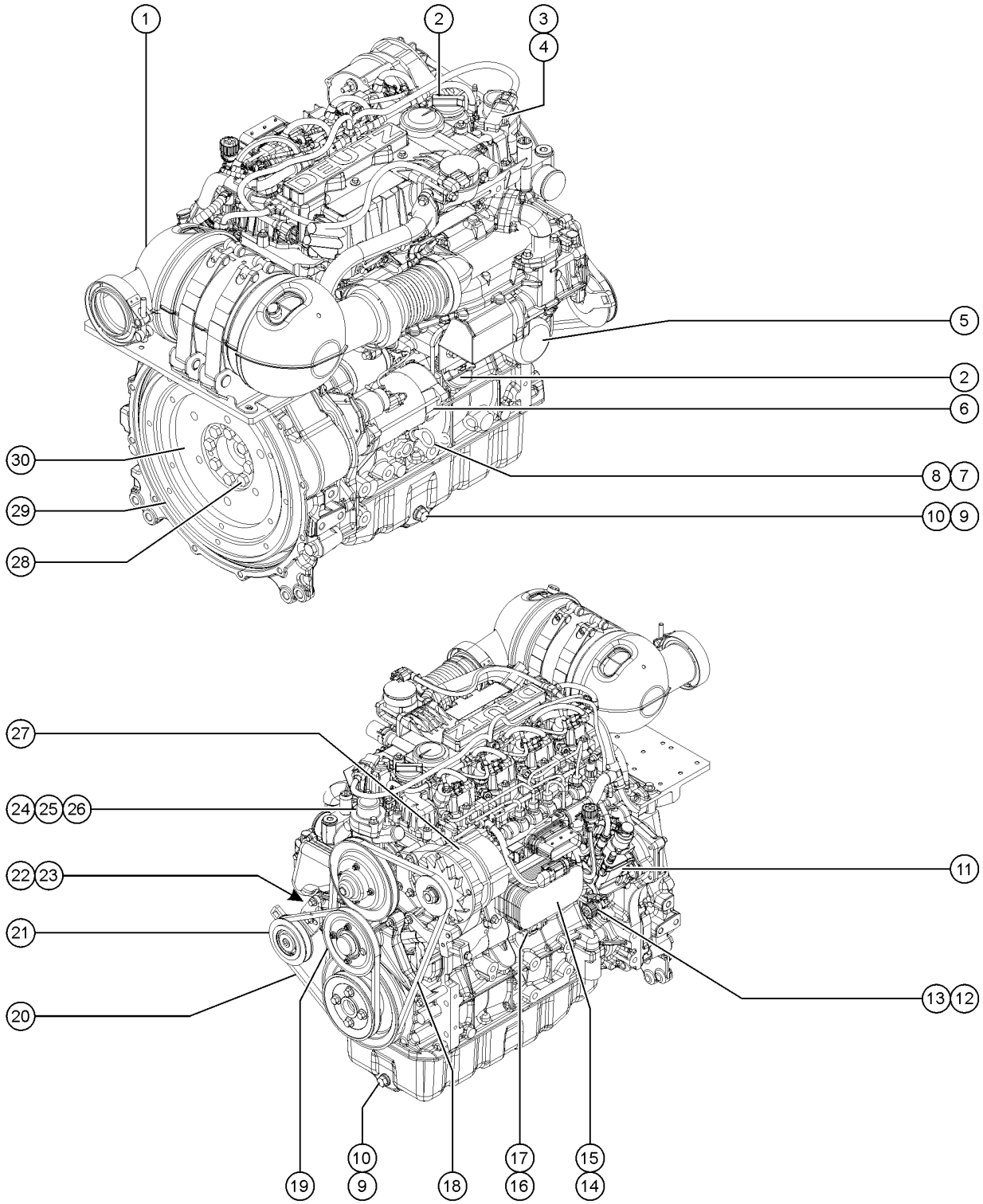

511.1 Deutz D2.9L4, View 1

Item	Part No.	Description	Qty.
A	1262870GT	GLOW PLUG, DEUTZ	4
B	1262871GT	SEAL, FRONT ENGINE,DEUTZ	1
C	1262872GT	SEAL, REAR ENGINE,DEUTZ	1
D	1272624GT	KIT,WATER PUMP 2.9 L4 includes fasteners and 1262874 pump	1
E	1289895GT	WASHER,WATER PUMP (1272624) for 1272624	
F	1262875GT	O-RING, WATER PUMP	1
F-	1259654GT	INTAKE BREATHER	1
G	1259899GT	HARNESS, ENGINE, DEUTZ TD2.9	1
H	1277974GT	PINS,CONNECTOR,INJ HARNESS,D2.9	
1		OXIDATION CATALYST,DEUTZ (DEUTZ OXIDATION CATALYST/MUFFLER)(contact Genie Parts; engine serial number required)	1
2	29557GT	CAP,OIL FILLER,DEUTZ,DIESEL***	2
3	1262896GT	SENSOR,INTAKE AIR PRESSURE	1
4	1262897GT	O-RING, INTAKE AIR PRESSURE SENSOR	1
5	49924GT	FILTER,OIL,DEUTZ F4L1011F Genie Genuine Part. See PN 1255653 for compatible aftermarket replacement.	1
5B	1255653GT	FILTER,OIL,DEUTZ,REPLACEMENT Genie Aftermarket Part. Compatible with Genie Genuine Part 49924.	
6	1254594GT	STARTER,3.2KW,DEUTZ D2.9	1
6-	1262868GT	BOLT, DEUTZ STARTER not included sold seperately	
6B	825939GT	FORMING, CLAMP, BATTERY CABLE	
6B-	78736GT	CLAMP,2 HOSE,PLASTIC,5/8 for 825939	
7	825708GT	DIPSTICK,TD2.9	1
8	1262881GT	ORING, OIL DIP STICK	1
9	102587GT	PLUG,ENGINE OIL,DEUTZ F4L2011	2
10	108538GT	RING / SEALING	2
11	1279653GT	PUMP,FUEL,HI PRESS,DEUTZ TD2.9	1
12	1262894GT	SENSOR,CAM/CRANKSHAFT POSITION (crankshaft)	1
13	1262895GT	O-RING, CRANKSHAFT POSITION SENSOR	1
14	1260357GT	OIL COOLER,TD2.9	1
15	1262883GT	GASKET, OIL COOLER, DEUTZ	1

511.1 Deutz D2.9L4, View 1

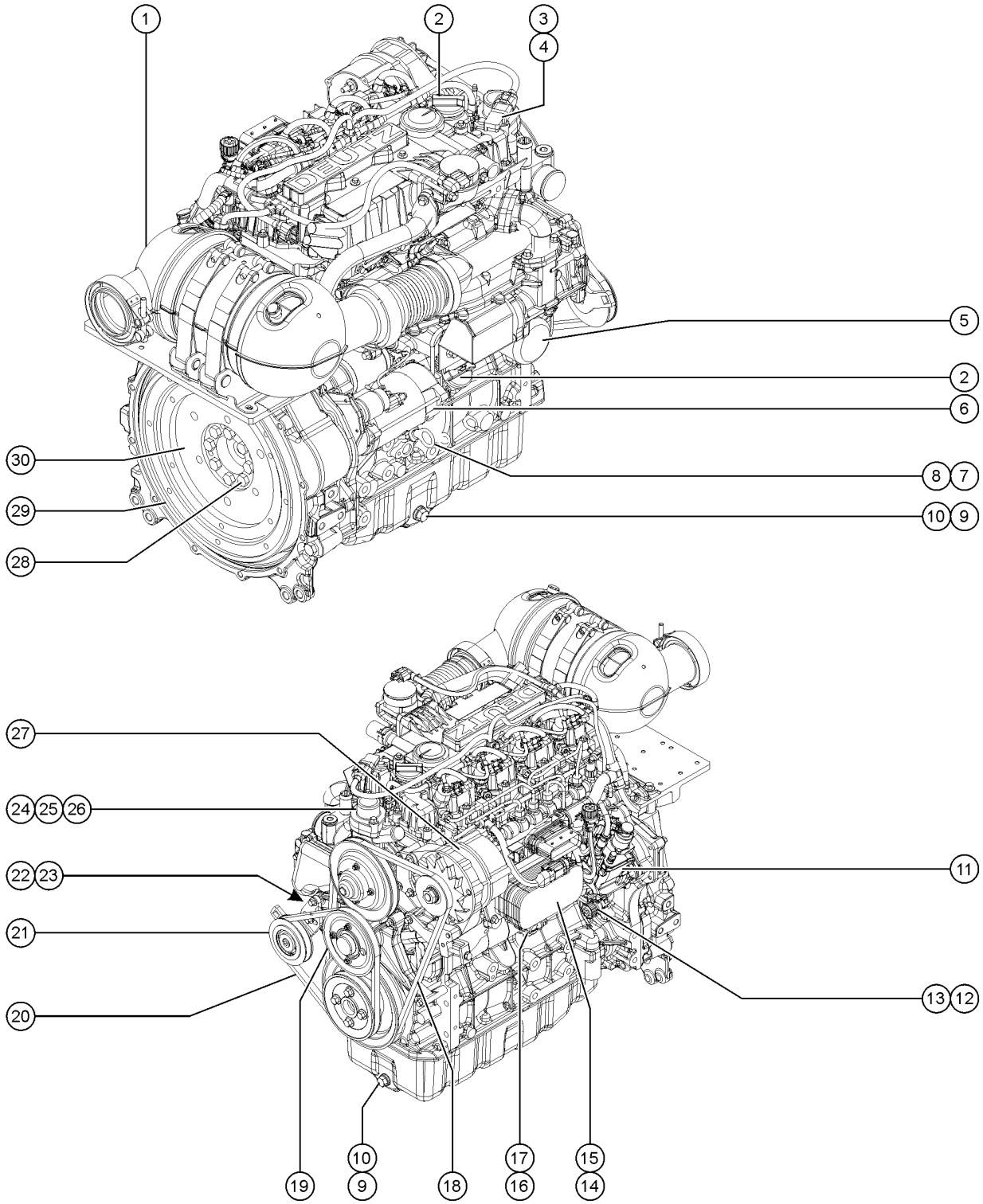

511.1 Deutz D2.9L4, View 1

Item	Part No.	Description	Qty.
16	824673GT	SENSOR,LOW PRESSURE,DEUTZ 2.9L (oil pressure sensor)	1
17	1262893GT	O-RING, OIL PRESSURE SENSOR	1
18	1262866GT	FAN BELT, ALTERNATOR	1
19	236248GT	PULLEY ASSEMBLY,ALTERNATOR,TCD	1
20	1262867GT	V-BELT, DEUTZ	1
21	1279631GT	PULLEY,BELT TENSIONER,D2.9L4	1
22	1262894GT	SENSOR,CAM/CRANKSHAFT POSITION hidden from view (camshaft)	1
23	1262899GT	O-RING, CAMSHAFT POSITION SENSOR hidden from view	1
24	1262877GT	THERMOSTAT HOUSING	1
25	1262876GT	THERMOSTAT,DEUTZ	1
26	1262878GT	GASKET, THERMOSTAT HOUSING	1
27	236251GT	ALTERNATOR,95 AMP,DEUTZ TCD3.6	1
28	1262873GT	BOLT, DEUTZ FLYWHEEL	8
29	89785GT	RING GEAR,DEUTZ F3L2011F	1
30	1259660GT	FLYWHEEL, SAE 8/10 order with item #28, PN 1262873, qty 8	1

512.1 Deutz D2.9L4, View 2

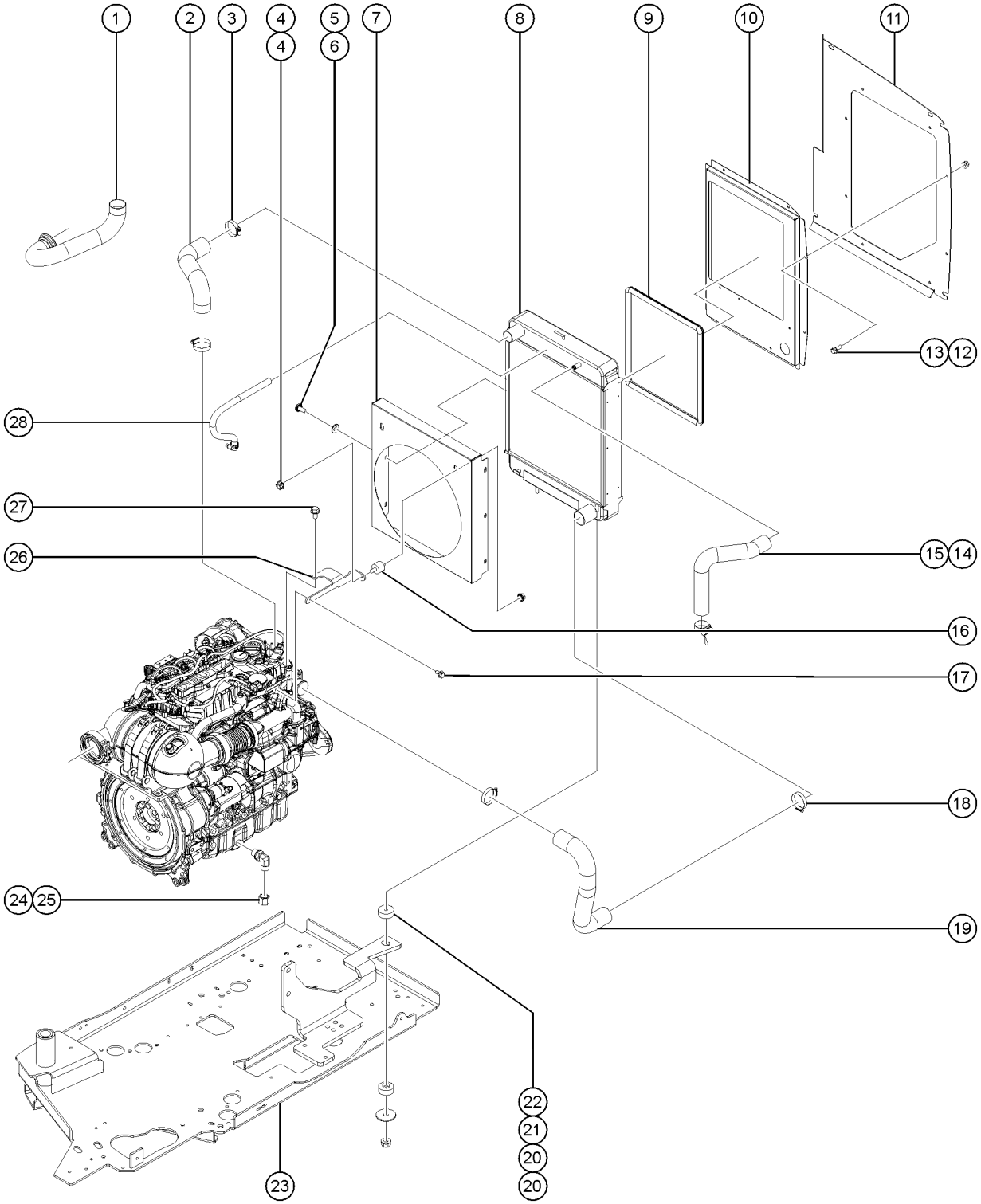

512.1 Deutz D2.9L4, View 2

Item	Part No.	Description	Qty.
1	822694GT	WDMT,TAILPIPE,DEUTZ D2.9 T4	1
2	237193GT	HOSE,UPPER RADIATOR,DEUTZ D2.9 to SN S65XCH-48759	1
2B	1264348GT	HOSE,UPPER RADIATOR W/INTEGRATED TANK,DEUTZ D2.9 (from SN S65XCH-48760), (to SN S65XCH-49329)	1
2C	237193GT	HOSE,UPPER RADIATOR,DEUTZ D2.9 from SN S65XCH-49330	1
3	22672GT	CLAMP,HOSE,1.75	2
4	1256679GT	NUT,SERRATED,1/4-20,8,ZAG	2
5	824220GT	SCREW,PHPM SEMS ET,10-24X.5,ZA	6
6	1253185GT	WASHER,FLAT,#10,USS,ZAG	6
7	237192GT	FAN SHROUD,DEUTZ D2.9 to SN S65XCH-48759	1
7B	1262324GT	SHROUD, FAN, DEUTZ 2.9L (from SN S65XCH-48760), (to SN S65XCH-49329)	1
7C	237192GT	FAN SHROUD,DEUTZ D2.9 from SN S65XCH-49330	1
8	214685GT	RADIATOR, CAPLESS, DEUTZ D 2.9 to SN S65XCH-48759	1
8B	1305983GT	RADIATOR/EXPANSION TANK,DEUTZ (from SN S65XCH-48760), (to SN S65XCH-49329)	1
8C	214685GT	RADIATOR, CAPLESS, DEUTZ D 2.9 from SN S65XCH-49330	1
9	1257424GT	TRIM SEAL,RADIATOR,DEUTZ D2.9 to SN S65XCH-48759	1
9B	1313470GT	TRIM SEAL,RADIATOR,DEUTZ D2.9 (from SN S65XCH-48760), (to SN S65XCH-49329)	1
9C	1257424GT	TRIM SEAL,RADIATOR,DEUTZ D2.9 from SN S65XCH-49330	1
10	822696GT	SHROUD, RADIATOR, DEUTZ 2.9	1
11	822695GT	BAFFLE, AIR INTAKE, S60	1
12	824078GT	SCREW,HHF,1/4-20X.75,8,ZAG	8
13	824027GT	NUT, TL FLG, 1/4-20, G, ZAG	8
14	1265738GT	HOSE EXPANSION TNK, D2.9 (from SN S65XCH-48760), (to SN S65XCH-49329)	1
15	30348GT	CLAMP,HOSE,1.00 to SN S65XCH-49329	1
16	219437GT	ISOLATOR,VIBRATION	1
17	237238GT	SCREW,HHF,M6-1.0X12,DIN6921,10	1
18	35434GT	CLAMP,HOSE,2.00*** from SN S65XCH-48760	1
19	237194GT	HOSE,LOWER RADIATOR,DEUTZ D2.9	1
20	24038GT	SHOCK MOUNT,SMALL	4

512.1 Deutz D2.9L4, View 2

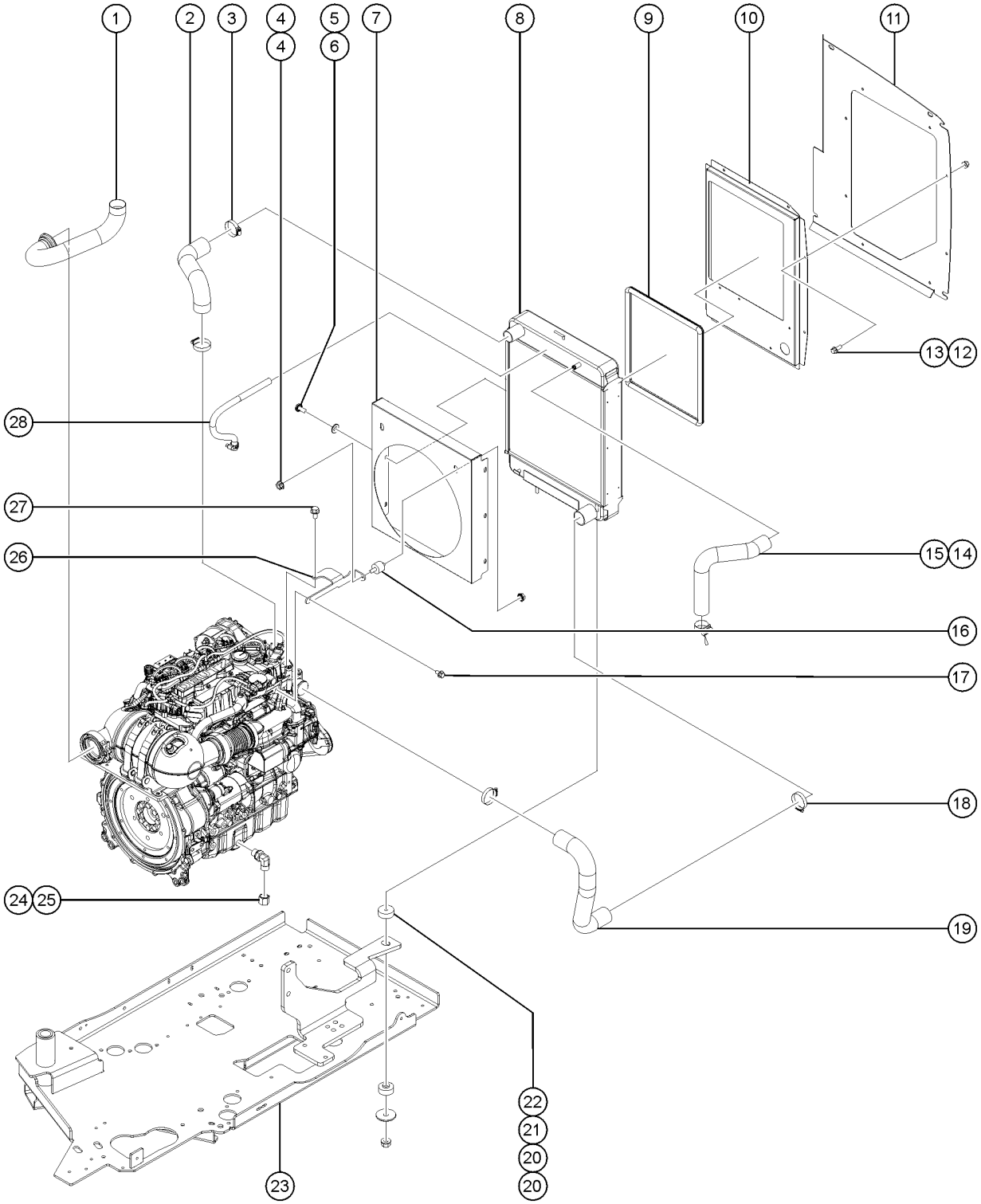

512.1 Deutz D2.9L4, View 2

Item	Part No.	Description	Qty.
21	824120GT	WASHER,FLAT,.375X1.50X.125,ZAG	2
22	824029GT	NUT, TL FLG, 3/8-16, G, ZAG	2
23		Ref. WELDMENT, ENGINE TRAY refer to 528.1	
24	69775GT	CAP,520112-8	1
25	54428GT	FITTING,HYDRAULIC,90DEG,O-RING	1
26	214237GT	FORMING,RAD BRACE,DEUTZ D2.9	1
27	1251983GT	SCREW,HHF,M8-1.25X16,DIN6921,10.9,ZAB	1
28	1282118GT	HOSE ASSY, RADIATOR VENT (from SN S65XCH-48760), (to SN S65XCH-49329)	1

513.1 Deutz D2.9L4, View 3

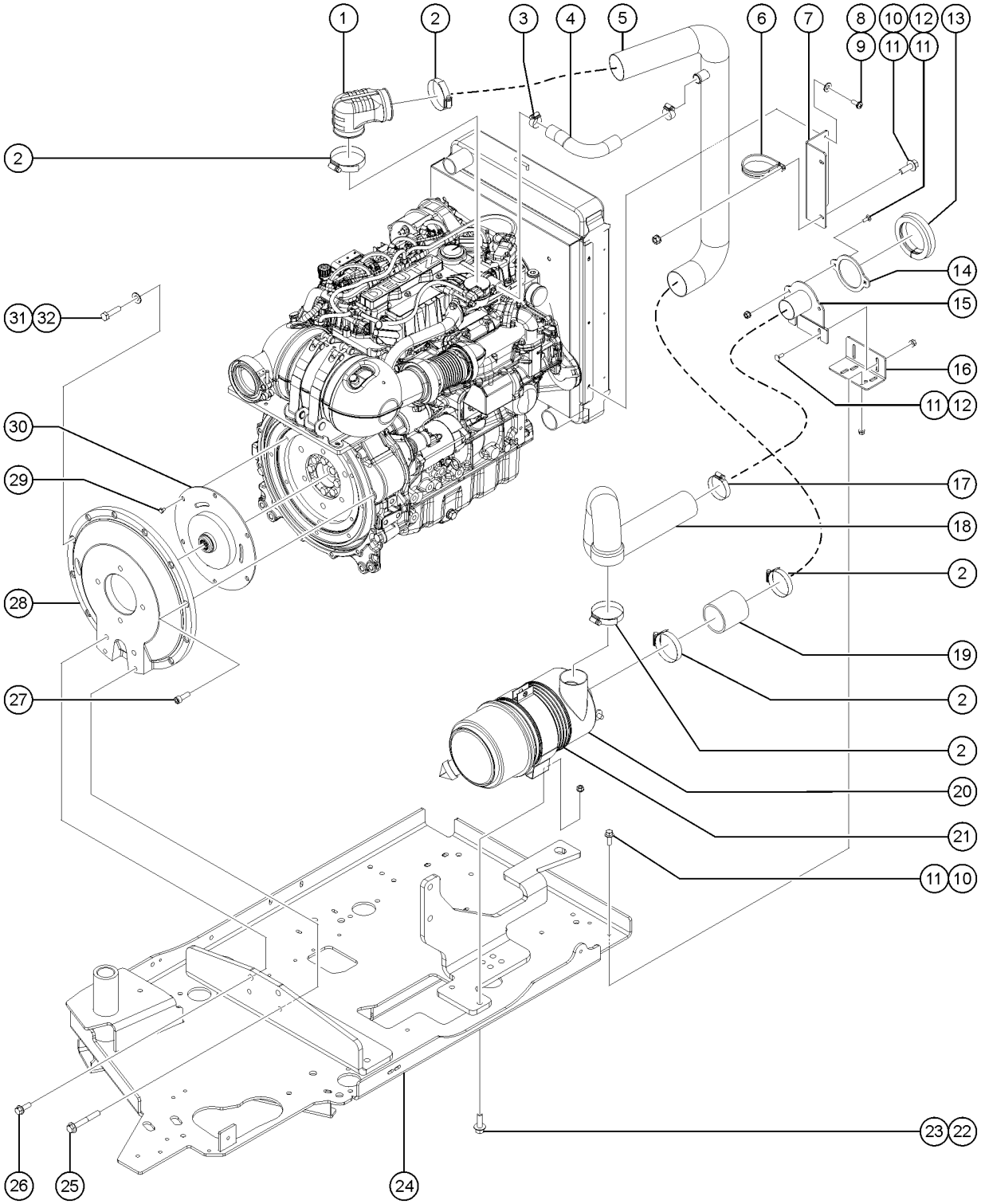

513.1 Deutz D2.9L4, View 3

Item	Part No.	Description	Qty.
A	237188GT	ENGINE KIT, DEUTZ D2.9L4 (to SN S65XCH-50224), (Due to Tier 4 regulations, many engine replacement parts require the engine serial number at time of order placement. When ordering engine parts please have both machine and engine serial numbers available. For internal engine parts, contact engine dealer)	
B	1323443GT	ENGINE KIT, EMR5, DEUTZ D2.9 from SN S65XCH-50225	
1	214686GT	AIR INTAKE ELBOW,90 DEGREE	1
2	45435GT	CLAMP,HOSE,2.50"***	5
3	30348GT	CLAMP,HOSE,1.00 (from SN S65XCH-48760), (to SN S65XCH-49329)	2
4	1255894GT	HOSE,PCV,DEUTZ D2.9 to SN S65XCH-50839	1
4B	1326333GT	HOSE, PCV, DEUTZ D2.9 from SN S65XCH-50840	1
5	219976GT	WELDMENT,STEEL INTAKE TUBE	1
6	45455GT	CLAMP,2.75,#44 X 1/4,RUB CUSH*	2
7	217877GT	FORMING,CLEAN AIR BRACKET	1
8	824220GT	SCREW,PHPM SEMS ET,10-24X.5,ZA	3
9	1253185GT	WASHER,FLAT,#10,USS,ZAG	3
10	824078GT	SCREW,HHF,1/4-20X.75,8,ZAG	4
11	824027GT	NUT, TL FLG, 1/4-20, G, ZAG	8
12	824124GT	BOLT, CARRIAGE, 1/4-20 X .75, 5, ZAG	4
13	1262842GT	SEAL,AIR INTAKE ADAPTER,LOWER	1
14	1273081GT	SHEET,AIR SEAL BACKING	1
15	1272965GT	WELDMENT, ADAPTER, INTAKE	1
16	1272967GT	FORMING, ADAPTER, INTAKE	1
17	35434GT	CLAMP,HOSE,2.00*** from SN S65XCH-48760	1
18	217930GT	HOSE,RAW AIR,DEUTZ D2.9	1
19	34162-300GT	HOSE,AIR INTAKE 2.50" ID	1
20	63463GT	AIR CLEANER,NELSON*** this is the all plastic housing type, for the metal type housing air filter assembly see PN 27915	1
20-	52866GT	EVACUATOR VALVE-AIR CLEANER	
20-	58415GT	CLIP,AIR CLEANER END CAP***	
20-	62420GT	FILTER,AIR***	
20-	65810GT	BAFFLE, AIR CLEANER (27915)** dust cap	

513.1 Deutz D2.9L4, View 3

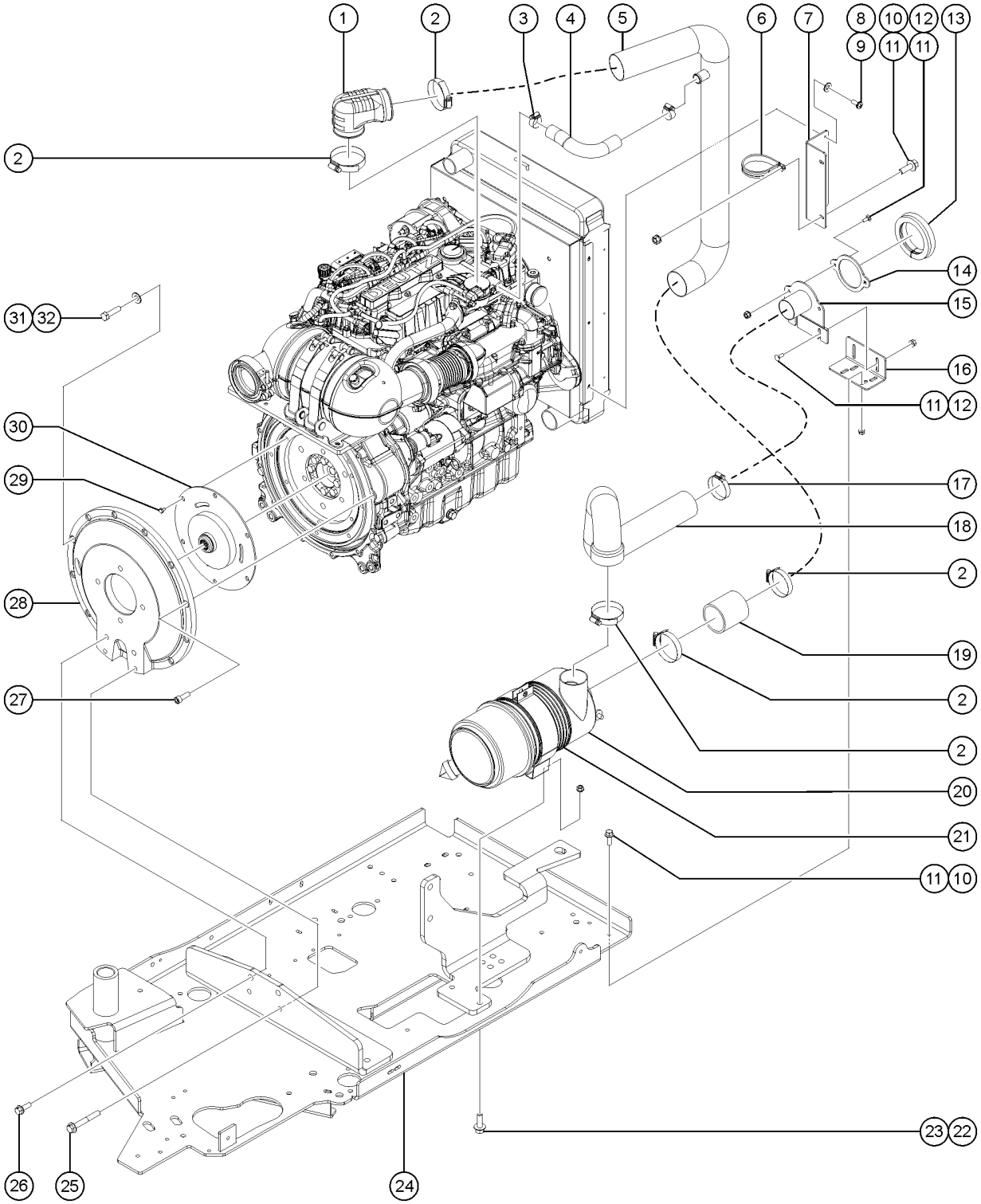

513.1 Deutz D2.9L4, View 3

Item	Part No.	Description	Qty.
21	53952GT	BRKT,AIR CLEANER ORIENTATION**	1
22	824086GT	SCREW,HHF,5/16-18X1,8,ZAG	2
23	824028GT	NUT, TL FLG, 5/16-18, G, ZAG	2
24		Ref. ENGINE TRAY refer to 528.1	
25	826008GT	SCREW,HHF,M10-1.5X75,DIN6921,1	2
26	1253498GT	SCREW,HHF,1/2-13X1.5,8,ZAG	2
27	1255666GT	SCREW,SHC,M10-1.50X30,DIN912,1	9
28	70381GT	COVER,FLYWHEEL CASTING	1
29	1257421GT	SCREW,HHC,M10-1.5X16,DIN933,10	6
30	128004GT	COUPLER,15 TOOTH,FBA,SAE8*** includes 8 bolts	1
31	25548GT	SCREW,HHC,M10 X 40MM,GRD8	1
32	22699GT	WASHER, FLAT, M10, ZINC PLTD.	1

514.1 Deutz D2.9L4, View 4

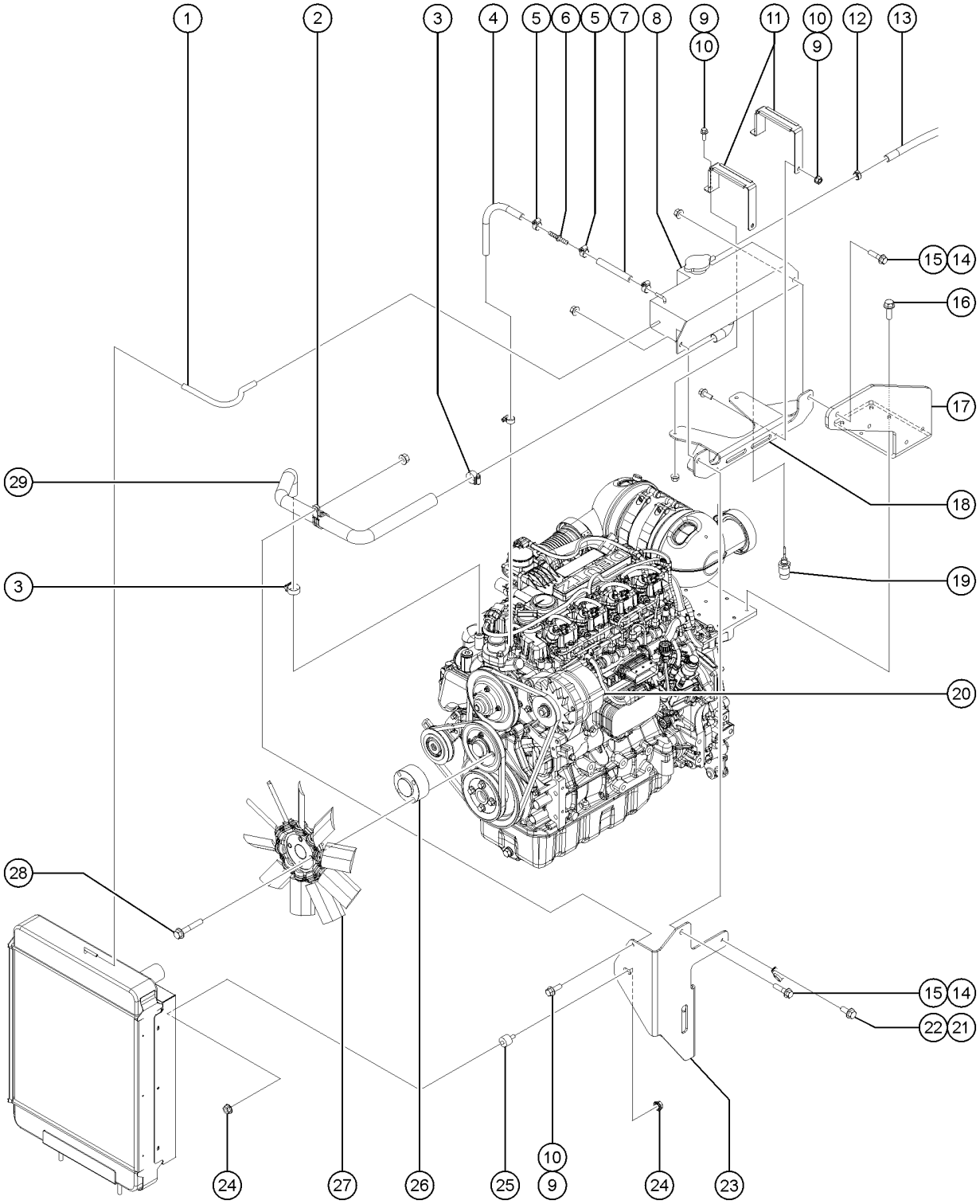

514.1 Deutz D2.9L4, View 4

Item	Part No.	Description	Qty.
1	823523GT	HOSE,RADIATOR VENT,DEUTZ D2.9	1
2	119394GT	CLAMP,1.38,#212X3/8,RUB CUSH	1
3	6833GT	CLAMP,0.50,#8 X 1/4,RUB CUSH (from SN S65XCH-48760), (to SN S65XCH-49329)	3
4	824600GT	HOSE,HEATER,1/4" 4" cut to 8.5 inches	9 inches
5	21465GT	CLAMP,HOSE,.25" - .63" X .3125	4
6	1282119GT	2MM ORIFICE UNION, 1/4" HOSE	1
7	824600GT	HOSE,HEATER,1/4" 4" cut to 3.5 inches	4 inches
8	161938GT	EXPANSION TANK,METAL,D2.9	1
8-	1274900GT	SIGHT GLASS for 161938	
8-	1254823GT	CAP,RADIATOR,PERKINS (94232) for 161938	
9	824078GT	SCREW,HHF,1/4-20X.75,8,ZAG	5
10	824027GT	NUT, TL FLG, 1/4-20, G, ZAG	5
11	1253922GT	FORMING,EXP TANK BAND,D2.9	2
11-	1254452GT	EXTRUSION,RUBBER STRIP,LG,D2.9 (for 1253922)	
11-	1254453GT	EXTRUSION,RUBBER STRIP,SM,D2.9 (for 1253922)	
12	31983GT	CLAMP,HOSE,1 EAR, 9/16	1
13	1259441GT	HOSE,OVERFLOW,DEUTZ D2.9 replaced by 822606GT	1
13B	822606GT	TUBING,VINYL,3/8" CLEAR cut at 46.00" long	1
14	824092GT	SCREW,HHF,3/8-16X1.5,8,ZAG	2
15	824029GT	NUT, TL FLG, 3/8-16, G, ZAG	2
16	824133GT	SCREW,HHF,M8-1.25X25,DIN6921,10.9,ZAB	4
17	1255692GT	FORMING,EXPANSION TANK SUPT	1
18	1254267GT	WDMT,EXPANSION TANK SUPT	1
19	218715GT	COOLNT LEVL SENSR, DEUTZTCD3.6	1
20	236251GT	ALTERNATOR,95 AMP,DEUTZ TCD3.6	1
21	1251983GT	SCREW,HHF,M8-1.25X16,DIN6921,10.9,ZAB from SN S65XCH-48760	1
22	45454GT	CLAMP,0.75,#12 X 3/8,RUB CUSH* from SN S65XCH-48760	1

514.1 Deutz D2.9L4, View 4

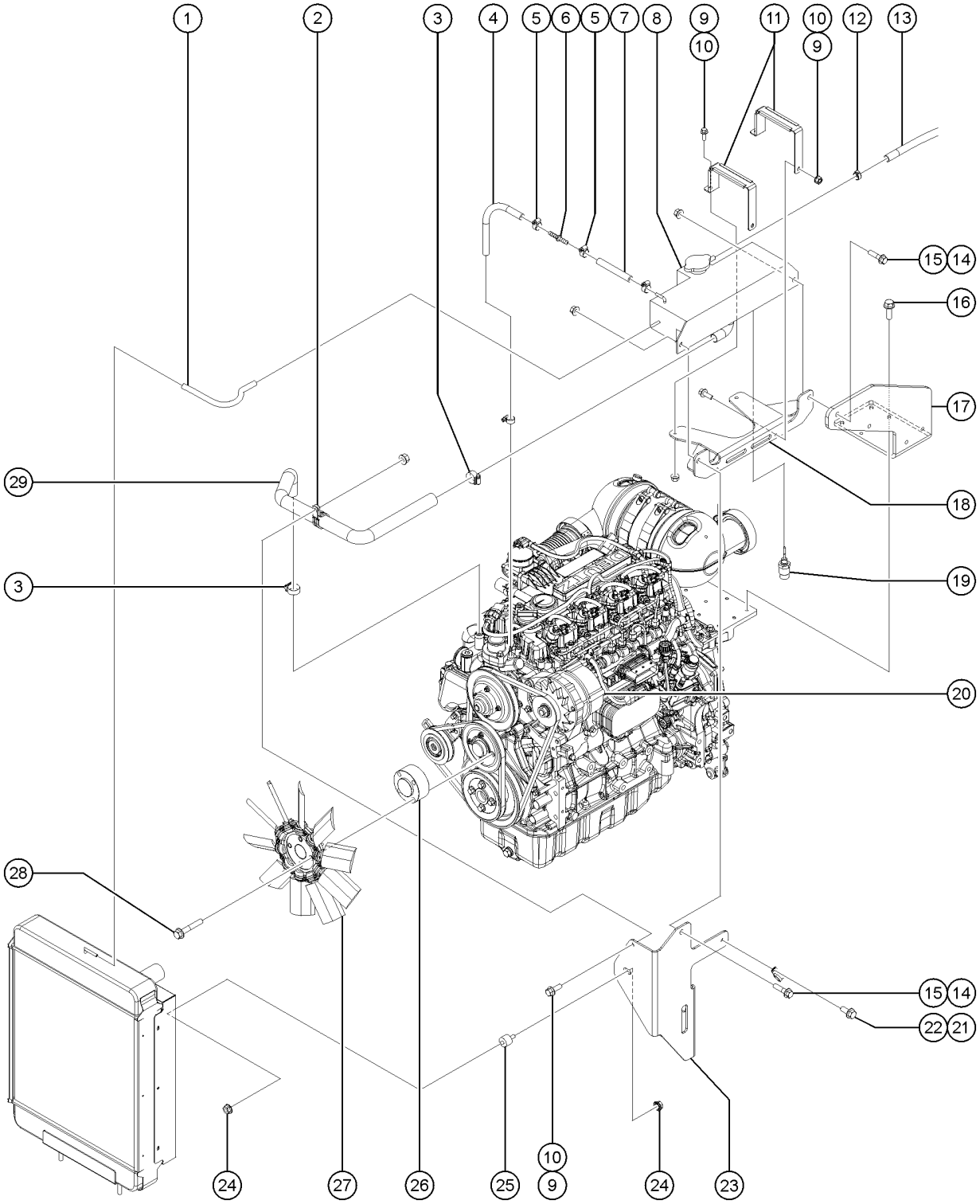

514.1 Deutz D2.9L4, View 4

Item	Part No.	Description	Qty.
23	214934GT	FORMING,RAD EXPSN TANK SUPT	1
24	1256679GT	NUT,SERRATED,1/4-20,8,ZAG	2
25	219437GT	ISOLATOR,VIBRATION	1
26	1256599GT	SPACER, FAN, DEUTZ, 29.5MM LNG	1
27	214682GT	FAN, 10 BLADE, 15"	1
28	1257231GT	SCREW,HHF,M8-1.25X50,DIN6921,10.9,ZAB	4
29	1251731GT	HOSE,EXPANSION TANK,D2.9	1

515.1 Deutz D2.9L4, View 5

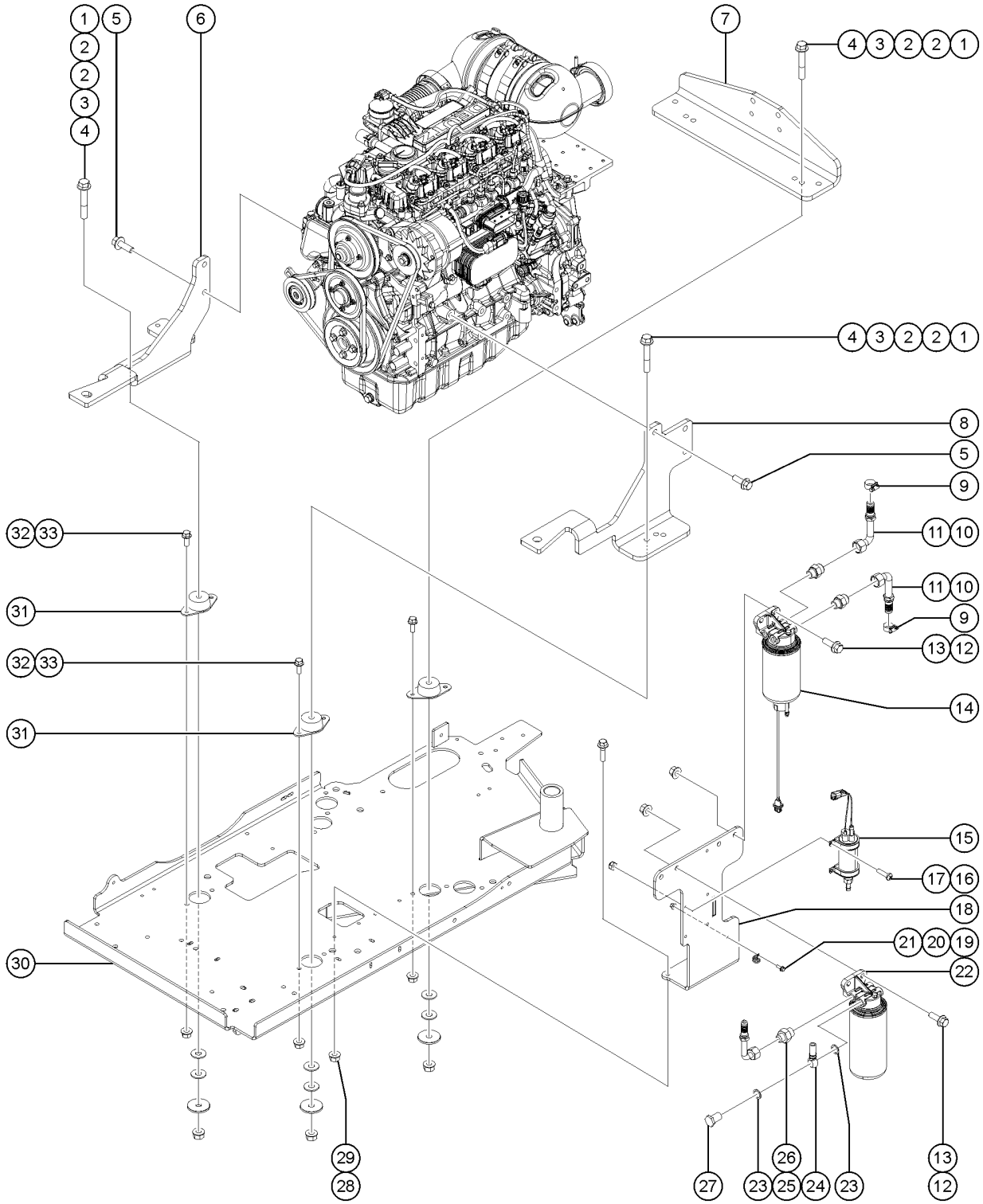

515.1 Deutz D2.9L4, View 5

Item	Part No.	Description	Qty.
1	1251994GT	SCREW,HHF,1/2-13X3,8,ZAG	4
2	1255760GT	WASHER,FLAT,1/2,USS,ZAG	8
3	1256283GT	WASHER,FLAT,.5X2.25X.188,ZAG	4
4	1274172GT	NUT,NYLOCK FLG,1/2-13,G,ZAG	4
5	1256776GT	SCREW,HHF,M14-2.0X35,DIN6921,10.9,ZAB	5
6	237190GT	FORMING, RIGHT ENGINE MOUNT	1
7	237191GT	FORMING, REAR ENGINE MOUNT	1
8	237189GT	FORMING, LEFT ENGINE MOUNT	1
9	46131GT	CLAMP,HOSE,.63" - 1.0" X .5"	2
10	162207GT	FITTING,ELBOW,8GS-8FJX90S	2
11	162209GT	FITTING,CONN,16MM-8MJ	2
12	824091GT	SCREW, HHF, 3/8-16 X 1.25, 8, ZAG	4
13	1274322GT	NUT,NYLOCK FLG,3/8-16,F,ZAG	4
14	1261239GT	ASSY,FUEL PREFILTER,DEUTZ 2.9 includes head, filter and sensor cable	1
14-	1261240GT	CABLE,WIF SENSOR,DEUTZ 2.9	
14-	236260GT	PRE-FILTER,FUEL,DEUTZ TCD3.6	
14-	1261241GT	SEAL,WIF SENSOR,DEUTZ 2.9	
15	236259GT	LIFT PUMP,FUEL,DEUTZ TCD3.6	
15-	21465GT	CLAMP,HOSE,.25" - .63" X .3125	1
15-	46131GT	CLAMP,HOSE,.63" - 1.0" X .5"	1
16	824215GT	SCREW, PHPM, 10-32 X .75, ZAG	4
17	6178GT	NUT, NYLOCK, 10-32	4
18	1257961GT	WELDMENT, FUEL FILTER BRACKET	1
19	824078GT	SCREW,HHF,1/4-20X.75,8,ZAG	2
20	13268GT	CLAMP,0.75,#12 X 1/4,RUB CUSH	2
21	1277924GT	NUT,NYLOCK FLG,1/4-20,F,ZAG	2
22	1261236GT	ASSY,FUEL FILTER,DEUTZ 2.9	1
22-	214228GT	FILTER, DEUTZ 2.9, FUEL	

515.1 Deutz D2.9L4, View 5

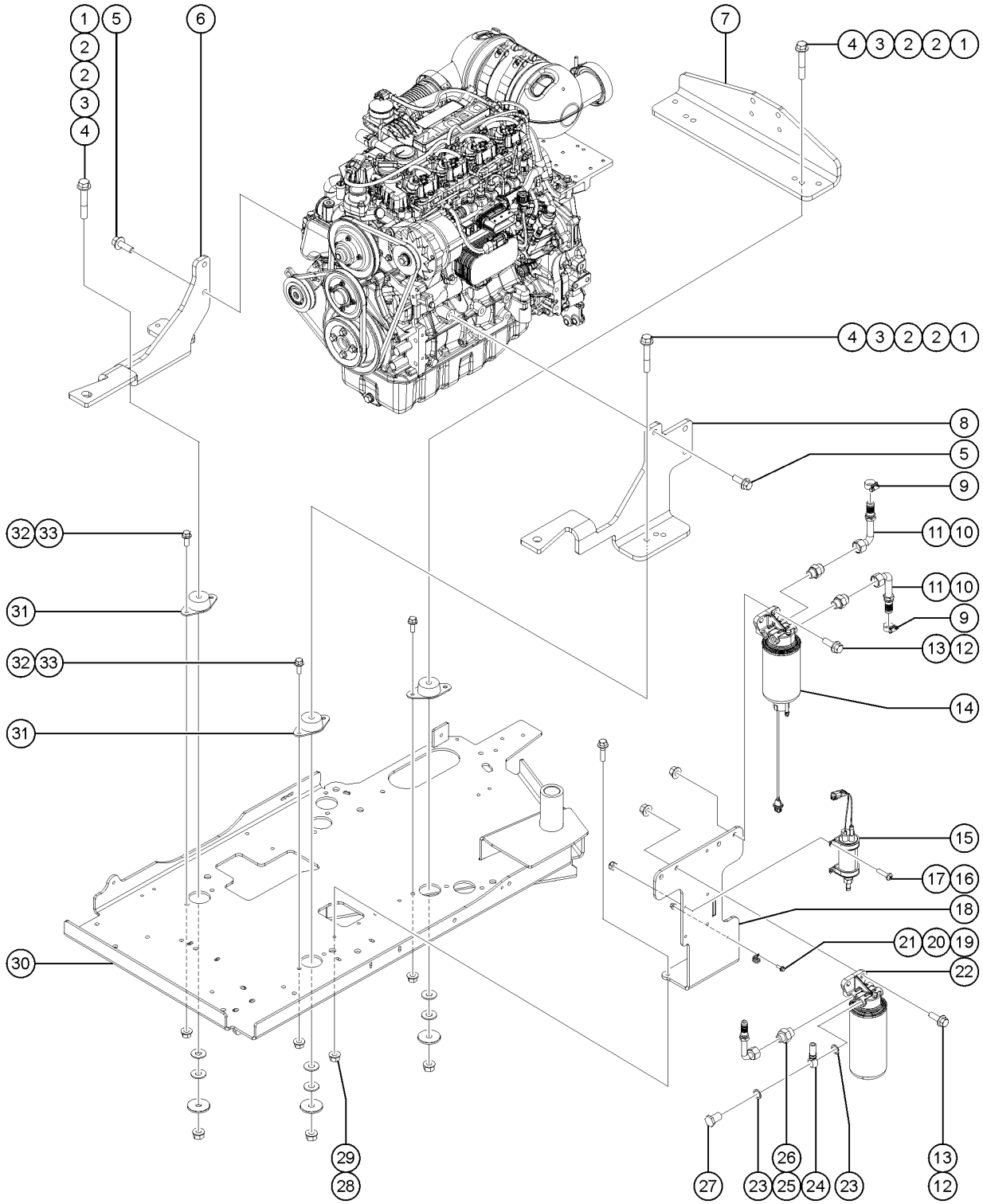

515.1 Deutz D2.9L4, View 5

Item	Part No.	Description	Qty.
23	1255400GT	WASHER,COPPER,DEUTZ,QC	2
24	1255396GT	FITTING,FUEL,1/2,D2.9,QC	1
25	162208GT	FITTING,CONN,16MM-6MJ	1
26	162206GT	FITTING,ELBOW,6GS-6FJX90S	1
26-	21465GT	CLAMP,HOSE,.25" - .63" X .3125	1
27	1255399GT	BOLT,BANJO,DEUTZ,QC	1
28	1277924GT	NUT,NYLOCK FLG,1/4-20,F,ZAG	2
29	824079GT	SCREW,HHF,1/4-20X1,8,ZAG	2
30		Ref. WELDMENT, ENGINE TRAY refer to 528.1	1
31	70452GT	ISOLATOR,ENGINE VIBRATION***	4
32	824090GT	SCREW,HHF,3/8-16X1,8,ZAG	8
33	1274322GT	NUT,NYLOCK FLG,3/8-16,F,ZAG	8

516.1 Deutz 2.9L Turbo, View 1

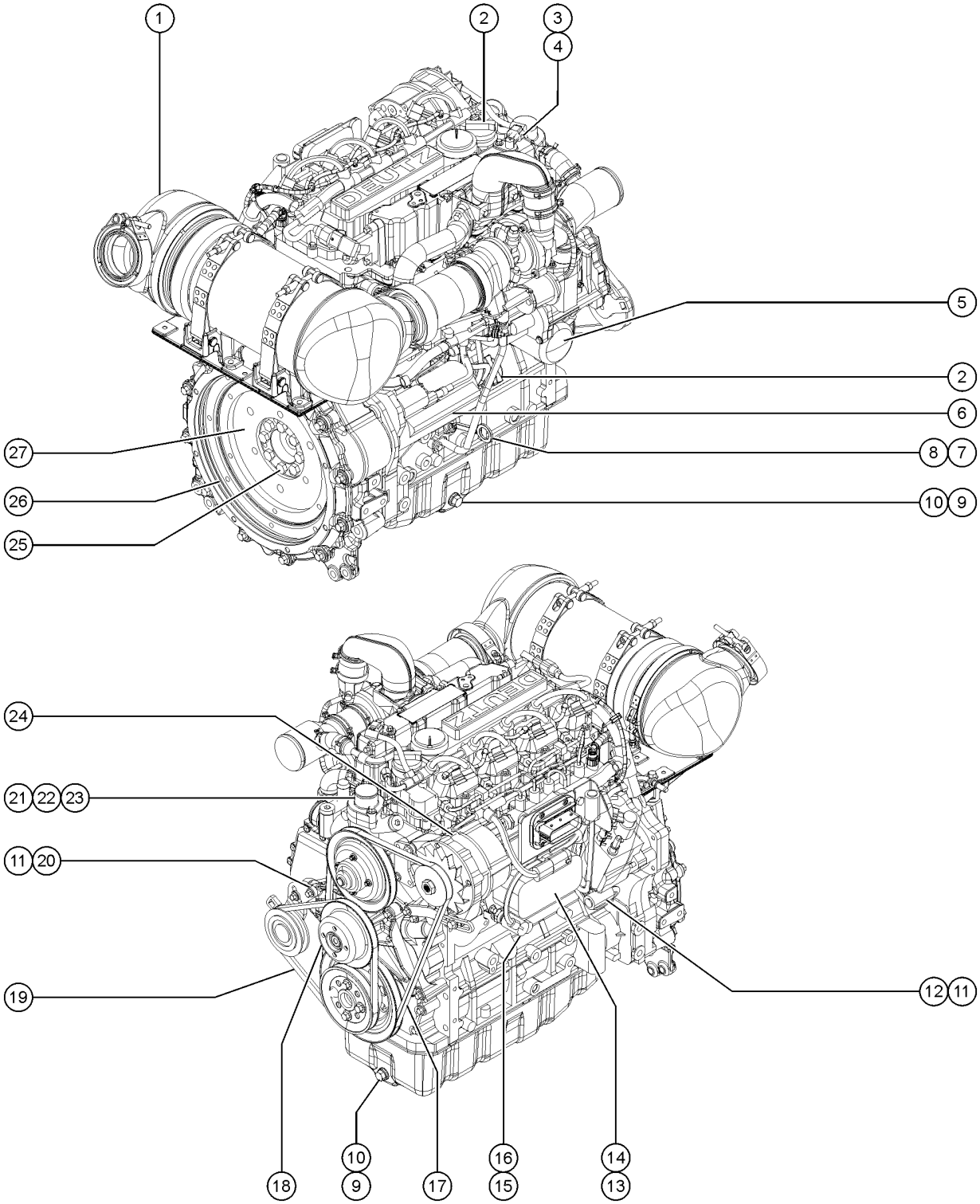

516.1 Deutz 2.9L Turbo, View 1

Item	Part No.	Description	Qty.
A	1262870GT	GLOW PLUG, DEUTZ	4
B	1262871GT	SEAL, FRONT ENGINE,DEUTZ	1
C	1262872GT	SEAL, REAR ENGINE,DEUTZ	1
D	1262874GT	WATER PUMP	1
E	1262875GT	O-RING, WATER PUMP	1
F	1259654GT	INTAKE BREATHER	1
G	1259899GT	HARNESS, ENGINE, DEUTZ TD2.9	1
H	1277974GT	PINS,CONNECTOR,INJ HARNESS,D2.9	
1		OXIDATION CATALYST,DEUTZ (diesel oxygen catalyst/muffler)(contact Genie Parts; engine serial number required)	1
2	29557GT	CAP,OIL FILLER,DEUTZ,DIESEL***	2
3	1262896GT	SENSOR,INTAKE AIR PRESSURE	1
4	1262897GT	O-RING, INTAKE AIR PRESSURE SENSOR	1
5	49924GT	FILTER,OIL,DEUTZ F4L1011F	1
6	1254594GT	STARTER,3.2KW,DEUTZ D2.9	1
6-	1262868GT	BOLT, DEUTZ STARTER not included sold seperately	
6B	825939GT	FORMING, CLAMP, BATTERY CABLE	
6B-	78736GT	CLAMP,2 HOSE,PLASTIC,5/8 for 825939	
7	825708GT	DIPSTICK,TD2.9	1
8	1262881GT	ORING, OIL DIP STICK	1
9	102587GT	PLUG,ENGINE OIL,DEUTZ F4L2011	2
10	108538GT	RING / SEALING	2
11	1262894GT	SENSOR,CAM/CRANKSHAFT POSITION (crankshaft)	1
11B	1262894GT	SENSOR,CAM/CRANKSHAFT POSITION hidden from view (camshaft)	1
12	1262895GT	O-RING, CRANKSHAFT POSITION SENSOR	1
13	1260357GT	OIL COOLER,TD2.9	1
14	1262883GT	GASKET, OIL COOLER, DEUTZ	1
15	824673GT	SENSOR,LOW PRESSURE,DEUTZ 2.9L	1
16	1262893GT	O-RING, OIL PRESSURE SENSOR	1

516.1 Deutz 2.9L Turbo, View 1

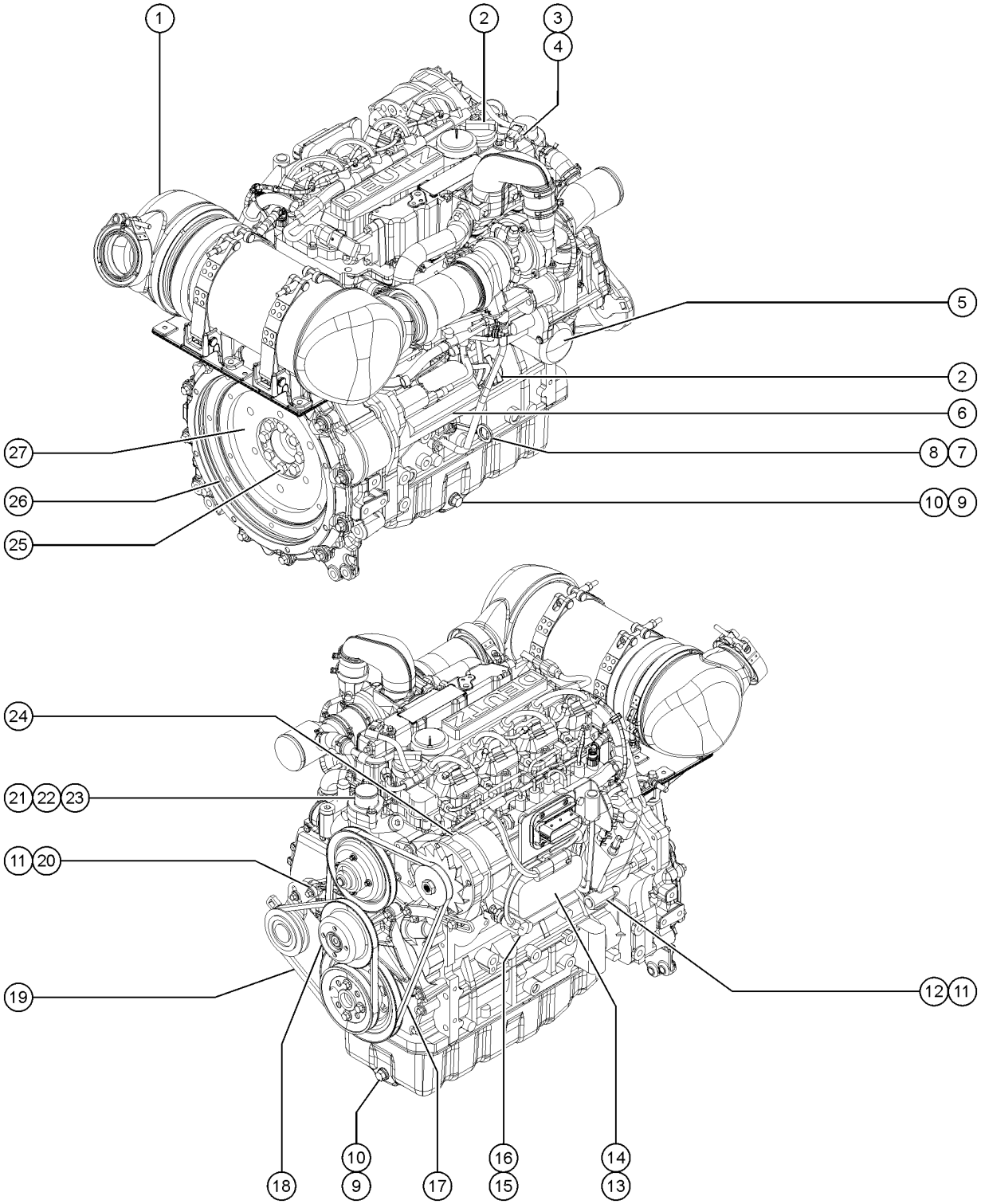

516.1 Deutz 2.9L Turbo, View 1

Item	Part No.	Description	Qty.
17	1262866GT	FAN BELT, ALTERNATOR	1
18	236248GT	PULLEY ASSEMBLY,ALTERNATOR,TCD	1
19	1262867GT	V-BELT, DEUTZ	1
20	1262899GT	O-RING, CAMSHAFT POSITION SENSOR hidden from view	1
21	1262877GT	THERMOSTAT HOUSING	1
22	1262876GT	THERMOSTAT,DEUTZ	1
23	1262878GT	GASKET, THERMOSTAT HOUSING	1
24	236251GT	ALTERNATOR,95 AMP,DEUTZ TCD3.6	1
25	1262873GT	BOLT, DEUTZ FLYWHEEL	8
26	89785GT	RING GEAR,DEUTZ F3L2011F	1
27	1259660GT	FLYWHEEL, SAE 8/10 order with item 25	1

517.1 Deutz 2.9L Turbo, View 2

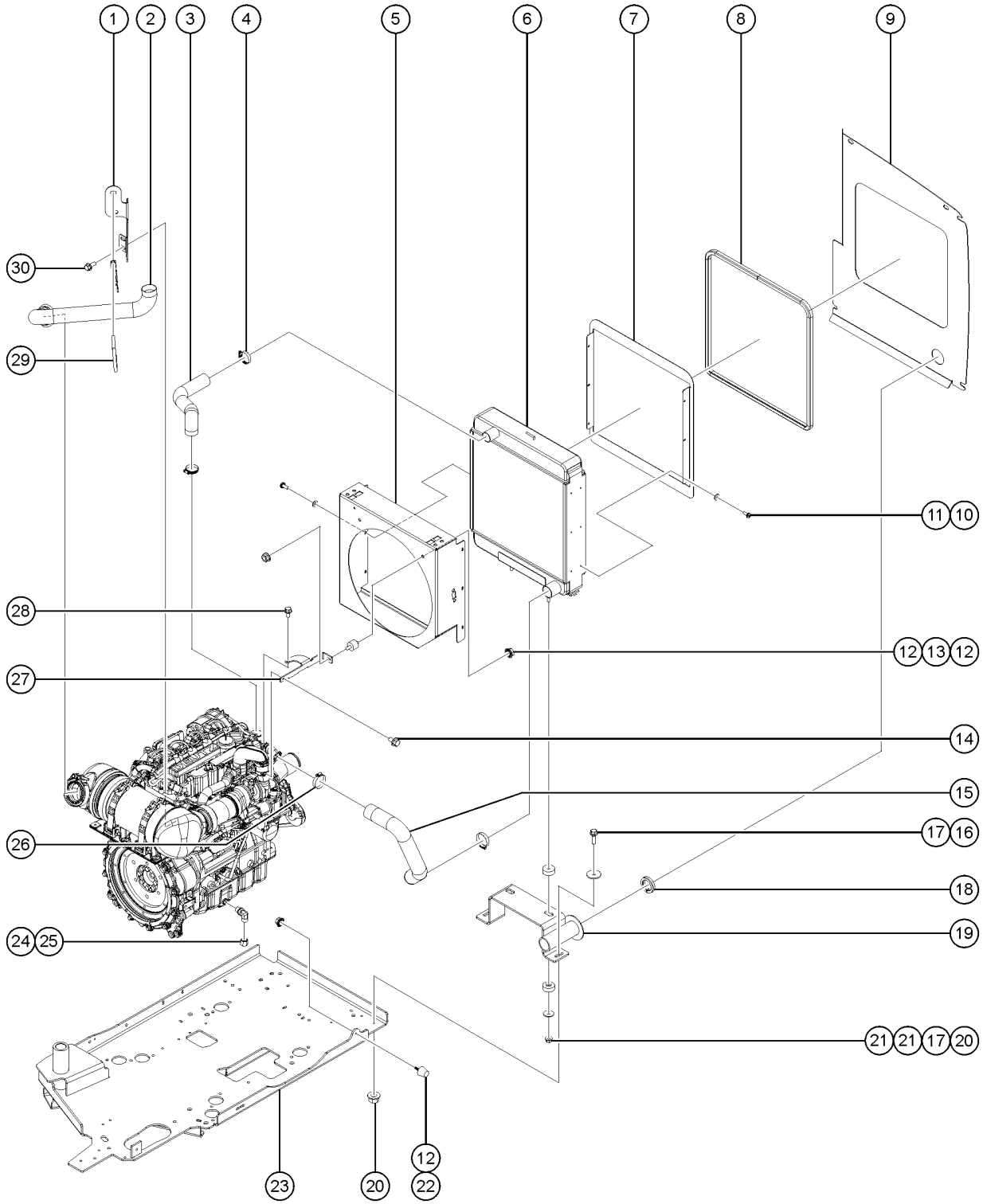

517.1 Deutz 2.9L Turbo, View 2

Item	Part No.	Description	Qty.
A		Due to Tier 4 regulations, many engine replacement parts require the engine serial number at time of order placement. When ordering engine parts please have both machine and engine serial numbers available. For internal engine parts, contact engine dealer	
1	1262831GT	FORMING, SUPPORT, TAILPIPE	1
2	826822GT	EXHAUST PIPE, TIER IV DEUTZ, Z	1
3	162283GT	HOSE, UPPER RADIATOR, DEUTZ D	1
4	22672GT	CLAMP,HOSE,1.75	2
5	1261921GT	SHROUD, 17" FAN	1
5-	45454GT	CLAMP,0.75,#12 X 3/8,RUB CUSH* to SN S65CH-48759	1
6	826795GT	RADIATOR,6-CORE,19.375W X 18.1	1
7	1268010GT	FORMING, SHROUD, INLET, RADIATOR	1
8	1262841GT	TRIM SEAL,RADIATOR,DEUTZ TD2.9	1
9	1262839GT	FORMING, BAFFLE, AIR INTAKE	1
10	824220GT	SCREW,PHPM SEMS ET,10-24X.5,ZA	12
11	1253185GT	WASHER,FLAT,#10,USS,ZAG	12
12	1255805GT	NUT,SERRATED,5/16-18,8,ZAG	5
13	219437GT	ISOLATOR,VIBRATION	1
14	237238GT	SCREW,HHF,M6-1.0X12,DIN6921,10	1
15	162284GT	HOSE,LOWER RADIATOR, 2.9L DEUT	1
16	824091GT	SCREW, HHF, 3/8-16 X 1.25, 8, ZAG	2
17	824120GT	WASHER,FLAT,.375X1.50X.125,ZAG	4
18	1262842GT	SEAL,AIR INTAKE ADAPTER,LOWER	1
19	1262838GT	WELDMENT, SUPPORT, RADIATOR	1
20	824029GT	NUT, TL FLG, 3/8-16, G, ZAG	4
21	24038GT	SHOCK MOUNT,SMALL	4
22	1261277GT	RUBBER BUMPER, 1.25 X 1.25 IN	2
23		Ref. WELDMENT, ENGINE TRAY refer to 528.1	1
24	69775GT	CAP,520112-8	1
25	54428GT	FITTING,HYDRAULIC,90DEG,O-RING	1

517.1 Deutz 2.9L Turbo, View 2

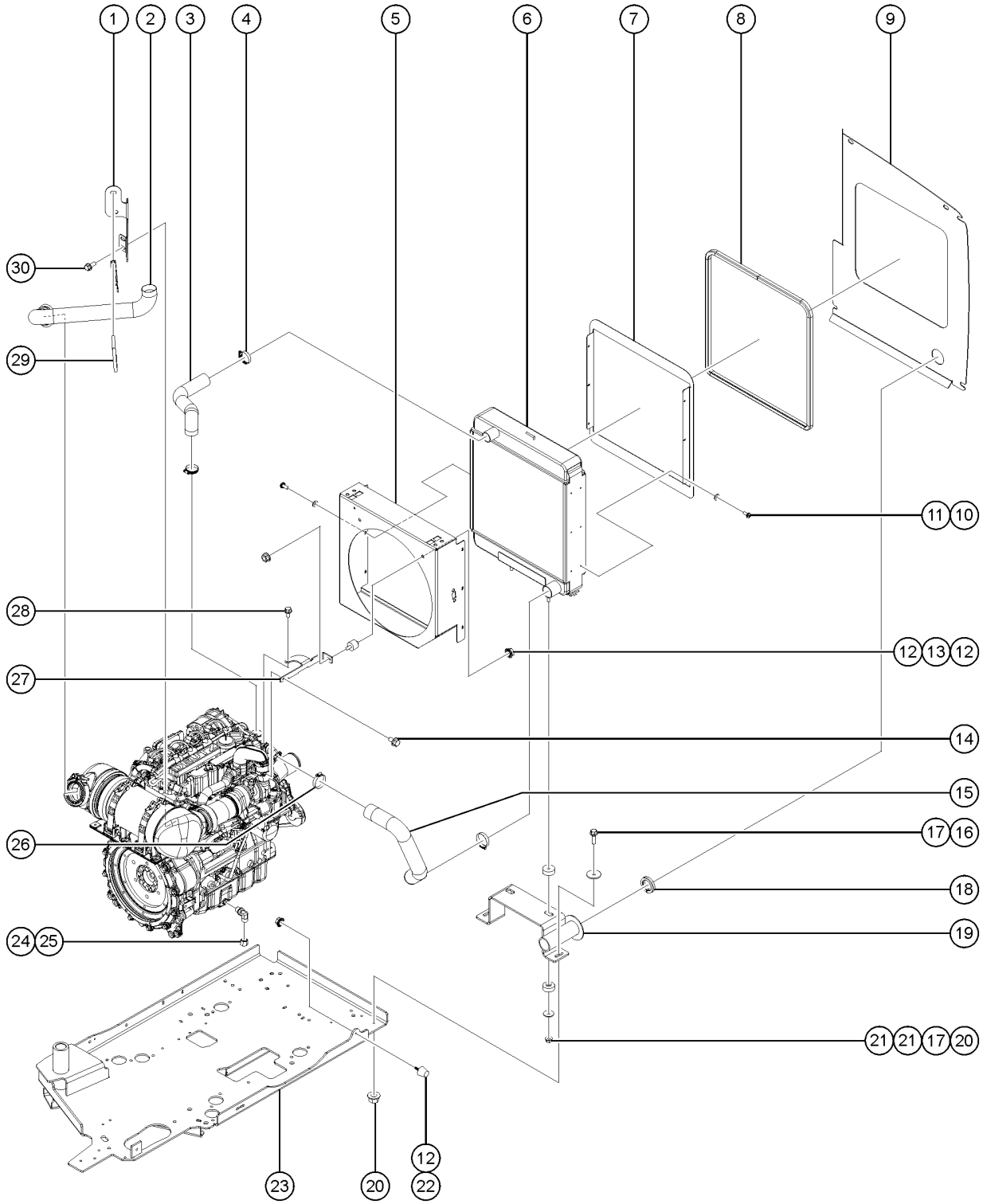

517.1 Deutz 2.9L Turbo, View 2

Item	Part No.	Description	Qty.
26	35434GT	CLAMP,HOSE,2.00***	2
27	1273919GT	FORMING, SUPPORT, RADIATOR	1
28	1251983GT	SCREW,HHF,M8-1.25X16,DIN6921,10.9,ZAB	1
29	71911GT	CLAMP,MUFFLER, 2.50 INCH	1
30	824132GT	SCREW,HHF,M8-1.25X20,DIN6921,10.9,ZAB	2

518.1 Deutz 2.9L Turbo, View 3

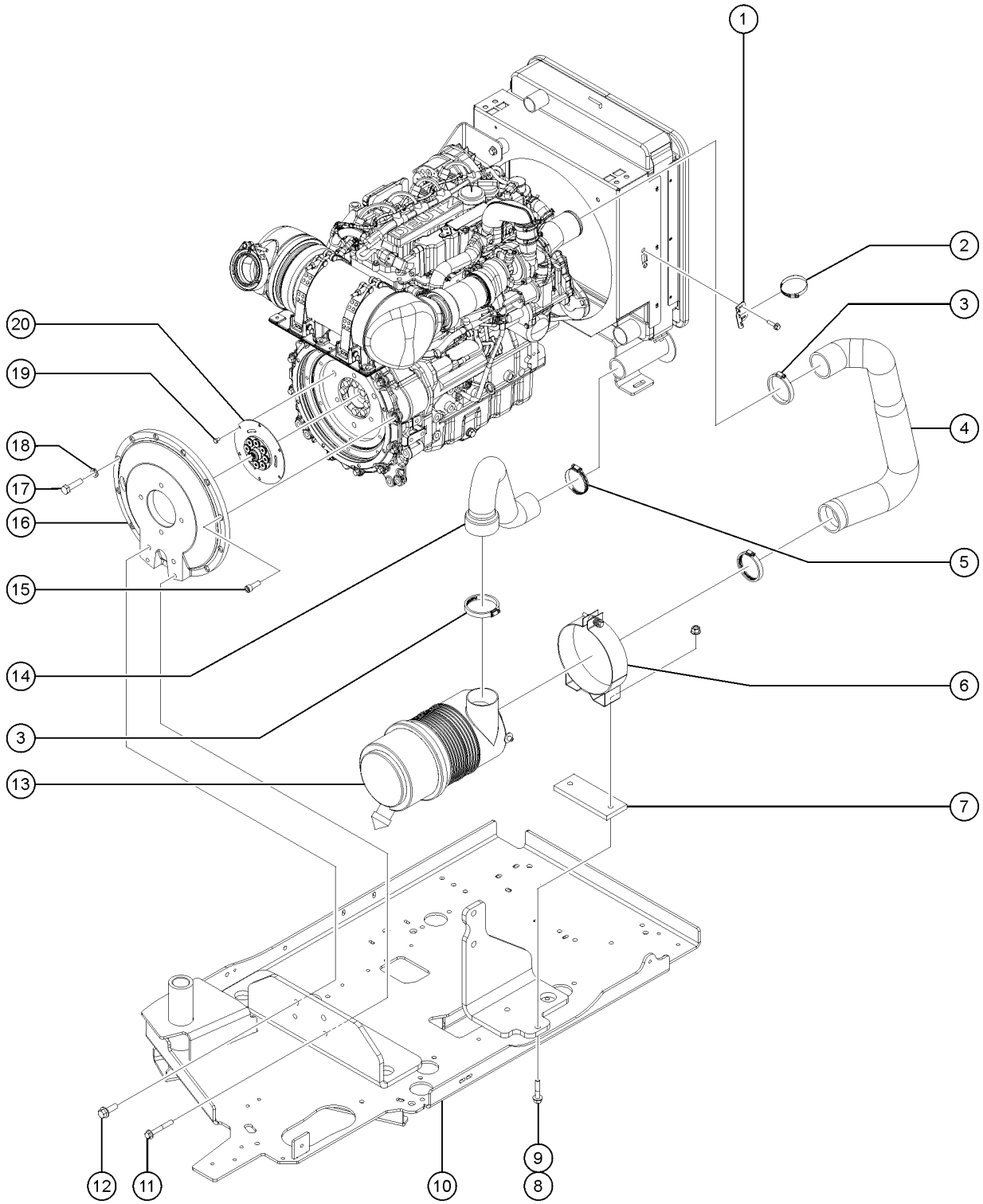

518.1 Deutz 2.9L Turbo, View 3

Item	Part No.	Description	Qty.
A		Due to Tier 4 regulations, many engine replacement parts require the engine serial number at time of order placement. When ordering engine parts please have both machine and engine serial numbers available. For internal engine parts, contact engine dealer	
B	237730GT	ENGINE KIT, DEUTZ TD 2.9 to SN S65XCH-50224	
C	1323444GT	ENGINE KIT, EMR5, DEUTZ TD2.9 from SN S65XCH-50225	
1	823751GT	BRACKET,INTAKE PIPE,MOUNT,DEUT	1
2	30971GT	CLAMP,HOSE,3.00"	2
3	30489GT	CLAMP,HOSE,3.50	3
4	1262829GT	HOSE, INTAKE, AIR	1
5	45435GT	CLAMP,HOSE,2.50"***	1
6	81468GT	MOUNTING BAND,AIR CLEANER	1
7	1273918GT	SPACER, AIR CLEANER	1
8	1255763GT	SCREW,HHF,5/16-18X1.5,8,ZAG	2
9	824028GT	NUT, TL FLG, 5/16-18, G, ZAG	2
10		Ref. WELDMENT, ENGINE TRAY refer to 528.1	
11	826008GT	SCREW,HHF,M10-1.5X75,DIN6921,1	2
12	1253498GT	SCREW,HHF,1/2-13X1.5,8,ZAG	2
13	81467GT	AIR CLEANER,NELSON	1
13-	52866GT	EVACUATOR VALVE-AIR CLEANER for 81467	
13-	62425GT	FILTER,AIR CLEANER, SUPERBOOM for 81467	
13-	75450GT	AIR CLEANER CLIPS, SUPERBOOM for 81467	
13-	75451GT	AIR CLEANER COVER, SUPERBOOM* for 81467	
14	1262828GT	HOSE, INTAKE, DEUTZ TD2.9	1
15	1255666GT	SCREW,SHC,M10-1.50X30,DIN912,1	9
16	70381GT	COVER,FLYWHEEL CASTING	1
17	25548GT	SCREW,HHC,M10 X 40MM,GRD8	1
18	824142GT	WASHER, LOCK, M10, ZAB	1
19	1257421GT	SCREW,HHC,M10-1.5X16,DIN933,10	6
20	128004GT	COUPLER,15 TOOTH,FBA,SAE8***	1

519.1 Deutz 2.9L Turbo, View 4

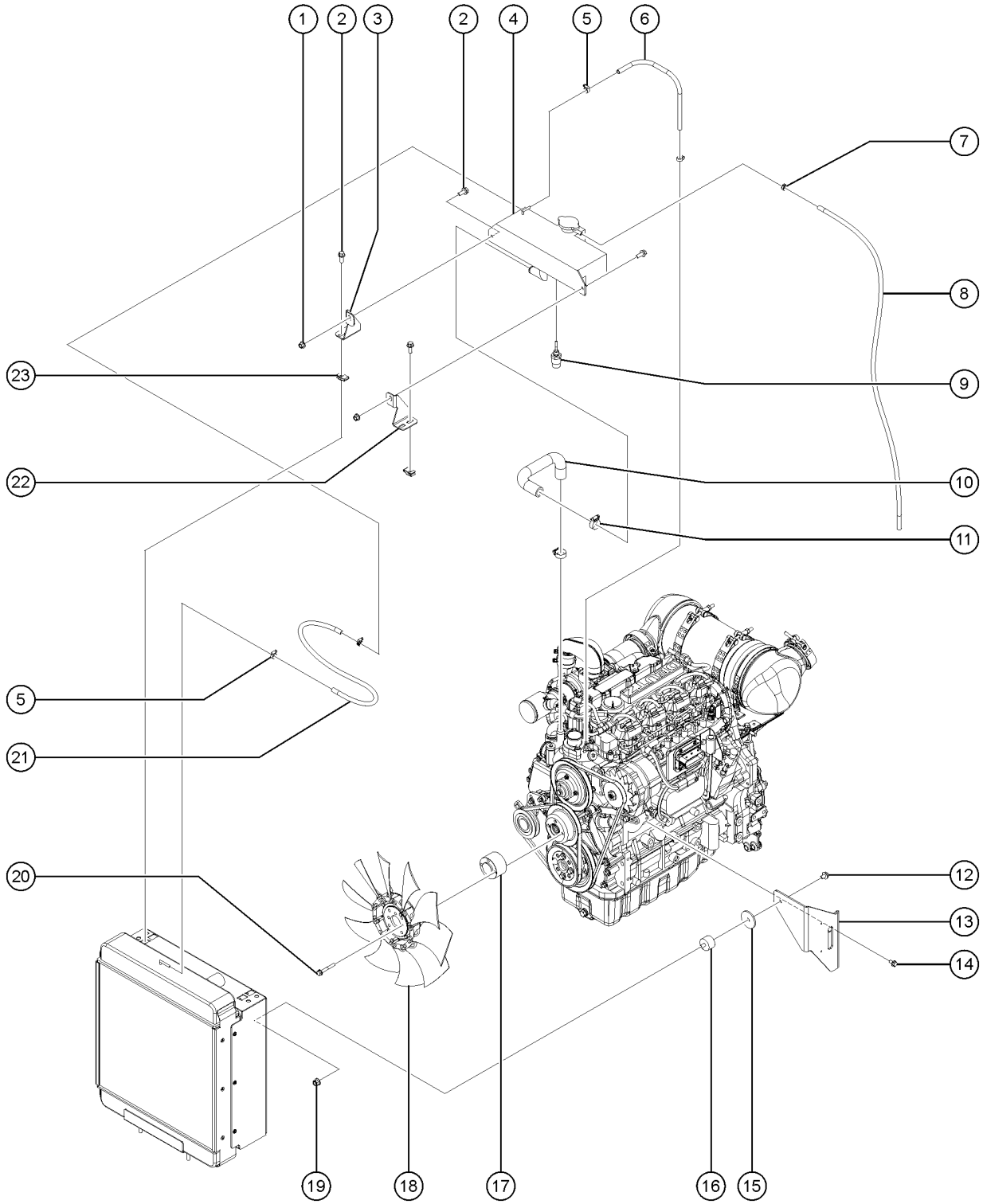

519.1 Deutz 2.9L Turbo, View 4

Item	Part No.	Description	Qty.
A		Due to Tier 4 regulations, many engine replacement parts require the engine serial number at time of order placement. When ordering engine parts please have both machine and engine serial numbers available. For internal engine parts, contact engine dealer	
1	824029GT	NUT, TL FLG, 3/8-16, G, ZAG	2
2	824090GT	SCREW,HHF,3/8-16X1,8,ZAG	6
3	1261925GT	FORMING, BRACKET, TANK, EXPANS	1
4	161938GT	EXPANSION TANK,METAL,D2.9	1
4-	1254823GT	CAP,RADIATOR,PERKINS (94232) for 161938	
5	21465GT	CLAMP,HOSE,.25" - .63" X .3125	4
6	824600GT	HOSE,HEATER,1/4" 4"	13 inches
7	31983GT	CLAMP,HOSE,1 EAR, 9/16	1
8	1259441GT	HOSE,OVERFLOW,DEUTZ D2.9 replaced by 822606GT	1
8B	822606GT	TUBING,VINYL,3/8" CLEAR cut at 46.00" long	1
9	218715GT	COOLNT LEVL SENSR, DEUTZTCD3.6	1
10	1261928GT	HOSE, TANK, EXPANSION	1
11	19273GT	CLAMP,HOSE,.75 **	2
12	237352GT	SCREW,HHF,M10-1.5X16,DIN6921,10.9,ZAB	1
13	1256165GT	FORMING,RADIATOR SUPPORT,LH	1
14	1251983GT	SCREW,HHF,M8-1.25X16,DIN6921,10.9,ZAB	2
15	1256283GT	WASHER,FLAT,.5X2.25X.188,ZAG	1
16	1255451GT	ISOLATOR VIBRATION DAMPENER	1
17	1258641GT	SPACER, FAN, DEUTZ, 43MM LNG	1
18	1251496GT	FAN,10 BLADE,17",DEUTZ 2.9L	1
19	1283015GT	NUT,NYLOCK FLG,M10-1.5,DIN6926,10,ZAB	1
20	1258771GT	SCREW,HHF,M8-1.25X60,DIN6921,10.9,ZAB	4
21	824600GT	HOSE,HEATER,1/4" 4"	25 inches
22	1261926GT	FORMING, BRACKET, TANK, EXPANS	1
23	29868GT	SPRING CLIP,3/8-16,.05-.20X.73,ZAG	4

520.1 Deutz 2.9L Turbo, View 5

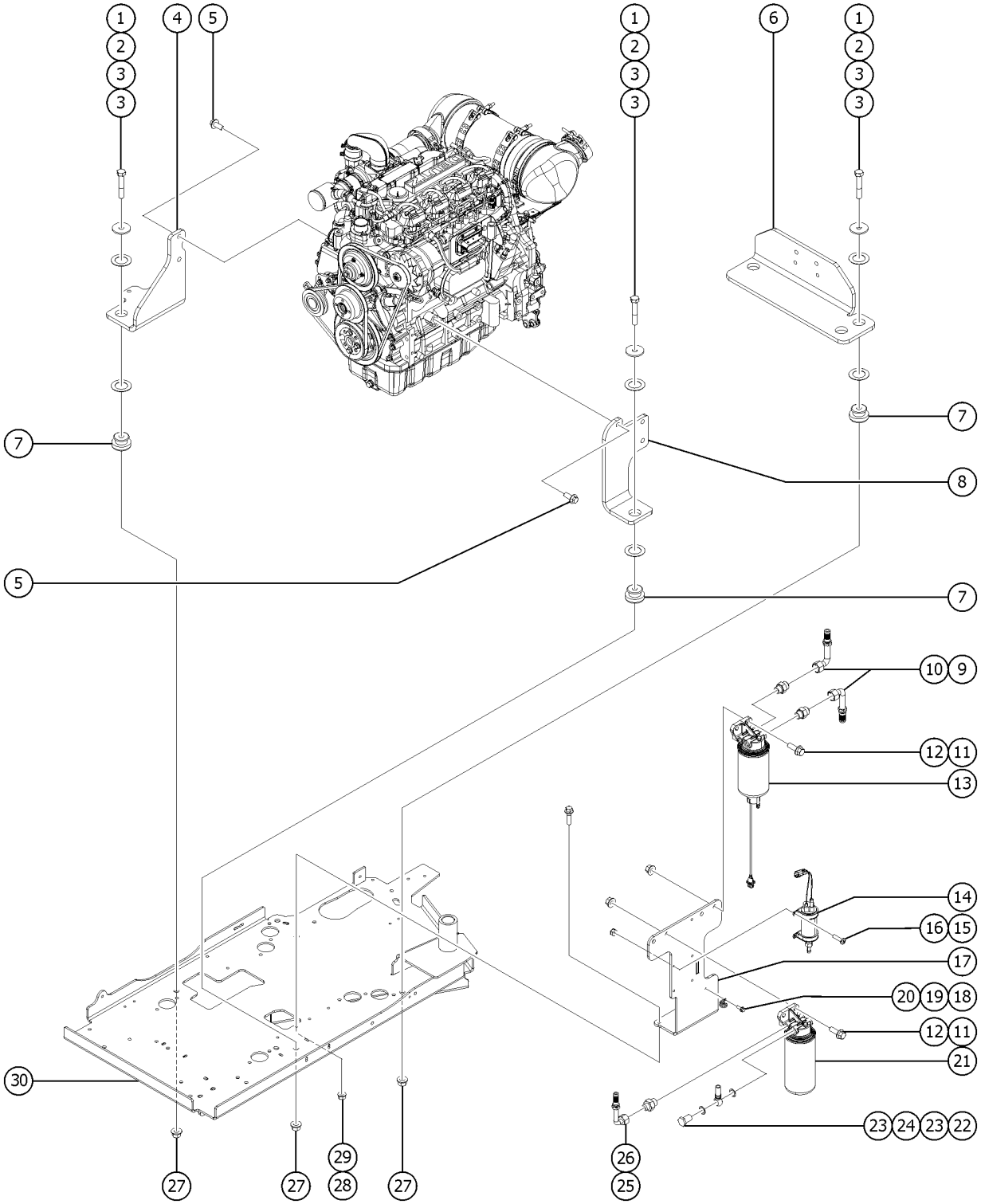

520.1 Deutz 2.9L Turbo, View 5

Item	Part No.	Description	Qty.
-		Due to Tier 4 regulations, many engine replacement parts require the engine serial number at time of order placement. When ordering engine parts please have both machine and engine serial numbers available. For internal engine parts, contact engine dealer	
1	1256169GT	SCREW,HHC,5/8-11X3.5,8,ZAG	4
2	824123GT	WASHER,FLAT,.625X2.25X.188,ZAG	4
3	1251565GT	WASHER,SHIM,1.56X2.5X.061,ZAG	8
4	1262832GT	FORMING, ENGINE MOUNT, RH	1
5	1256776GT	SCREW,HHF,M14-2.0X35,DIN6921,10.9,ZAB	5
6	1261920GT	FORMING, MOUNT, ENGINE, REAR	1
7	102045GT	ISOLATOR,ENGINE VIBRATION	4
8	1262833GT	FORMING, ENGINE MOUNT, LH	1
9	162207GT	FITTING,ELBOW,8GS-8FJX90S	2
10	162209GT	FITTING,CONN,16MM-8MJ	2
11	824091GT	SCREW, HHF, 3/8-16 X 1.25, 8, ZAG	4
12	1274322GT	NUT,NYLOCK FLG,3/8-16,F,ZAG	4
13	1261239GT	ASSY,FUEL PREFILTER,DEUTZ 2.9 includes head, filter and sensor cable	1
13-	1261240GT	CABLE,WIF SENSOR,DEUTZ 2.9	
13-	236260GT	PRE-FILTER,FUEL,DEUTZ TCD3.6	
13-	1261241GT	SEAL,WIF SENSOR,DEUTZ 2.9	
14	236259GT	LIFT PUMP,FUEL,DEUTZ TCD3.6	1
15	824215GT	SCREW, PHPM, 10-32 X .75, ZAG	4
16	6178GT	NUT, NYLOCK, 10-32	4
17	1257961GT	WELDMENT, FUEL FILTER BRACKET	1
18	824078GT	SCREW,HHF,1/4-20X.75,8,ZAG	2
19	13268GT	CLAMP,0.75,#12 X 1/4,RUB CUSH	2
20	1277924GT	NUT,NYLOCK FLG,1/4-20,F,ZAG	2
21	1261236GT	ASSY,FUEL FILTER,DEUTZ 2.9	1
21-	214228GT	FILTER, DEUTZ 2.9, FUEL	
21-	1256482GT	KIT,MED PRES FUEL SUPPLY,D2.9	

520.1 Deutz 2.9L Turbo, View 5

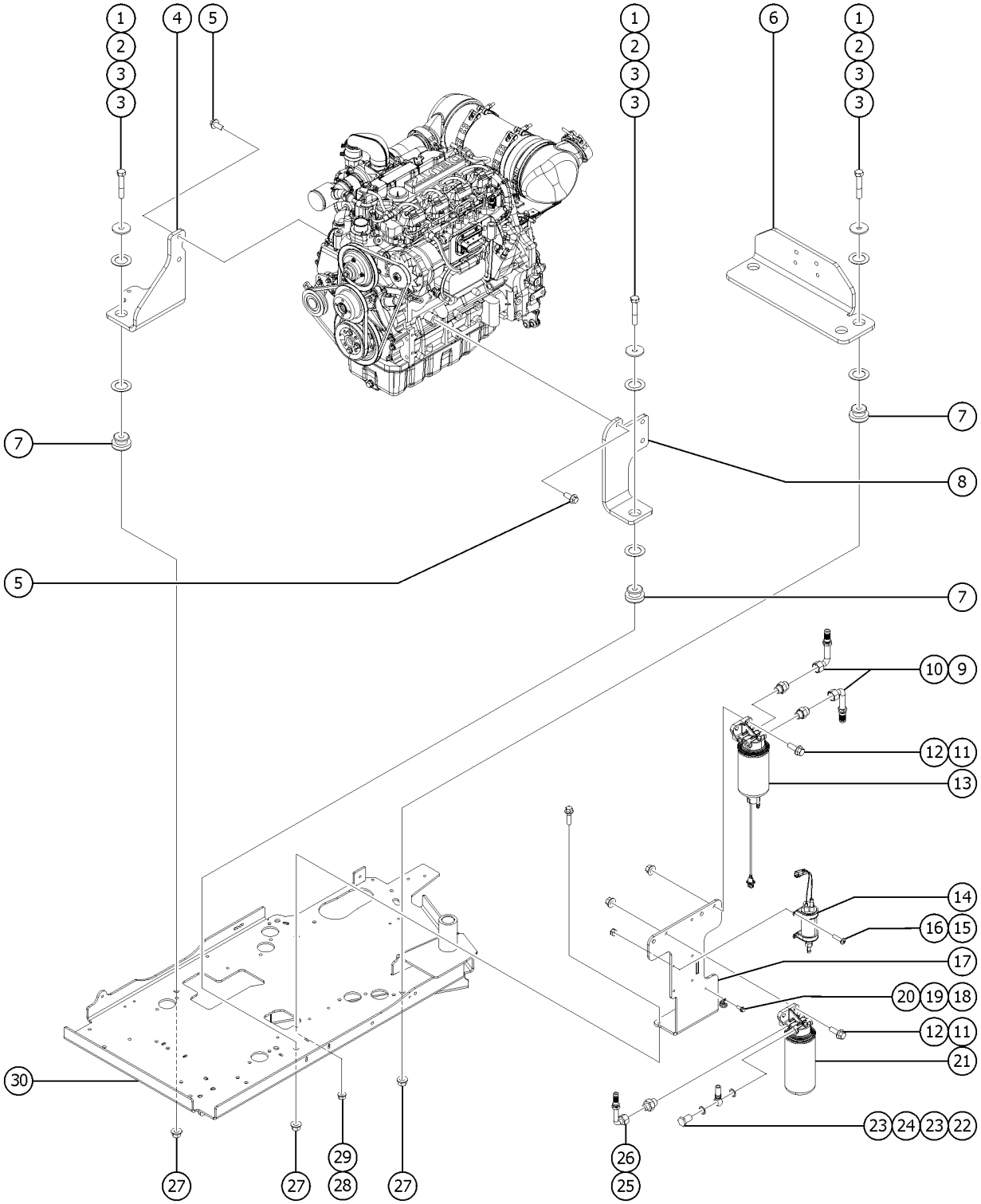

520.1 Deutz 2.9L Turbo, View 5

Item	Part No.	Description	Qty.
22	1255399GT	BOLT,BANJO,DEUTZ,QC	1
23	1255400GT	WASHER,COPPER,DEUTZ,QC	2
24	1255396GT	FITTING,FUEL,1/2,D2.9,QC	1
25	162206GT	FITTING,ELBOW,6GS-6FJX90S	1
26	162208GT	FITTING,CONN,16MM-6MJ	1
27	1283007GT	NUT,NYLOCK FLG,5/8-11,F,ZAG	4
28	1277924GT	NUT,NYLOCK FLG,1/4-20,F,ZAG	2
29	824079GT	SCREW,HHF,1/4-20X1,8,ZAG	2
30		Ref. WELDMENT, ENGINE TRAY refer to 528.1	

521.1 Perkins 404D-22, View 1

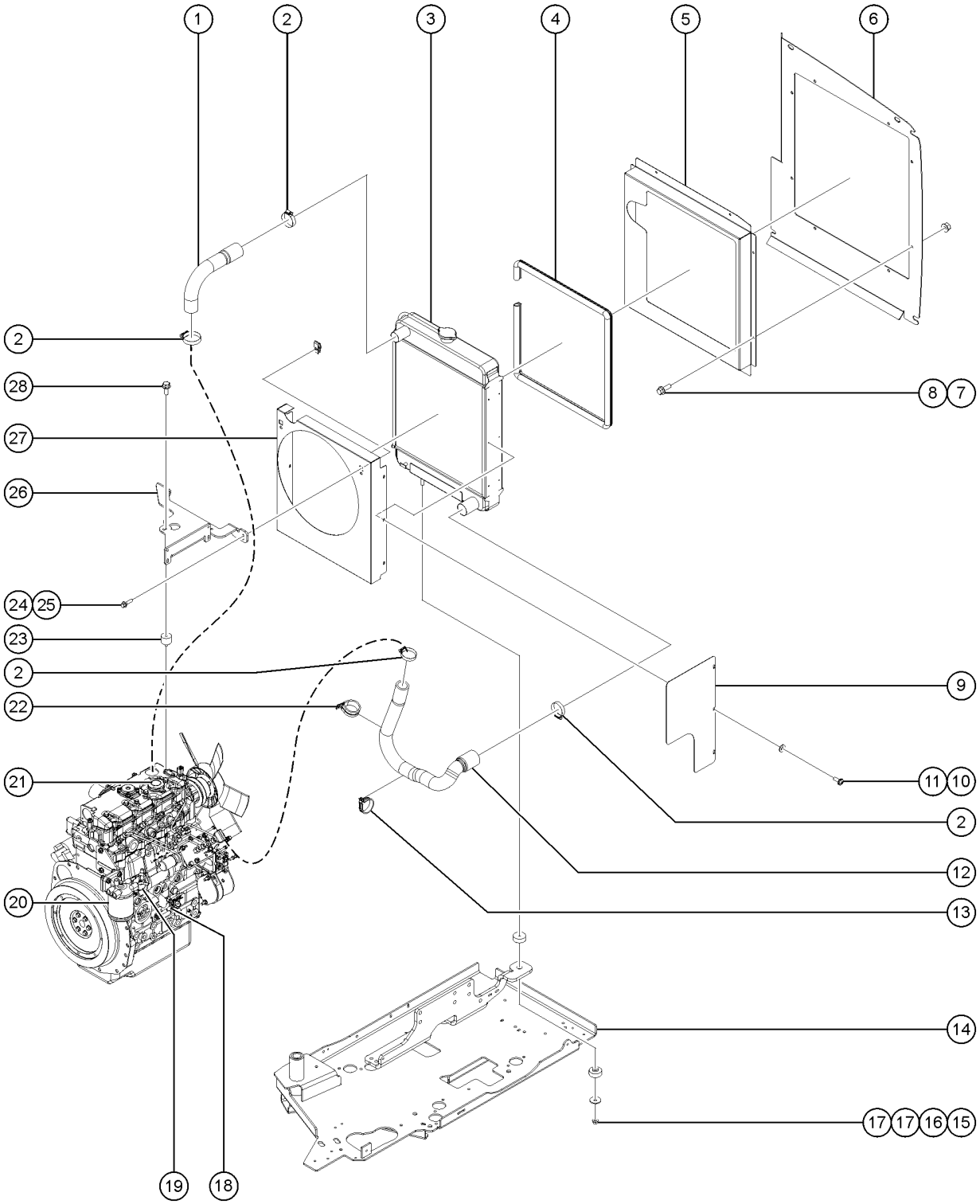

521.1 Perkins 404D-22, View 1

Item	Part No.	Description	Qty.
A		For internal engine parts, contact engine dealer	
B-	77736GT	GLOW PLUG (PERKINS 404-22)	
B-	128991GT	THERMOSTAT	
B-	147355GT	GASKET-THERMOSTAT HSG Engine block Thermostat	
B-	77477GT	GASKET,THERMOSTAT HSG Vertical Thermostat	
B-	94762GT	OIL FILTER - PERKINS	
1	54578GT	HOSE,UPPER RADIATOR,PERKINS	1
2	22672GT	CLAMP,HOSE,1.75	4
3	110304GT	RADIATOR,FORD/PERKINS***	1
4	1257836GT	TRIM SEAL,RADIATOR,PERKINS 404	1
5	106003GT	BAFFLE,PERKINS ENGINE	1
6	106172GT	BAFFLE,AIR INTAKE***	1
7	824078GT	SCREW,HHF,1/4-20X.75,8,ZAG	8
8	824027GT	NUT, TL FLG, 1/4-20, G, ZAG	8
9	54487GT	GUARD,FAN,FORD/PERKINS	1
10	824220GT	SCREW,PHPM SEMS ET,10-24X.5,ZA	6
11	1253185GT	WASHER,FLAT,#10,USS,ZAG	6
12	54579GT	HOSE,LOWER,RADIATOR,PERKINS	1
13	6653GT	CLAMP, 1.88, #30 X 1/4, RUB CUSH	1
14		REF. ENGINE TRAY refer to 528.1	
15	824029GT	NUT, TL FLG, 3/8-16, G, ZAG	2
16	824120GT	WASHER,FLAT,.375X1.50X.125,ZAG	2
17	24038GT	SHOCK MOUNT,SMALL	4
18	128984GT	DIPSTICK, STRAIGHT SHORT	1
18-	128985GT	DIPSTICK TUBE, STRAIGHT SH	
19	72348GT	PUMP,LIFT(FUEL) PERKINS(54555)	1
19-	77990GT	KIT,SEAL,3CC PUMP***	
20	1262484GT	FUEL FILTER ASSY,PERKINS 404D/	1

521.1 Perkins 404D-22, View 1

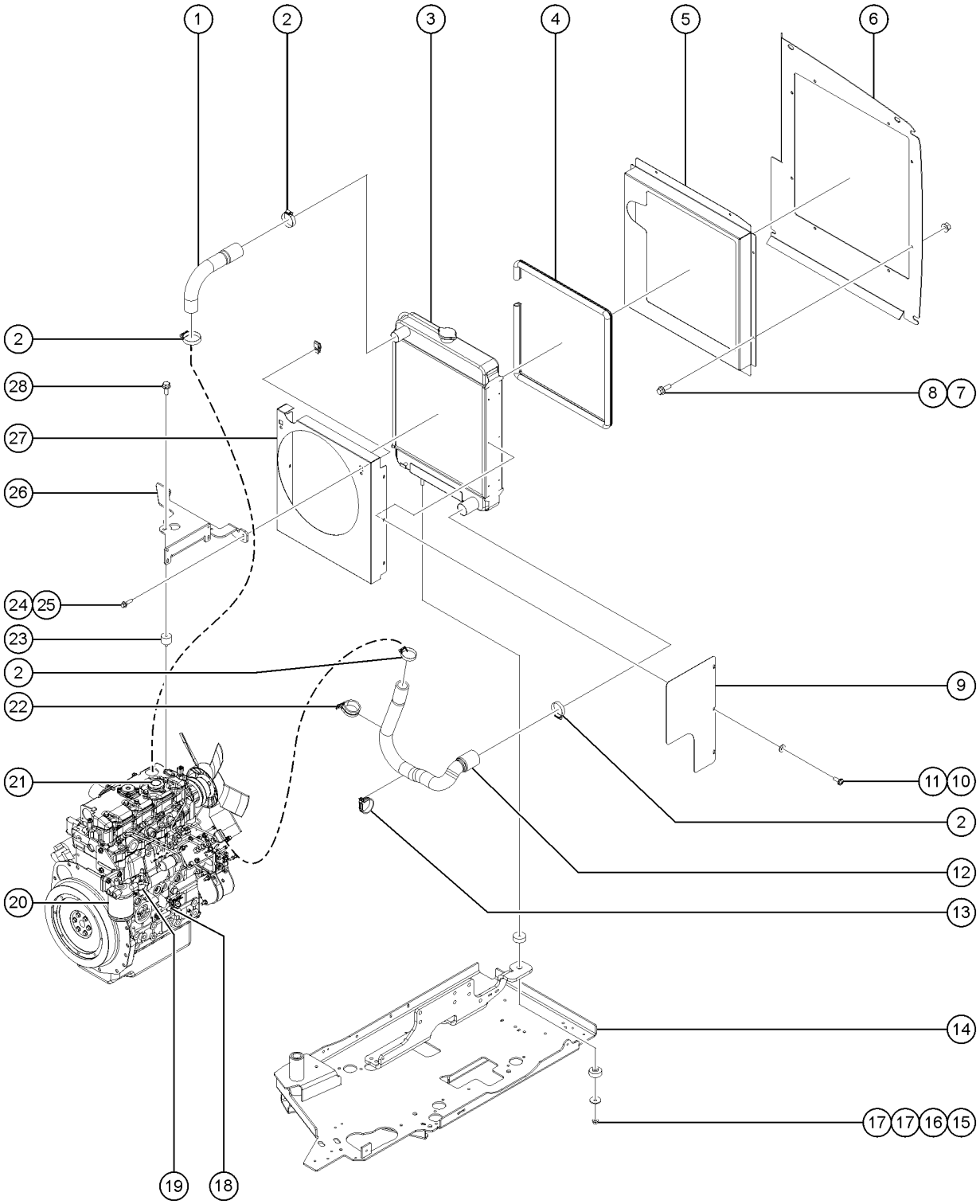

521.1 Perkins 404D-22, View 1

Item	*Part No.*	*Description*	*Qty.*
20-	62421GT	FILTER,FUEL,PERKINS	
21	65636GT	CAP, OIL FILLER	1
21-	65638GT	SEAL, OIL FILLER CAP	
22	39518GT	CLAMP,2.00,#32 X 3/8,RUB CUSH	1
23	60585GT	ISOLATOR,VIBRATION,M8 MALE/FEM	1
24	824079GT	SCREW,HHF,1/4-20X1,8,ZAG	2
25	56912GT	SPRING CLIP,1/4-20,.025-.15X.54,ZAG	2
26	88989GT	FORMING,UPPER RAD SUPPORT	1
27	88990GT	SHROUD,FAN	1
28	824132GT	SCREW,HHF,M8-1.25X20,DIN6921,10.9,ZAB	1

522.1 Perkins 404D-22, View 2

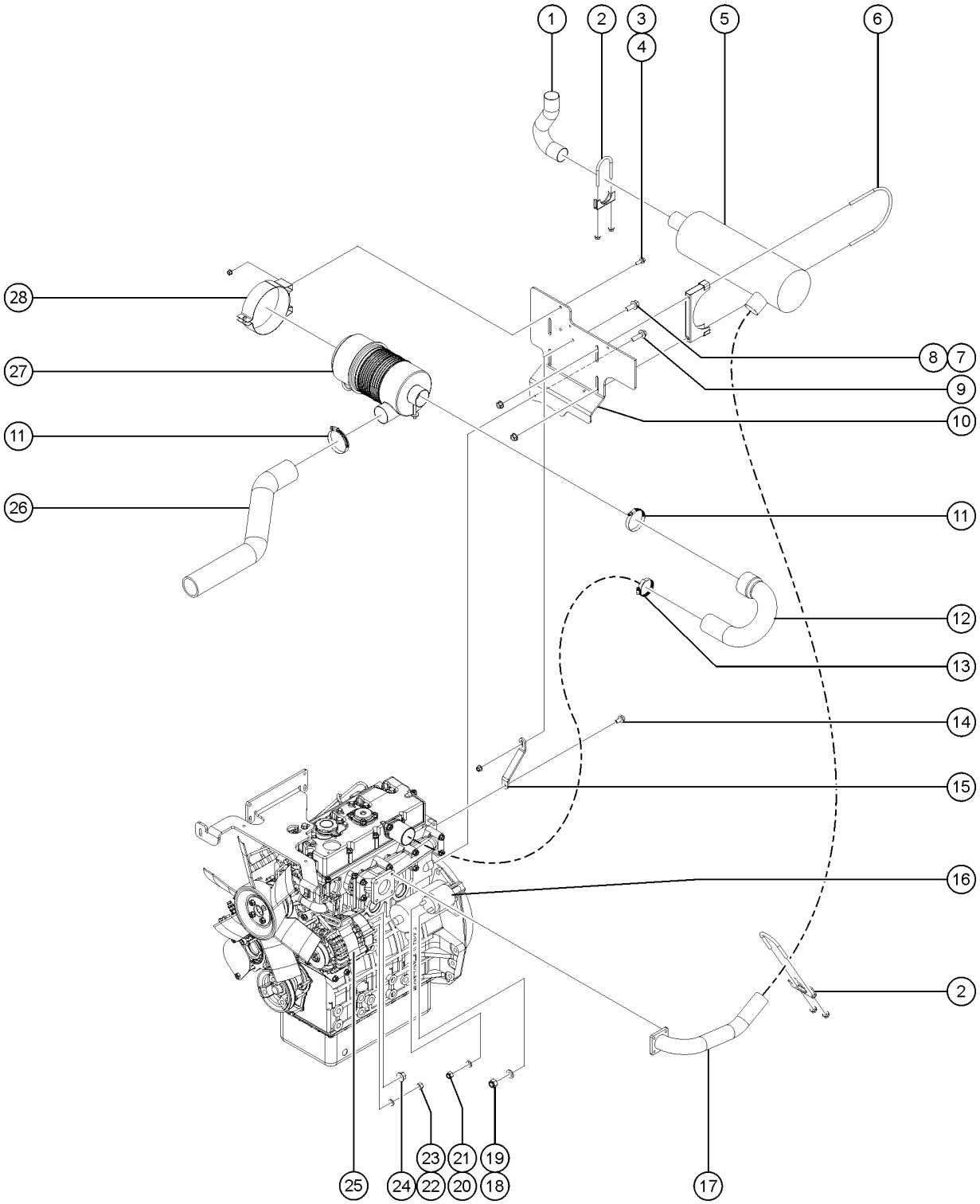

522.1 Perkins 404D-22, View 2

Item	Part No.	Description	Qty.
A		For internal engine parts, contact engine dealer	
1	822515GT	TAILPIPE, PERKINS, 404D	1
2	70385GT	CLAMP,EXHAUST,2.00 PLATED	2
3	824086GT	SCREW,HHF,5/16-18X1,8,ZAG	2
4	824028GT	NUT, TL FLG, 5/16-18, G, ZAG	2
5	88841GT	MUFFLER,6"	1
6	88993GT	CLAMP,MUFFLER	2
7	824090GT	SCREW,HHF,3/8-16X1,8,ZAG	1
8	824029GT	NUT, TL FLG, 3/8-16, G, ZAG	1
9	1257834GT	SCREW,HHF,M12-1.75X45,DIN6921,10.9,ZAB	2
10	88991GT	FORMING,MUFFLER MOUNT	1
11	30971GT	CLAMP,HOSE,3.00"	2
12	88847GT	HOSE,AIR CLEANER TO INTAKE	1
13	45435GT	CLAMP,HOSE,2.50"***	1
14	1251983GT	SCREW,HHF,M8-1.25X16,DIN6921,10.9,ZAB	1
15	88992GT	FORMING,MUFFLER SUPPORT	1
16	1262585GT	STARTER MOTOR,PERKINS 404D	1
17	110899GT	WELDMENT,EXHAUST PIPE	1
18	1283022GT	NUT,NYLOCK,M8-1.25,DIN985,10,ZAB	1
19	824144GT	WASHER,FLAT,M8,DIN125,ZAB	1
20	1283021GT	NUT,NYLOCK,M6-1.0,DIN985,10,ZAB	1
21	825355GT	WASHER,FLAT,M6,DIN125,ZAB	1
22	826214GT	NUT,TL,M5-0.8,DIN980,10,ZAB	2
23	826215GT	WASHER,FLAT,M5,DIN125,ZAB	2
24	231513GT	NUT,TL FLG,M6-1.0,DIN6927,10,ZAB	1
25	111029GT	ALTERNATOR,65 AMP,PERKINS 404	1
26	88846GT	HOSE,AIR INLET	1
27	63463GT	AIR CLEANER,NELSON***	1

522.1 Perkins 404D-22, View 2

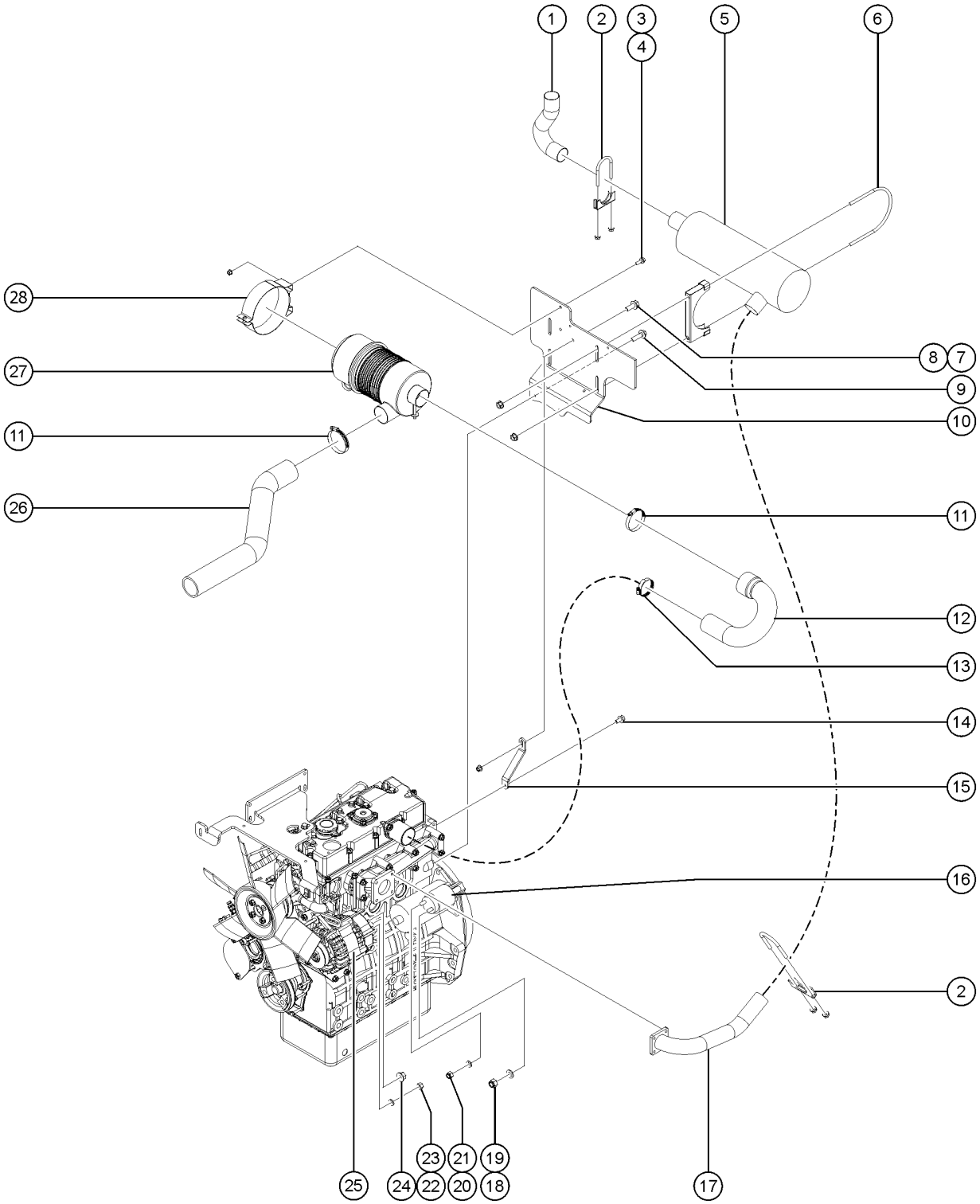

522.1 Perkins 404D-22, View 2

Item	*Part No.*	*Description*	*Qty.*
27-	62420GT	FILTER,AIR***	
27-	65810GT	BAFFLE, AIR CLEANER (27915)**	
27-	52866GT	EVACUATOR VALVE-AIR CLEANER	
28	53952GT	BRKT,AIR CLEANER ORIENTATION**	1

523.1 Perkins 404D-22, View 3

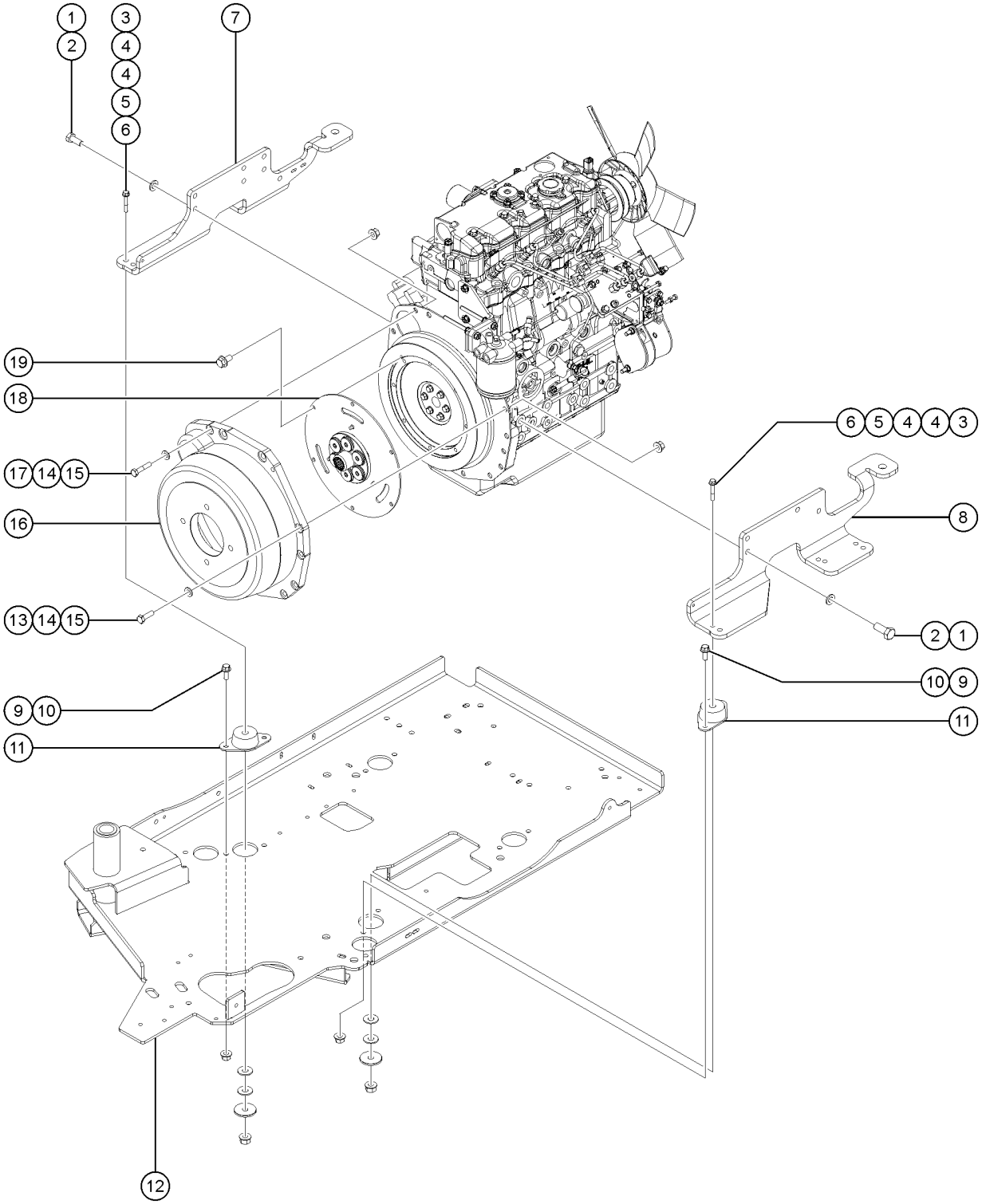

523.1 Perkins 404D-22, View 3

Item	Part No.	Description	Qty.
A		For internal engine parts, contact engine dealer	
1	1257705GT	SCREW,HHC,M14-1.5X35,DIN961,10	10
2	1257810GT	WASHER,FLAT,M14,DIN6916,HRD,ZAB	10
3	1251994GT	SCREW,HHF,1/2-13X3,8,ZAG	4
4	1255760GT	WASHER,FLAT,1/2,USS,ZAG	8
5	1256283GT	WASHER,FLAT,.5X2.25X.188,ZAG	4
6	1251997GT	NUT,TL FLG,1/2-13,G,ZAG	4
7	161611GT	FORMING, ENGINE MOUNT, PERKINS	1
8	88988GT	FORMING,ENGINE MOUNT RH	1
9	824090GT	SCREW,HHF,3/8-16X1,8,ZAG	8
10	1274322GT	NUT,NYLOCK FLG,3/8-16,F,ZAG	8
11	70452GT	ISOLATOR,ENGINE VIBRATION***	4
12		REF. ENGINE TRAY refer to 528.1	
13	1257776GT	SCREW,HHC,M10-1.5X35,DIN933,10.9,ZAB	3
14	824145GT	WASHER, FLAT, DIN125, M10, ZAB	4
15	231529GT	NUT,TL FLG,M10-1.5,DIN6927,10	4
16	89771GT	HOUSING,PUMP MOUNT (54573)	1
16B	128022GT	KIT,FBA STYLE COUPLER,PERKINS includes 15-tooth coupler (128003), fastener kit (1263209) and grease	
17	1257707GT	SCREW,HHC,M10-1.5X50,DIN931,10	2
18	128003GT	COUPLER,15 TOOTH,FBA,PERKINS**	1
19	1251983GT	SCREW,HHF,M8-1.25X16,DIN6921,10.9,ZAB	6

524.1 Perkins 404D-22, View 4

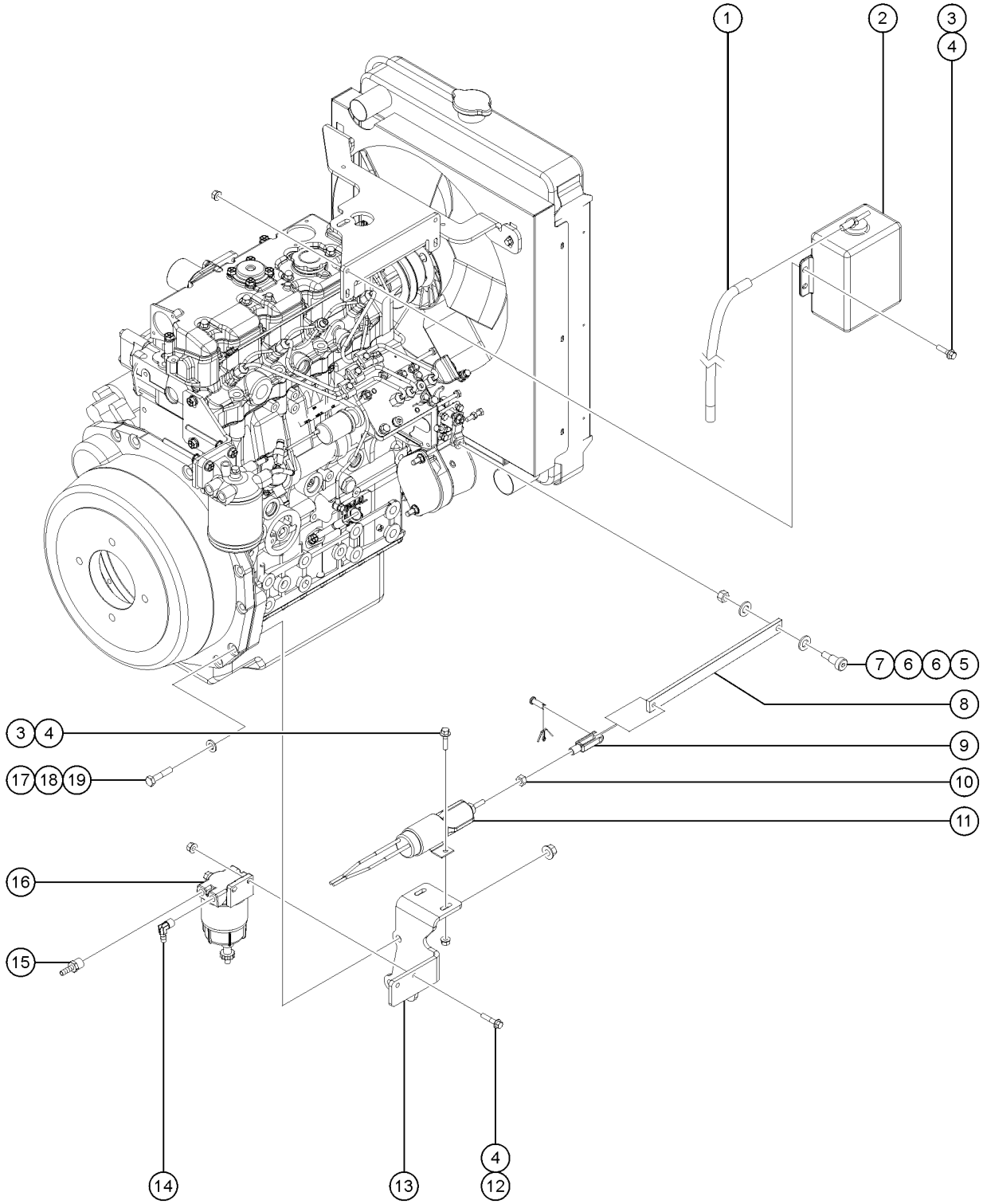

Item	Part No.	Description	Qty.
A		For internal engine parts, contact engine dealer	
1	106226GT	TUBING,VINYL,1/2" CLEAR	1
2	70367GT	BOTTLE,COOLANT RECOVERY,3.7***	1
3	824079GT	SCREW,HHF,1/4-20X1,8,ZAG	8
4	824027GT	NUT, TL FLG, 1/4-20, G, ZAG	8
5	1258824GT	BOLT,SHS,8X12XM6-1.0,ISO7379,12.9,ZAB	1
6	824144GT	WASHER,FLAT,M8,DIN125,ZAB	2
7	1256455GT	NUT,TL,M6-1.0,DIN980,10,ZAB	1
8	89953GT	FLATBAR,ALUM,THROTTLE LINKAGE	1
9	21130GT	CLEVIS YOKE-1/4-28,PLTD W/PIN	1
10	824041GT	NUT, 1/4-28, 8, ZAG	1
11	77402GT	SOLENOID,THROTTLE ACTUATOR DSL	1
12	824080GT	SCREW, HHF, 1/4-20 X 1.25, 8, ZAG	2
13	128588GT	FORMING,SOLENOID MOUNT	1
14	54205GT	HOSE END,BARB,1/4 MNPTX5/16,90	1
15	54437GT	HOSE END,BARB,1/4 MNPTX5/16,ST	1
16	147826GT	SEPRTR/FLTR,FUEL DSL,15GPH,.30	1
16-	62433GT	FILTER,ELEMENT,30 MIC,75020 (included with filter assembly)	
17	1257706GT	SCREW,HHC,M10-1.5X70,DIN931,10	4
18	824145GT	WASHER, FLAT, DIN125, M10, ZAB	4
19	231529GT	NUT,TL FLG,M10-1.5,DIN6927,10	4

525.1 Perkins 404F-22, View 1

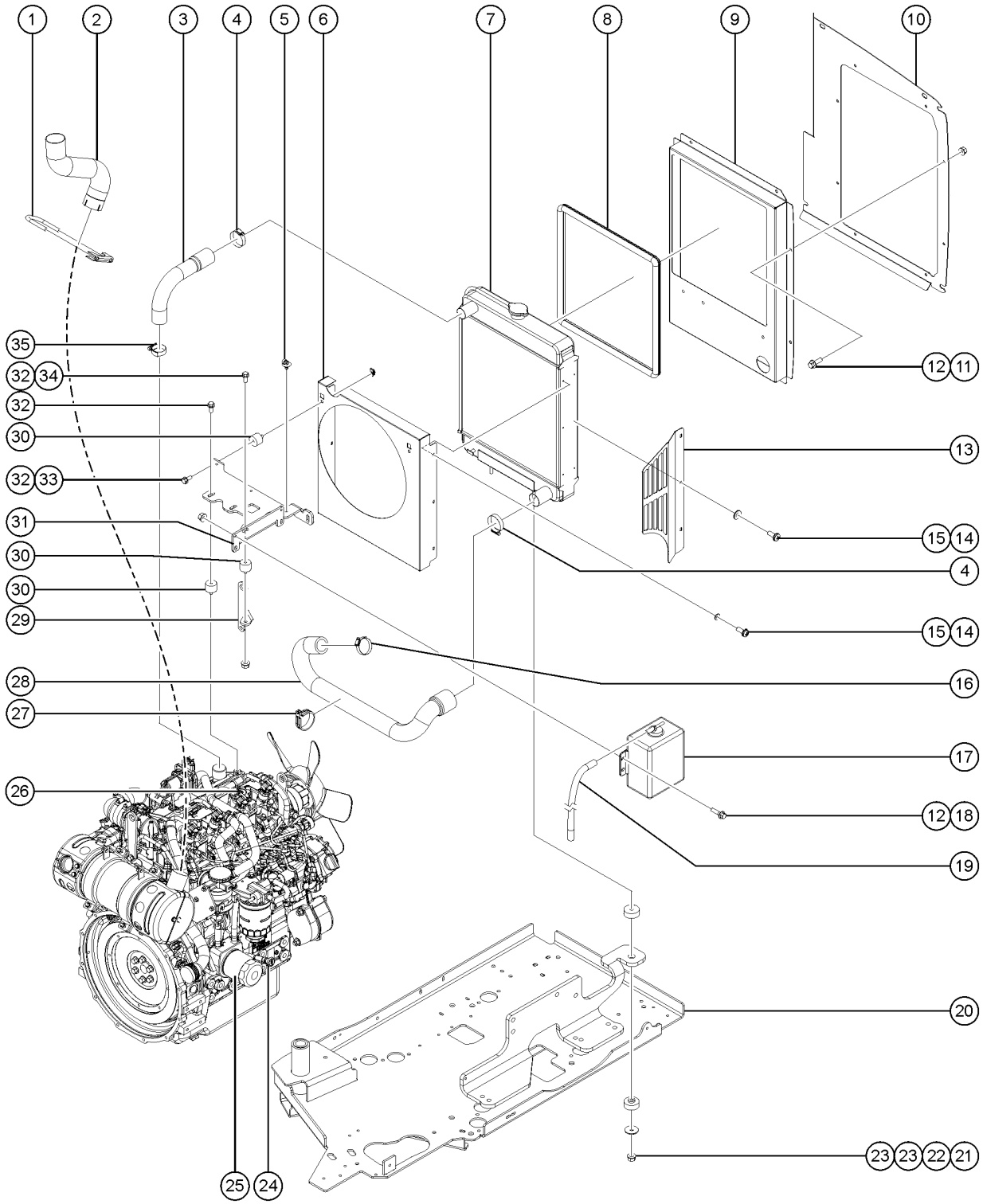

525.1 Perkins 404F-22, View 1

Item	Part No.	Description	Qty.
A-		Due to Tier 4 regulations, many engine replacement parts require the engine serial number at time of order placement. When ordering engine parts please have both machine and engine serial numbers available. For internal engine parts, contact engine dealer	
B-	1252940GT	STARTER,PERKINS 404F	1
B-	1252942GT	PUMP,WATER,PERKINS 404F	1
B-	77482GT	PULLEY, WATER PUMP	1
B-	1251819GT	GASKET,EXHAUST MANIFOLD,PERK	1
B-	128991GT	THERMOSTAT	1
B-	147355GT	GASKET-THERMOSTAT HSG Engine block Thermostat	
B-	77477GT	GASKET,THERMOSTAT HSG Vertical Thermostat	
1	102121GT	CLAMP,MUFFLER,1-7/8 IN.	1
2	1283125GT	TAILPIPE, MUFFLER, PERKINS 404F-E22T	1
3	54578GT	HOSE,UPPER RADIATOR,PERKINS	1
4	22672GT	CLAMP,HOSE,1.75	2
5	110149GT	CABLE TIE,DFT MOUNT,BLK,6.5"	3
6	88990GT	SHROUD,FAN	1
7	110304GT	RADIATOR,FORD/PERKINS***	1
7-	65473GT	CAP,RADIATOR,PERKINS/FORD	
8	1257685GT	TRIM SEAL,RADIATOR,PERKINS	1
9	822697GT	SHROUD, RADIATOR, 404F-22	1
10	822695GT	BAFFLE, AIR INTAKE, S60	1
11	824078GT	SCREW,HHF,1/4-20X.75,8,ZAG	8
12	824027GT	NUT, TL FLG, 1/4-20, G, ZAG	12
13	215917GT	NUT,SERRATED,5/16-18,8,ZAG	1
14	824220GT	SCREW,PHPM SEMS ET,10-24X.5,ZA	9
15	1253185GT	WASHER,FLAT,#10,USS,ZAG	9
16	35434GT	CLAMP,HOSE,2.00***	1
17	70367GT	BOTTLE,COOLANT RECOVERY,3.7***	1
18	824079GT	SCREW,HHF,1/4-20X1,8,ZAG	4

525.1 Perkins 404F-22, View 1

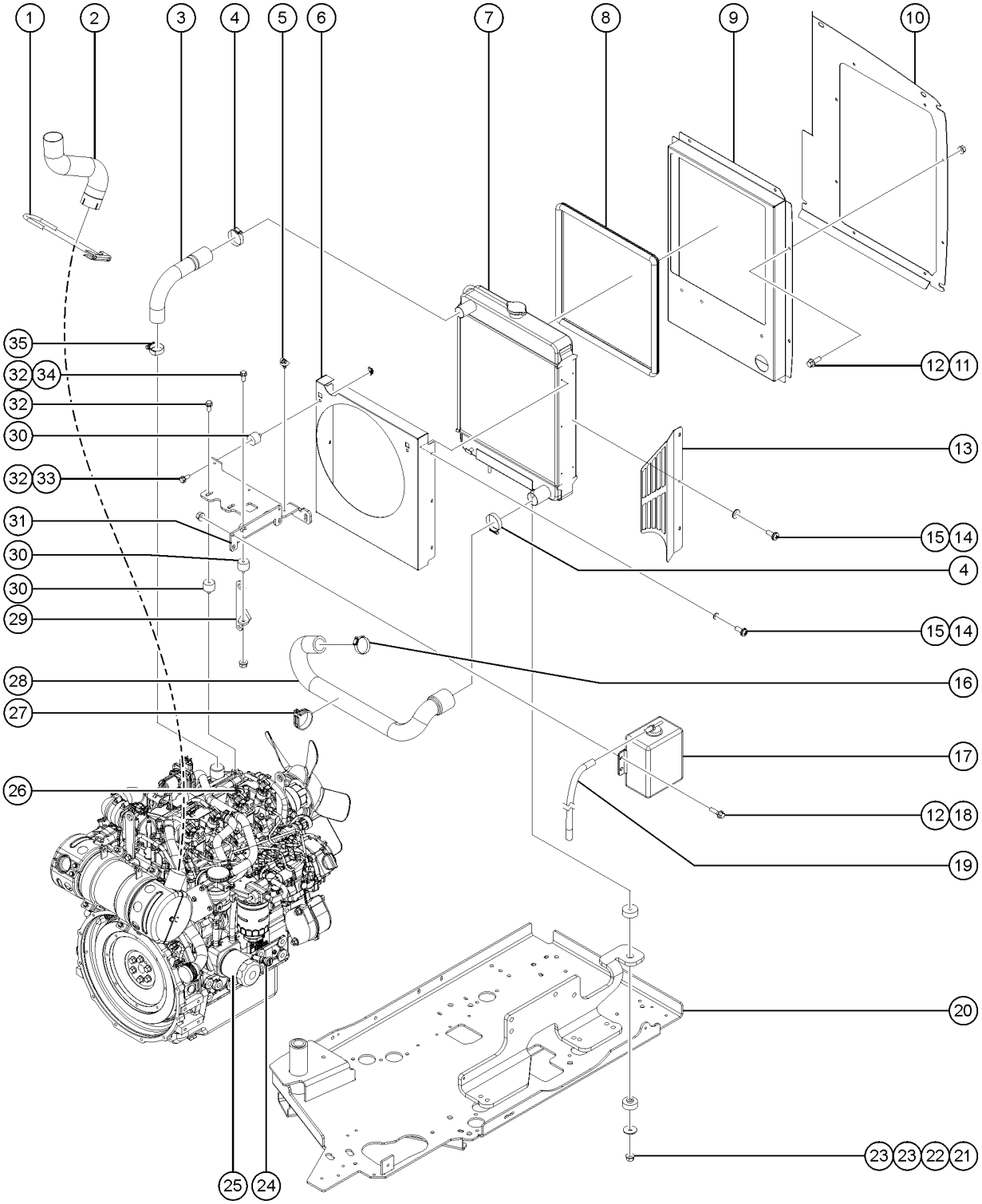

525.1 Perkins 404F-22, View 1

Item	Part No.	Description	Qty.
19	106226GT	TUBING,VINYL,1/2" CLEAR	1
20		REF. ENGINE TRAY refer to 528.1	
21	824029GT	NUT, TL FLG, 3/8-16, G, ZAG	2
22	824120GT	WASHER,FLAT,.375X1.50X.125,ZAG	2
23	24038GT	SHOCK MOUNT,SMALL	4
24	128984GT	DIPSTICK, STRAIGHT SHORT	1
24-	128985GT	DIPSTICK TUBE, STRAIGHT SH	
25	94762GT	OIL FILTER - PERKINS	1
26	65636GT	CAP, OIL FILLER	1
26-	65638GT	SEAL, OIL FILLER CAP	
27	6653GT	CLAMP, 1.88, #30 X 1/4, RUB CUSH	1
28	1283181GT	HOSE,LOWER RADIATOR,PERKINS 404F-E22T	1
29	1284549GT	FORMING,UPPER RADIATOR SUPPORT/ENGINE LIFT POINT, 404F-E22T	1
30	60585GT	ISOLATOR,VIBRATION,M8 MALE/FEM	5
31	1284548GT	FORMING,UPPER RADIATOR SUPPORT,PERKINS 404F-E22T	1
32	824132GT	SCREW,HHF,M8-1.25X20,DIN6921,10.9,ZAB	5
33	230820GT	SPRING CLIP, M8-1.25, 0.8-4.0 X 13, ZAB	2
34	237832GT	NUT,TL FLG,M8-1.25,DIN6927,10,ZAB	1
35	119053GT	CLAMP,HOSE,1.50	1

526.1 Perkins 404F-22, View 2

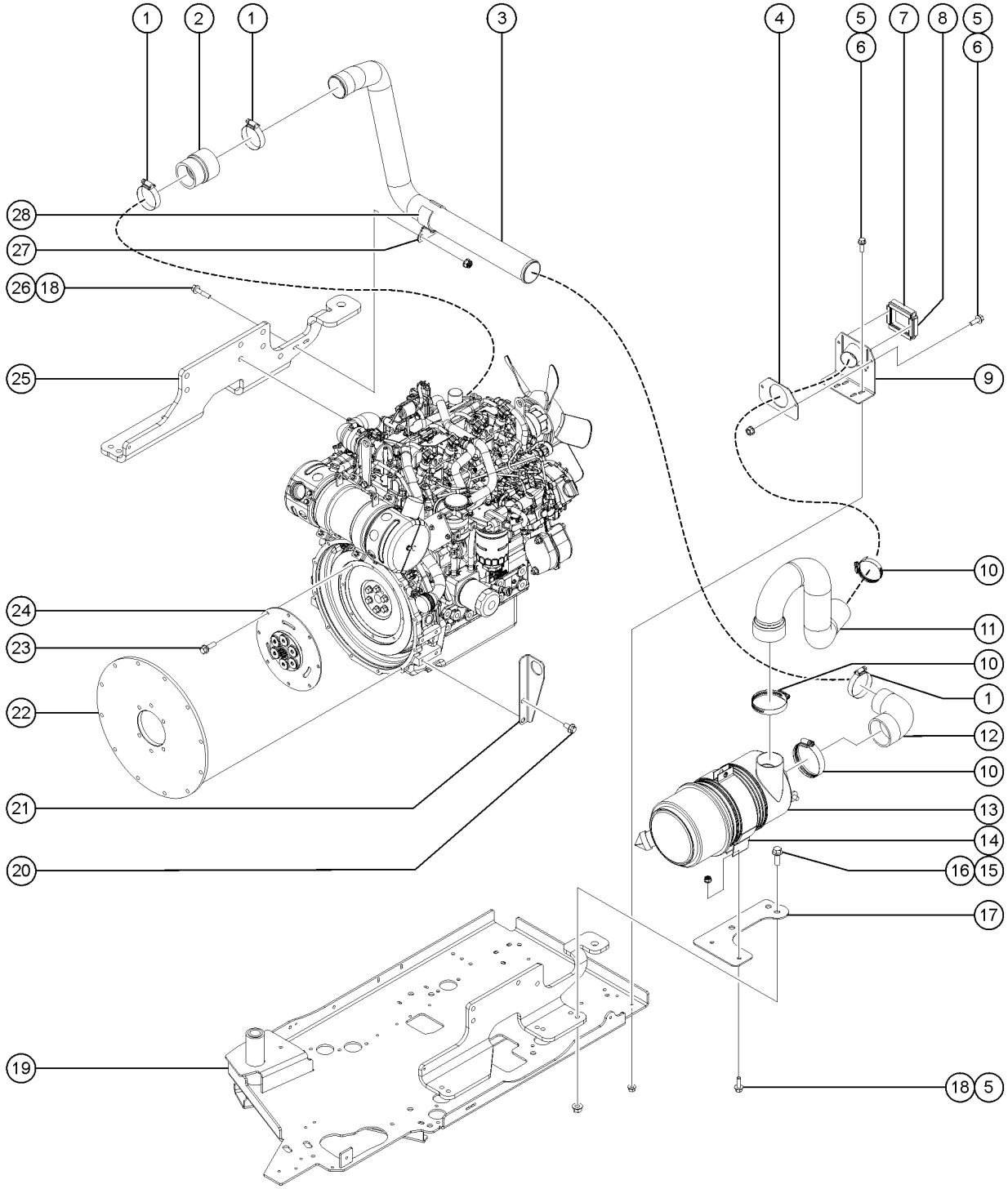

526.1 Perkins 404F-22, View 2

Item	Part No.	Description	Qty.
A		Due to Tier 4 regulations, many engine replacement parts require the engine serialnumber at time of order placement. When ordering engine parts please have both machine and engine serial numbers available. For internal engine parts, contact engine dealer	
B	1297346GT	ASSEMBLY, PREFILTER, FUEL, PERKINS	1
B-	1291205GT	FILTER, PRIMARY, FUEL, PERKINS	
1	35434GT	CLAMP,HOSE,2.00***	3
2	1253487GT	ADAPTER, 2" TO 1.8", PERK 404F	1
3	1283168GT	TUBE, INTAKE AIR PIPE, PERKINS 404F-E22T	1
4	1253990GT	SHEET,AIR SEAL BACKING	1
5	824078GT	SCREW,HHF,1/4-20X.75,8,ZAG	6
6	824027GT	NUT, TL FLG, 1/4-20, G, ZAG	4
7	1257736GT	SEAL,AIR INTAKE ADAPTER	2
8	1257737GT	SEAL,AIR INTAKE ADAPTER,SIDE	2
9	1254017GT	WDMT,INTAKE ADAPTER,404F	1
10	45435GT	CLAMP,HOSE,2.50"***	3
11	215912GT	COLD AIR HOSE, PERK 404F-22	1
12	1287116GT	ADAPTER, ELBOW, 2IN X 2.5IN	1
13	63463GT	AIR CLEANER,NELSON***	1
13-	52866GT	EVACUATOR VALVE-AIR CLEANER	
13-	58415GT	CLIP,AIR CLEANER END CAP***	
13-	62420GT	FILTER,AIR*** end cap not available separately	
13-	65810GT	BAFFLE, AIR CLEANER (27915)**	
14	53952GT	BRKT,AIR CLEANER ORIENTATION**	1
15	1253498GT	SCREW,HHF,1/2-13X1.5,8,ZAG	1
16	1274172GT	NUT,NYLOCK FLG,1/2-13,G,ZAG	1
17	215472GT	PLATE, AIR CLEANER, 404F-22	1
18	1277924GT	NUT,NYLOCK FLG,1/4-20,F,ZAG	4
19		REF. ENGINE TRAY refer to 528.1	
20	231087GT	SCREW,HHF,M12-1.75X25,DIN6921,10.9,ZAB	2

526.1 Perkins 404F-22, View 2

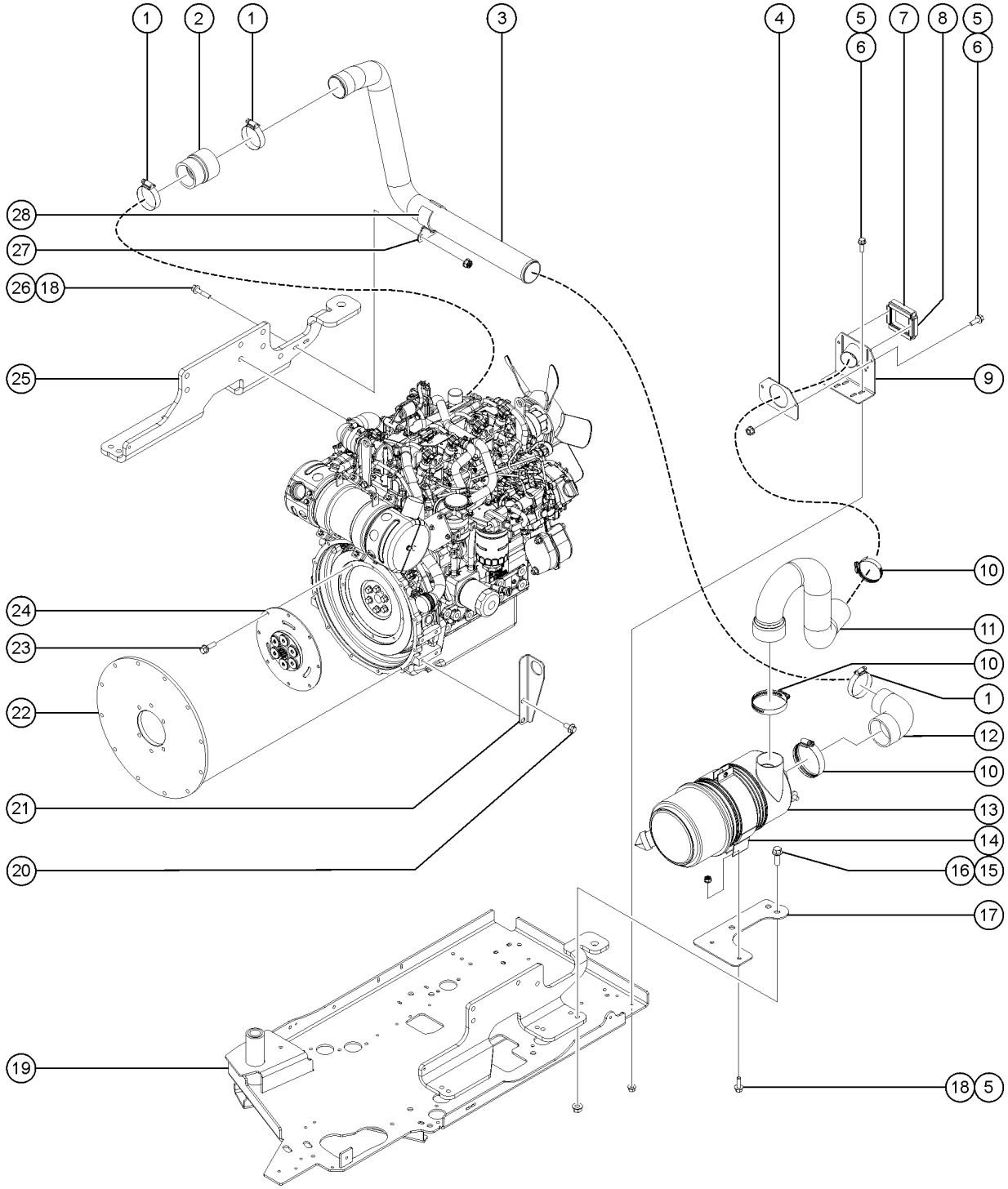

526.1 Perkins 404F-22, View 2

Item	*Part No.*	*Description*	*Qty.*
21	1286546GT	ECU HARNESS BRACKET, PERKINS 404F-E22T	1
22	1283182GT	PUMP MOUNT, PERKINS 404F-E22T	1
23	824086GT	SCREW,HHF,5/16-18X1,8,ZAG	8
24	1283279GT	COUPLER,15 TOOTH,FBA,PERKINS 404F-E22T	1
25		REF. FORMING ENGINE MOUNT refer to 525.1	
26	824080GT	SCREW, HHF, 1/4-20 X 1.25, 8, ZAG	2
27	1287139GT	FORMING, PIPE SUPPORT	1
28	1287140GT	RUBBER, PIPE CUSHION	1
28-	35434GT	CLAMP,HOSE,2.00***	1

527.1 Perkins 404F-22, View 3

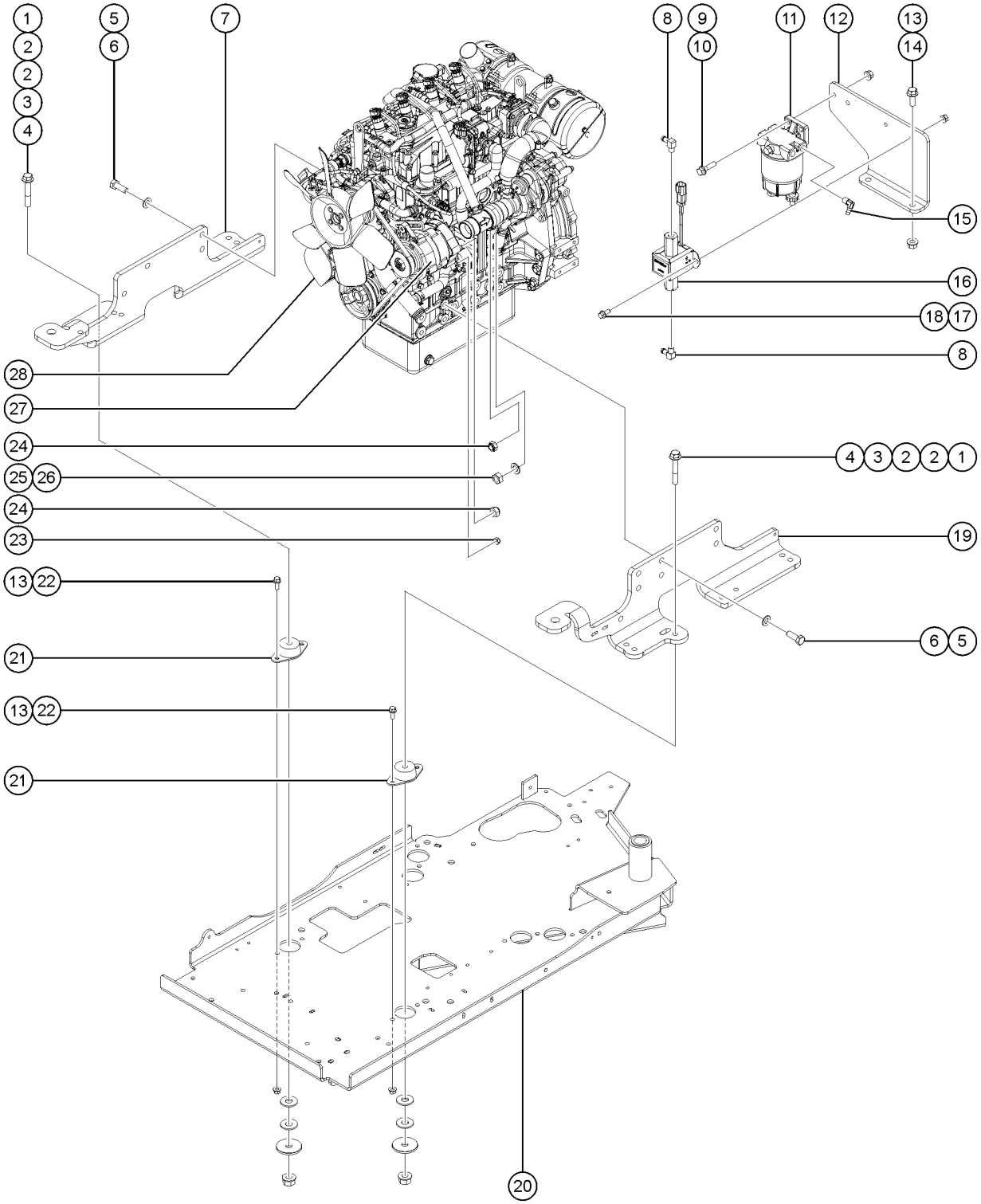

527.1 Perkins 404F-22, View 3

Item	Part No.	Description	Qty.
A		Due to Tier 4 regulations, many engine replacement parts require the engine serialnumber at time of order placement. When ordering engine parts please have both machine and engine serial numbers available. For internal engine parts, contact engine dealer	
1	1251994GT	SCREW,HHF,1/2-13X3,8,ZAG	4
2	1255760GT	WASHER,FLAT,1/2,USS,ZAG	8
3	1256283GT	WASHER,FLAT,.5X2.25X.188,ZAG	4
4	1274172GT	NUT,NYLOCK FLG,1/2-13,G,ZAG	4
5	1257705GT	SCREW,HHC,M14-1.5X35,DIN961,10	10
6	1257810GT	WASHER,FLAT,M14,DIN6916,HRD,ZAB	10
7	88988GT	FORMING,ENGINE MOUNT RH	1
8	38922GT	ELBOW,90DEG.1/8MPT-5/16 BARB	2
8-	21465GT	CLAMP,HOSE,.25" - .63" X .3125	
9	824087GT	SCREW, HHF, 5/16-18 X 1.25, 8, ZAG	2
10	824028GT	NUT, TL FLG, 5/16-18, G, ZAG	2
11	75020GT	SEPRTR/FLTR,FUEL DSL,15GPH,.30	1
11-	62433GT	FILTER,ELEMENT,30 MIC,75020	
12	1285224GT	BRACKET, FUEL PUMP, PERKINS 404F-E22T	1
13	824090GT	SCREW,HHF,3/8-16X1,8,ZAG	10
14	824029GT	NUT, TL FLG, 3/8-16, G, ZAG	2
15	54205GT	HOSE END,BARB,1/4 MNPTX5/16,90	2
15-	21465GT	CLAMP,HOSE,.25" - .63" X .3125	
16	1285222GT	FUEL PUMP,LIFT,PERKINS 404F-E22T	1
17	1256855GT	SCREW,HHF,1/4-20X.625,8,ZAG	2
18	824027GT	NUT, TL FLG, 1/4-20, G, ZAG	2
19	161611GT	FORMING, ENGINE MOUNT, PERKINS	1
20		REF. ENGINE TRAY refer to 528.1	
21	70452GT	ISOLATOR,ENGINE VIBRATION***	4
22	1274322GT	NUT,NYLOCK FLG,3/8-16,F,ZAG	8
23	27082GT	NUT,NYLOCK,M5X.80	2

527.1 Perkins 404F-22, View 3

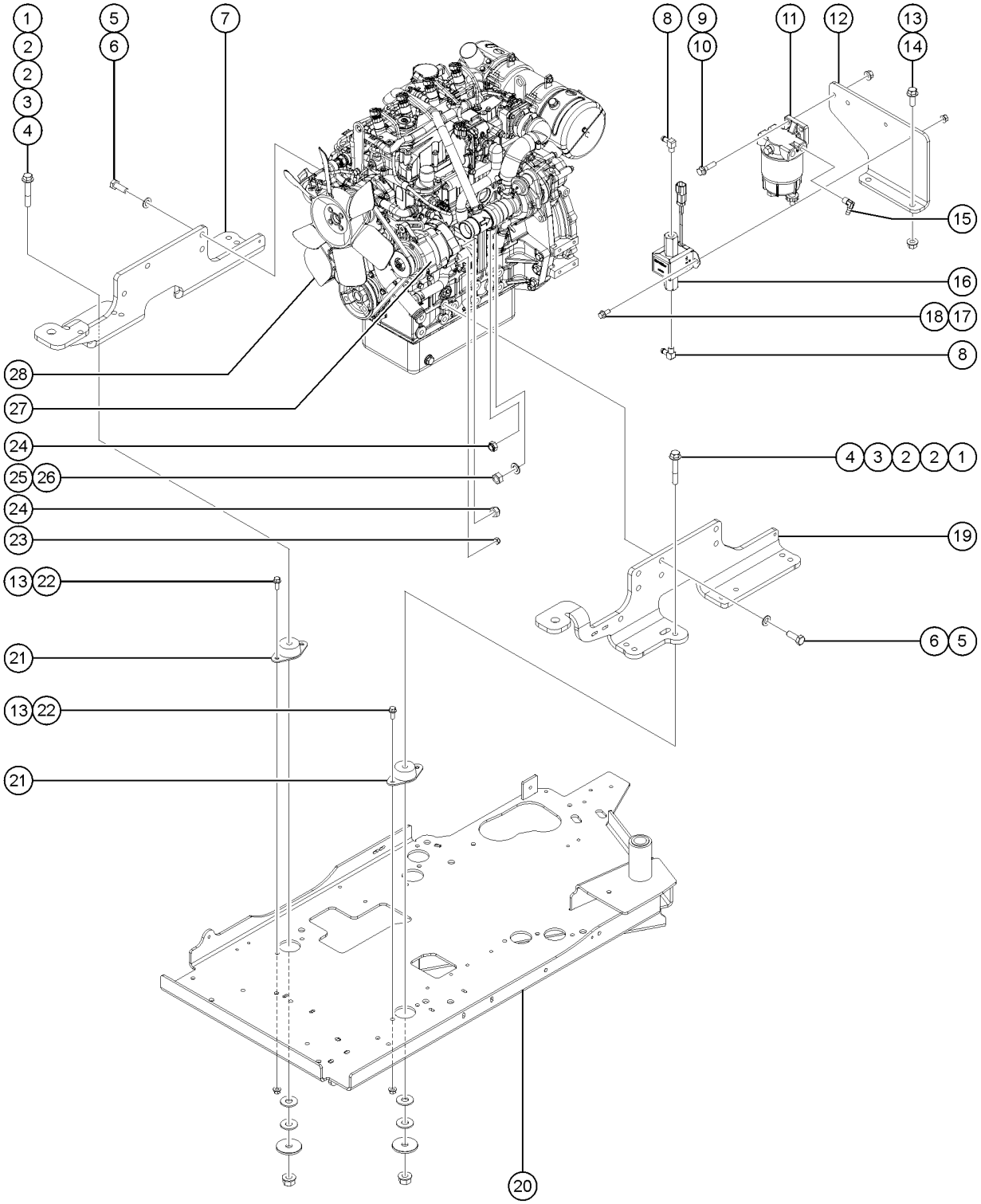

527.1 Perkins 404F-22, View 3

Item	*Part No.*	*Description*	*Qty.*
24	49364GT	NUT,NYLOCK,M6X1.00	2
25	22571GT	NUT,HEX,M8 X 1.25	1
26	33277GT	WASHER,FLAT,M8,YELLOW ZINC	1
27	1251814GT	ALTERNATOR - 85 AMP, INT REGU	1
28	77483GT	FAN, ENGINE (104-22)(404-22)*	1
28-	1252943GT	SPACER,FAN,PERKINS 404F	

528.1 Engine Tray

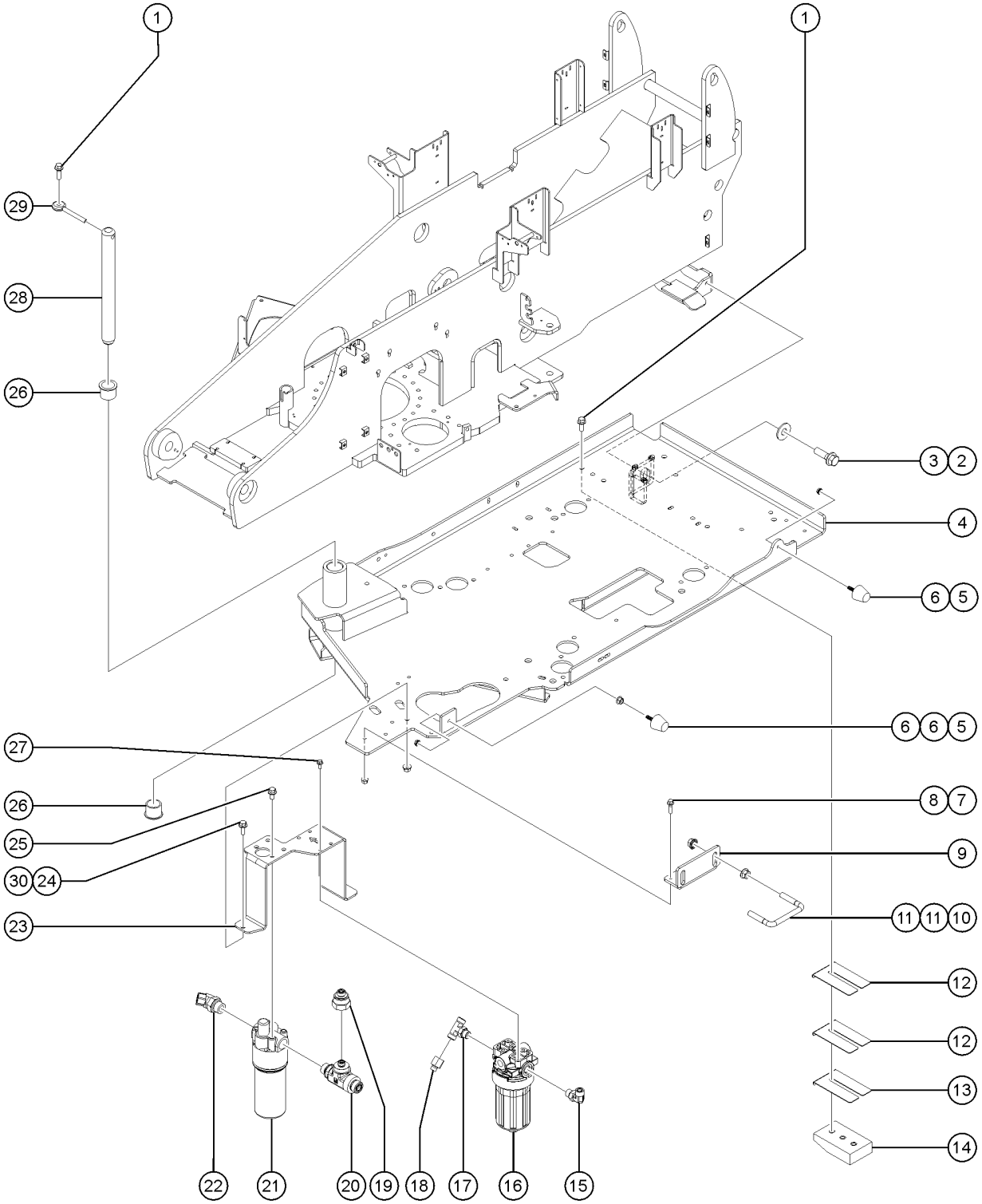

528.1 Engine Tray

Item	Part No.	Description	Qty.
1	824091GT	SCREW, HHF, 3/8-16 X 1.25, 8, ZAG	3
2	1256126GT	SCREW,HHF,5/8-11X2,8,ZAG	1
3	824115GT	WASHER, FLAT, USS, 5/8, ZAG	1
4	1283145GT	WELDMENT, ENGINE TRAY WITH BEARINGS	1
5	1261277GT	RUBBER BUMPER, 1.25 X 1.25 IN	2
6	1255805GT	NUT,SERRATED,5/16-18,8,ZAG	3
7	824079GT	SCREW,HHF,1/4-20X1,8,ZAG	3
8	1277924GT	NUT,NYLOCK FLG,1/4-20,F,ZAG	3
9	1260174GT	FORMING, ENGINE TRAY LATCH	1
10	1259855GT	UBOLT, 0.4724 IN D X 4.0 IN L	1
11	1261724GT	NUT,SERRATED,1/2-13,8,ZAG	4
12	34344GT	SHIM,SIDE PAD 16GA. 3 X 5	2
13	38621GT	SHIM,PAD,5 X 3	1
14	81522GT	WEAR PAD,ENGINE TRAY	1
14-	48425GT	NUT,FLG-LRG,3/8-16,YZ	
15	48932GT	FITTING,ELBOW,90D,520220-8***	1
16	1267807GT	ASSEMBLY, MED. PRESS. FILTER, SAE8	1
16-	1268229GT	ELEMENT-5 MIC, PAPER, W/ BYPASS	
17	48936GT	TEE,BRANCH,520429-8	1
18	48941GT	REDUCER,520123-8-4	1
19	87033GT	REDUCER,520123-12-6	1
20	48961GT	TEE,RUN,520428-12	1
21	60334GT	FILTER ASSY,HIGH PRESS SAE-12*	1
21-	1279465GT	BACKUP RING,71.60X67.20X1.40PTFE(60334)	
21-	1279466GT	O-RING,67.95X2.62-NBR-70SH(HF2P)(60334)	
21-	58380GT	FILTER INDICATOR-(60334)	
21-	60857GT	FILTER,ELEMENT,BETA(5)=1000	
22	48963GT	FITTING,ELBOW,45D,520320-12***	1

528.1 Engine Tray

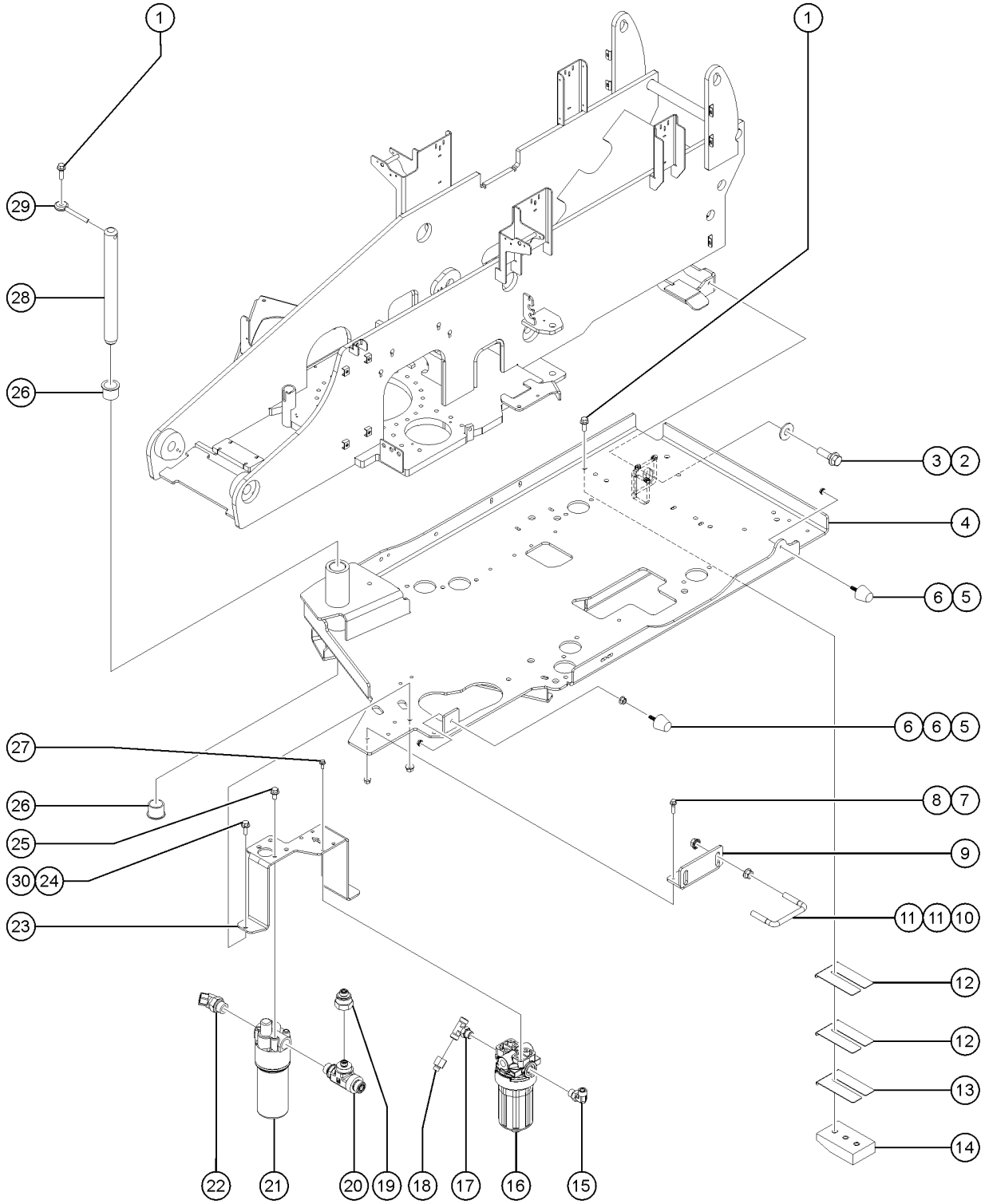

528.1 Engine Tray

Item	Part No.	Description	Qty.
23	1280862GT	FORMING, BRACKET, FILTER MOUNT	1
24	1274322GT	NUT,NYLOCK FLG,3/8-16,F,ZAG	2
25	824089GT	SCREW, HHF, 3/8-16 X .75, 8, ZAG	4
26	35675GT	BEARING,FL,1.25IDX1.5ODX1.25L	2
27	1256855GT	SCREW,HHF,1/4-20X.625,8,ZAG	4
28	81724GT	PIN,1.25 X 13.25 IN,CHAMFER	1
29	825019GT	ROD END, .375X3.69, ZAG	1
30	824090GT	SCREW,HHF,3/8-16X1,8,ZAG	2

601.1 Linkage Assembly - View 1

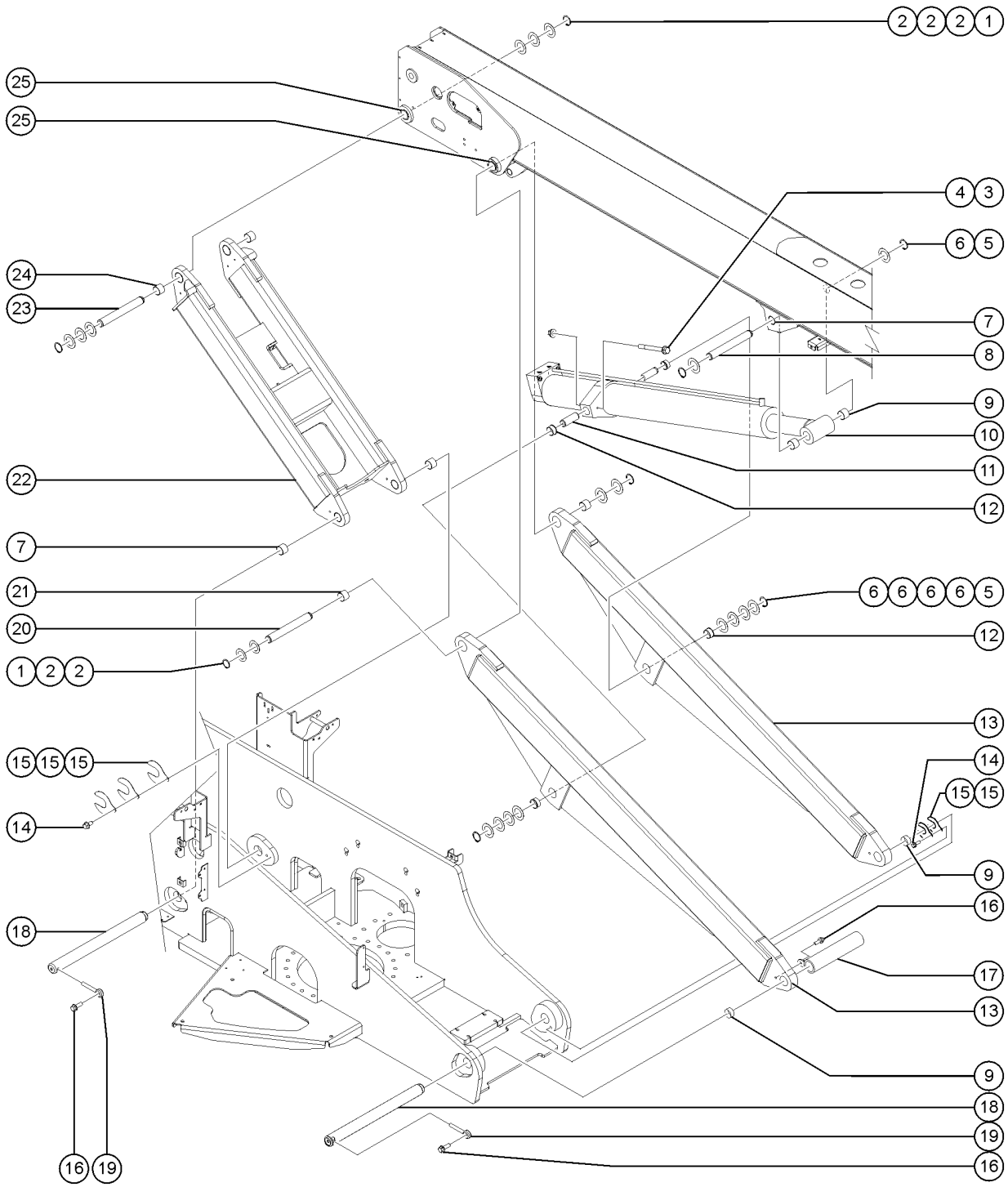

601.1 Linkage Assembly - View 1

Item	Part No.	Description	Qty.
1	1254639GT	SNAP RING,EXTERNAL,2.25,ZAG	4
2	1257080GT	WASHER,FLAT,2.27X3.5X.06,ZAG	10
3	1256107GT	SCREW,HHC,1/2-13X4.5,8,ZAG	2
4	1274172GT	NUT,NYLOCK FLG,1/2-13,G,ZAG	2
5	1253815GT	SNAP RING,EXTERNAL,2.00,ZAG	4
6	1256864GT	WASHER,FLAT,2.01X3.5X.06,ZAG	10
7	18720GT	BEARING,2.0IDX2.25ODX1.50L	4
8	88872GT	PIN,2.00DIAX11.26LG,2RING	1
9	42014GT	BEARING,2.00IDX2.25ODX2.00L	4
10	1276386GT	CYLINDER, LIFT, S60/65XC (inlcudes item 9)	1
10-	1281936GT	SEAL KIT, CYLINDER LIFT	
10-	1273414GT	VALVE,COUNTERBALANCE,CBCB-LHN 3500 V1, (Extend)	
10-	75064GT	VALVE, COUNTERBALANCE, CWCG-LGN.5000 V2, (Extend)	
10-	60984GT	VALVE COUNTERBAL.CBBD-LJN@5000 V3, (Retract)	
10-	42014GT	BEARING,2.00IDX2.25ODX2.00L	2
11	1276428GT	PIN, LIFT CYL, 2.00DIAX,5.1LG, 1 RING, 2 HOLES	2
12	1276424GT	BEARING,FL,2.00IDX2.25ODX.84L	4
13	1276504GT	ASSY,WELDMENT LONG LINK WITH BEARINGS S60/65-XC (includes items 9, 12 and 21)	2
13-	42014GT	BEARING,2.00IDX2.25ODX2.00L	
13-	1276424GT	BEARING,FL,2.00IDX2.25ODX.84L	
13-	106042GT	BEARING,2.25IDX2.50ODX2.00L	
14	824089GT	SCREW, HHF, 3/8-16 X .75, 8, ZAG	4
15	1262688GT	SHIM, HORSESHOE, 2.00	11
16	1253498GT	SCREW,HHF,1/2-13X1.5,8,ZAG	3
17	1276505GT	WELDMENT, LONG LINK SPACER S60/65-XC	1
18	88676GT	PIN,2.00DIAX24.00LG,CHAMFER***	2
19	1256267GT	ROD END,.5 X 3.75,ZAG	2
20	1276426GT	PIN,2.25 X 19.50LG, 2 RING	1

601.1 Linkage Assembly - View 1

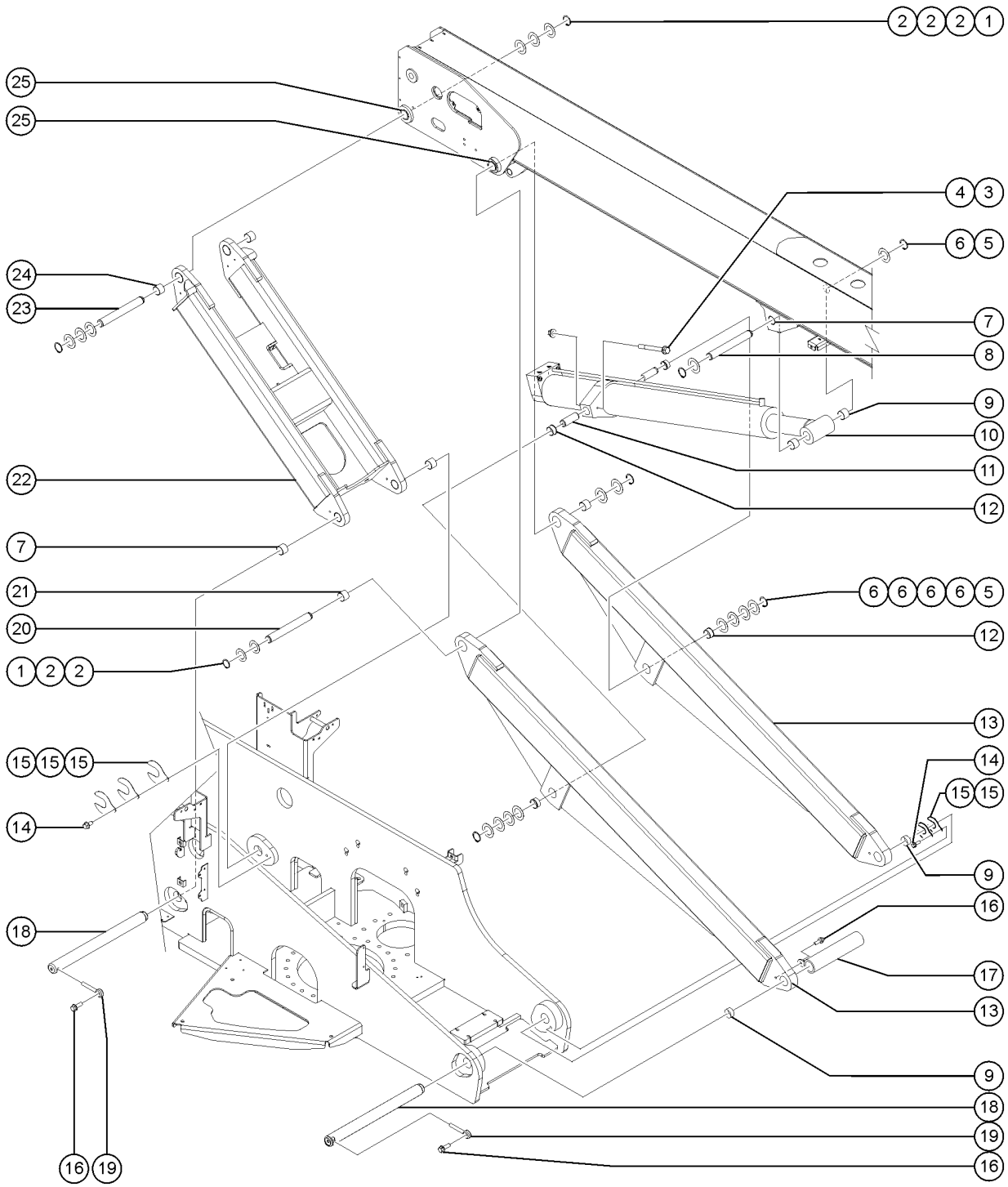

601.1 Linkage Assembly - View 1

Item	*Part No.*	*Description*	*Qty.*
21	106042GT	BEARING,2.25IDX2.50ODX2.00L	2
22	1309496GT	ASSY,WELDMENT SHORT LINK WITH BEARINGS, S60/65-XC (includes items 7 and 24)	1
22-	18720GT	BEARING,2.0IDX2.25ODX1.50L	2
22-	18722GT	BEARING,2.25IDX2.50ODX1.50L***	2
23	1276425GT	PIN,2.250 X 18.0,2 RINGS,2 HOLE	1
24	18722GT	BEARING,2.25IDX2.50ODX1.50L***	2
25	88919GT	BEARING,FL,2.25IDX2.50ODX1.63L	4

602.1 Linkage Assembly - View 2

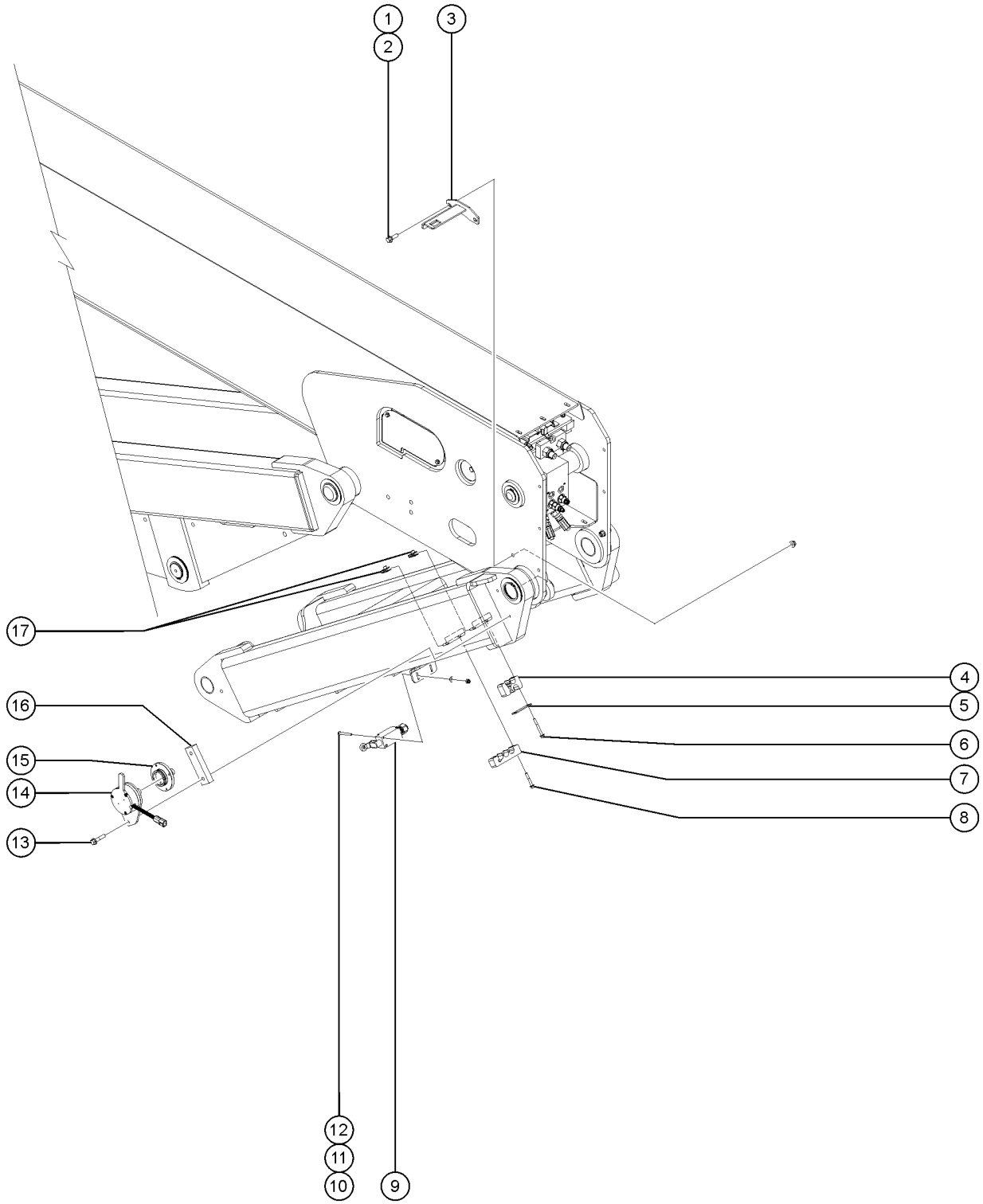

602.1 Linkage Assembly - View 2

Item	Part No.	Description	Qty.
1	824091GT	SCREW, HHF, 3/8-16 X 1.25, 8, ZAG	2
2	1274322GT	NUT,NYLOCK FLG,3/8-16,F,ZAG	2
3	1276510GT	WELDMENT,SENSOR RETAINER,PRIMARY	1
4	1280841GT	CLAMP, TIMINGLINK, LH	1
5	1276464GT	BAR CLAMP TIMINGLINK	1
6	1257866GT	SCREW,HHF,1/4-20X2.25,8,ZAG	2
7	1308313GT	HOSE CLAMP	1
8	824082GT	SCREW, HHF, 1/4-20 X 1.75, 8, ZAG	2
9		Ref. HARNESS, LST3S, BOOM DOWN LIMIT SWITCH Refer to 310.1	1
9-	88356-11103GT	SWITCH,LIMIT,W/RLR ARM,NO/NC	
9-	119056GT	CONN, PLUG, 2 WAY, DEUTSCH, DT, ENDCAP	
9-	73814GT	CONN,DSCH,BOOT,DT2S-BT	
10	1256177GT	SCREW,PHPM,10-32X1.75,ZAG	2
11	1253185GT	WASHER,FLAT,#10,USS,ZAG	2
12	1283005GT	NUT,NYLOCK FLG,10-32,A,ZAG	2
13	824093GT	SCREW, HHF, 3/8-16 X 1.75, 8, ZAG	2
14	1276511GT	ASSEMBLY,ROTARY SENSOR,BOOM ANGLE S60/65-XC Includes 13, 15, 16	1
14-	1275625GT	CARRIER,SENSOR,PRIMARY	
14-	1268505GT	HOUSING, SENSOR, PRIMARY	
14-	1253815GT	SNAP RING,EXTERNAL,2.00,ZAG	
14-	1275778GT	ANGLE SENSOR,360DEG,CAN(R/B 1276511GT)	
14-	1276444GT	PLATE,SENSOR MAG RETAINER	
15	1277776GT	PIN,GUIDE,SENSOR MOUNT	1
16	1276445GT	PLATE,SPACER,SENSOR MAG RETAINER	1
17	56912GT	SPRING CLIP,1/4-20,.025-.15X.54,ZAG	4
18	77103-3600GT	SLEEVE,NYLON,3.13 ID (Item not shown,Used to protect hoses and cables behind boom before entering the cable track) from SN S65XCH-49520	1 inches

603.1 Boom Components - View 1

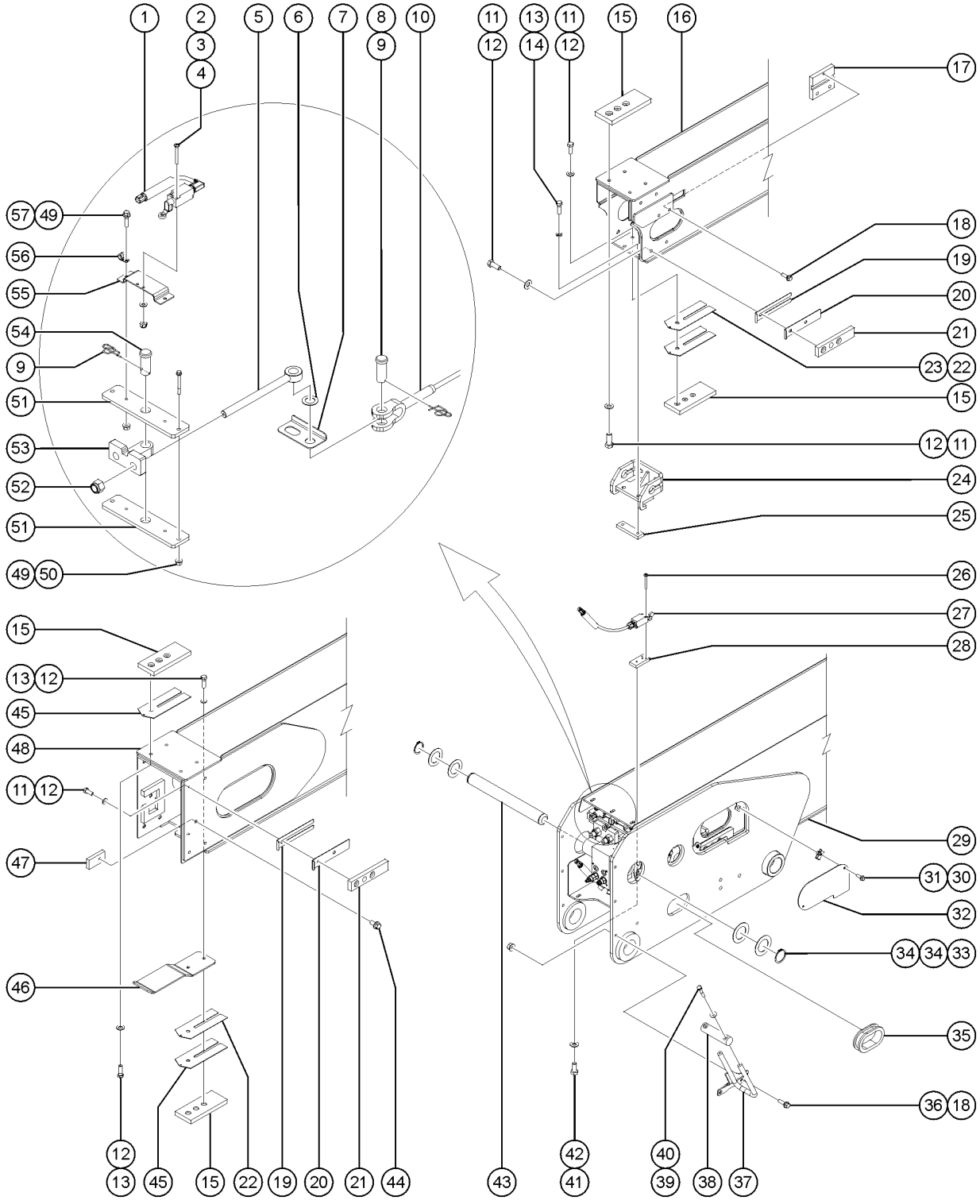

603.1 Boom Components - View 1

Item	Part No.	Description	Qty.
1		Ref : HARNESS, LSB2S, S80/85 Refer to 310.1	1
1-	88356-13107GT	SWITCH,LIMIT,TABULATE,BLUE	
1-	119065GT	CONN, RECEP, 2 WAY, DEUTSCH, DT	
1-	97128GT	ROLLER ARM,LIMIT SWITCH***	
2	824216GT	SCREW, PHPM, 10-32 X 1.5, ZAG	2
3	1253185GT	WASHER,FLAT,#10,USS,ZAG	2
4	6178GT	NUT, NYLOCK, 10-32	2
5	77656GT	ROD END,CABLE	2
6	1256119GT	WASHER,SHIM,1.01X1.63X.062,ZAG	2
7	77618GT	PLATE,ANTIROTATION	1
8	824127GT	PIN, CLEVIS, SAE 1.0 X 2.41, ZAG	2
9	824129GT	RUE RING,1.0,ZAG	3
10	110339GT	CABLE ASSY, EXTEND SET(PAIR)	1
11	824067GT	SCREW, HHC, 3/8-16 X 1, 8, ZAG	24
12	826793GT	WASHER,FLAT,3/8,SAE,HRD,ZAG	32
13	824068GT	SCREW, HHC, 3/8-16 X 1.25, 8, ZAG	8
14	824110GT	WASHER, LOCK, 3/8, ZAG	2
15	1276021GT	WEAR PAD,7 X 3 X .625 W/INSERT	7
16	1276514GT	ASSEMBLY, WELDMENT #3 WITH BEARINGS, S65-XC	1
16-	1276490GT	WELDMENT.BOOM SECTION # 3	
17	77616GT	PLATE,BOTTOM BLOCK	2
18	824091GT	SCREW, HHF, 3/8-16 X 1.25, 8, ZAG	6
19	1276017GT	SHIM,WEAR PAD,7 X 1.5,16GA	8
20	1276018GT	SHIM,WEAR PAD,7 X 1.5,14GA	8
21	1276019GT	WEAR PAD,7 X 1.5 X .625 W/INSERT	8
22	60840GT	SHIM,WEAR PAD,7 X 3,16GA	3
23	60304GT	SHIM,WEAR PAD,7 X 3,12GA	2
24	77688GT	WELDMENT,EXTENSION BRACKET	1

603.1 Boom Components - View 1

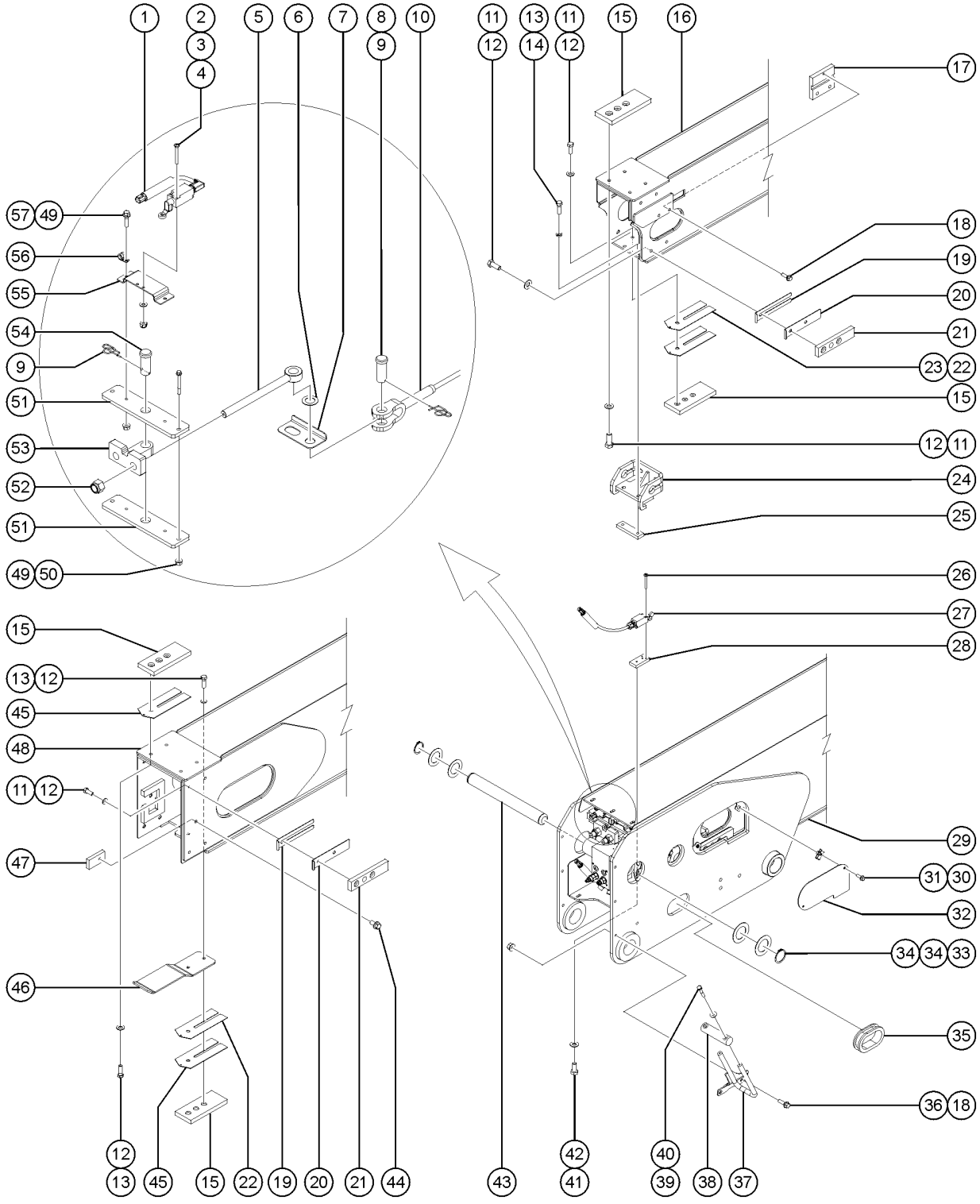

Item	Part No.	Description	Qty.
25	77713GT	PLATE,TAP BLOCK	1
26	51063GT	SCREW,PHILLIPS,RHM,10-32 X 1.5	2
27		REF. HARNESS, LSB1RS, S80/85 Refer to 310.1	1
27-	88356-32163GT	SWITCH,LIMIT,TABULATED,BLUE	
27-	97232GT	CONTACTOR-LIMIT SWITCH**	
27-	97128GT	ROLLER ARM,LIMIT SWITCH***	
27-	110650GT	CONN. SQZ PG11 .30-.40 W/ORING	
28	1283538GT	TAP BLOCK, LIMIT SWITCH	1
29	1310265GT	WELDMENT, BOOM SEC #1	1
30	824078GT	SCREW,HHF,1/4-20X.75,8,ZAG	4
31	56912GT	SPRING CLIP,1/4-20,.025-.15X.54,ZAG	4
32	77882GT	COVER,RH,BOOM SECTION #1	2
33	825796GT	SNAP RING,EXTERNAL,1.50,ZAG	2
34	1251565GT	WASHER,SHIM,1.56X2.5X.061,ZAG	4
35	71768GT	GROMMET,4.00 GRV. X .75 THK. to SN S65XCH-50543	1
36	1274322GT	NUT,NYLOCK FLG,3/8-16,F,ZAG	2
37	1276468GT	WELDMENT, BOOM HOSES AND CABLES GUIDE, S65XC	1
38	1276482GT	ROLLER, BOOM HOSES & CABLES GUIDE, S65XC	1
39	824062GT	SCREW,HHC,1/4-20X1.5,8,ZAG	2
40	824113GT	WASHER,FLAT,USS,1/4,ZAG	2
41	1256464GT	SCREW,HHC,5/16-18X.75,8,ZAG	2
42	825358GT	WASHER,FLAT,5/16,USS,ZAG	2
43	81856GT	PIN,1.50DIAX13.43LG,2RING	1
44	824089GT	SCREW, HHF, 3/8-16 X .75, 8, ZAG	2
45	60304GT	SHIM,WEAR PAD,7 X 3,12GA	4
46	1276453GT	FORMING,LS RAMP	1
47	88795GT	CAP,EXTENSION	2
48	1276491GT	WELDMENT.BOOM SECTION # 2***	1

603.1 Boom Components - View 1

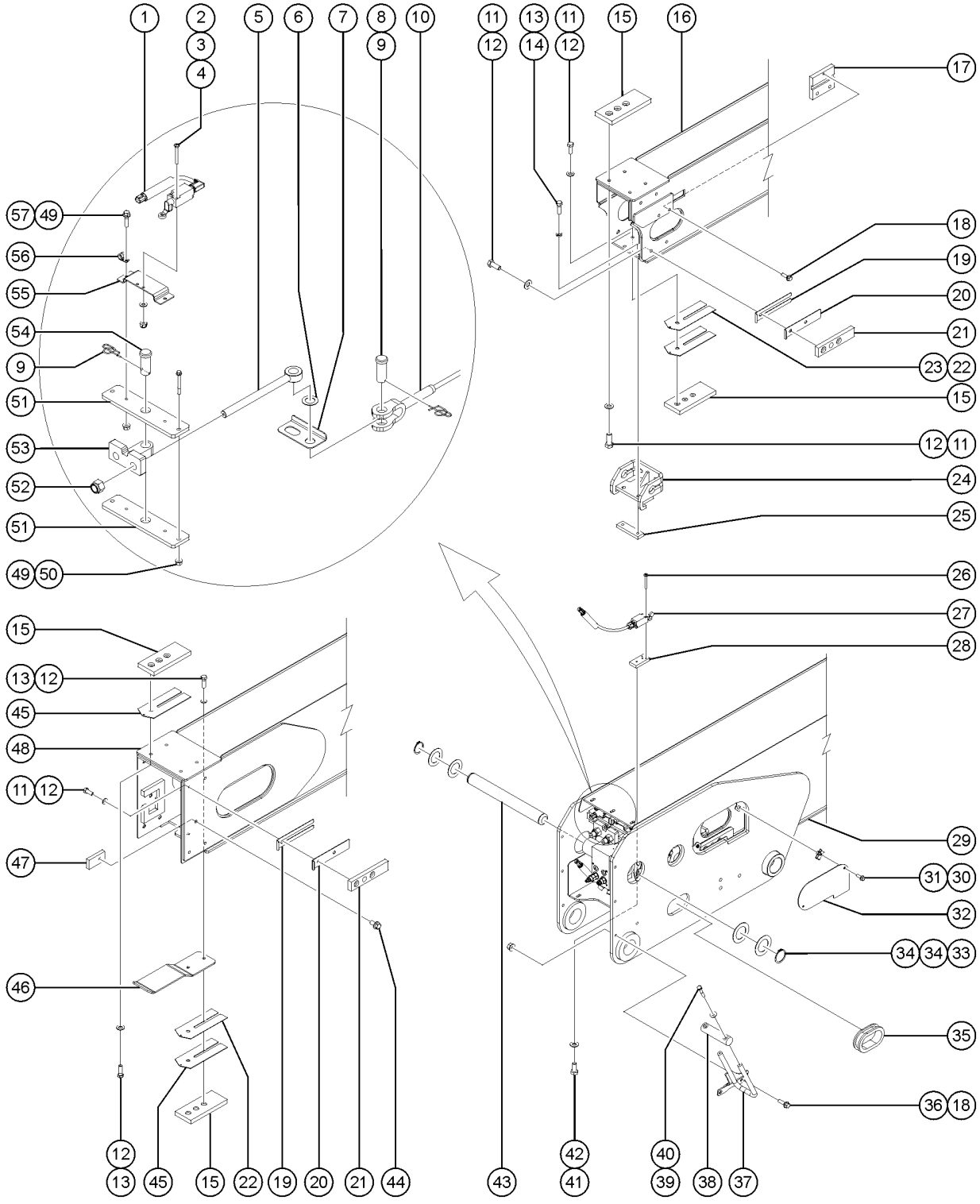

603.1 Boom Components - View 1

Item	Part No.	Description	Qty.
49	1277924GT	NUT,NYLOCK FLG,1/4-20,F,ZAG	4
50	824083GT	SCREW,HHF,1/4-20X2.5,8,ZAG	2
51	77654PGT	PLATE,ROCKER	2
52	77051GT	NUT,NYLOCK,3/4-10,GRD.8	2
53	77795GT	MACHINED PIVOT PLATE WELDMENT	1
54	826379GT	PIN,CLEVIS,1X2.250,ZAG	1
55	77653GT	FORMING,LIMIT SWITCH BRACKET	1
56	6833GT	CLAMP,0.50,#8 X 1/4,RUB CUSH	1
57	824079GT	SCREW,HHF,1/4-20X1,8,ZAG	2

604.1 Boom Components - View 2

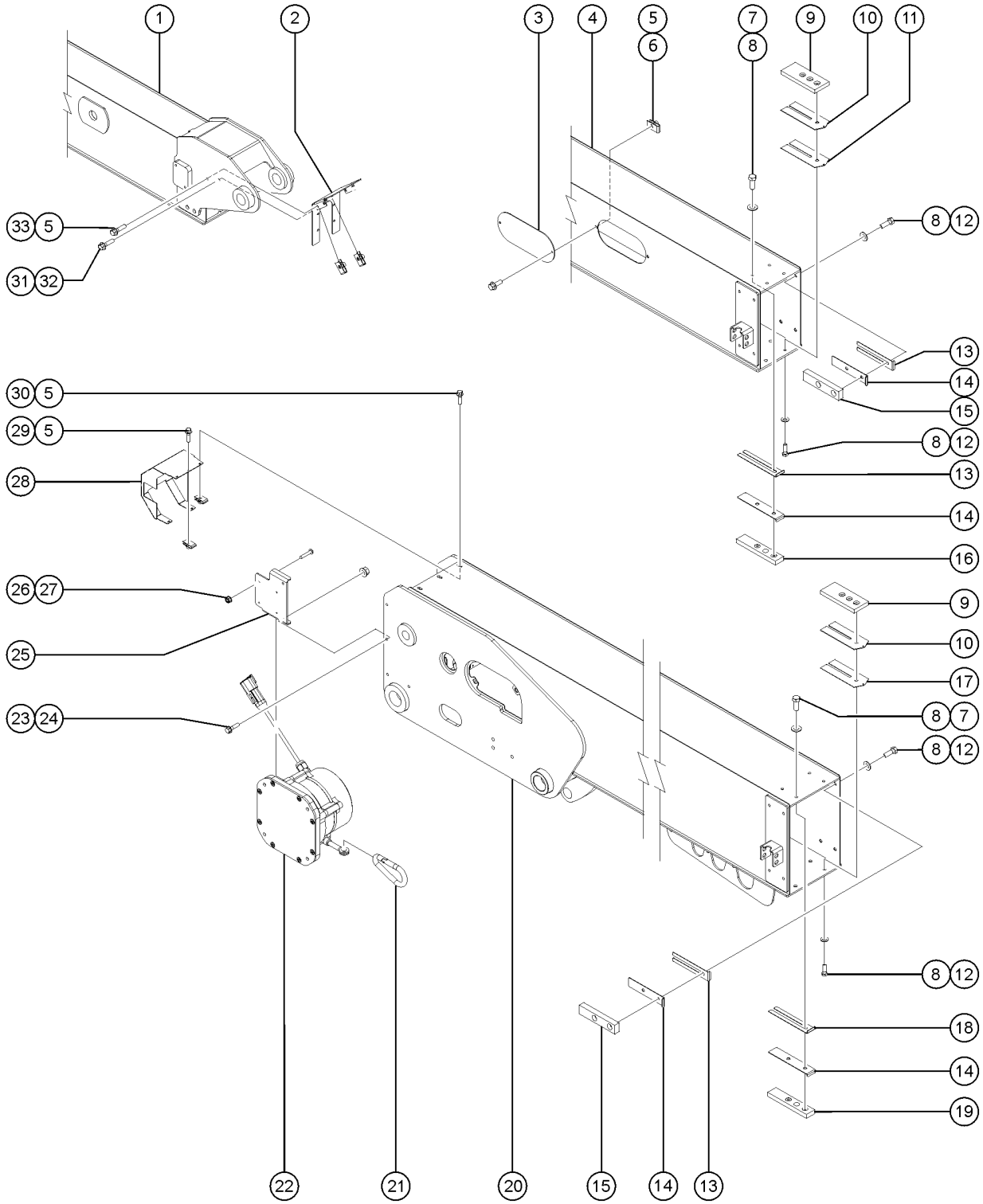

604.1 Boom Components - View 2

Item	Part No.	Description	Qty.
1		Ref : WELDMENT.BOOM SECTION # 3 Refer to 603.1	1
2	1276396GT	COVER.DEBRIS #3 BOOM to SN S65XCH-49351	1
3	77884GT	COVER,BOOM SECTION #2	2
4		Ref : WELDMENT.BOOM SECTION # 2*** Refer to 603.1	1
5	56912GT	SPRING CLIP,1/4-20,.025-.15X.54,ZAG to SN S65XCH-50849	13
5B	36456GT	SPRING CLIP,5/16-18,.025-.15X. from SN S65XCH-50850	13
6	824078GT	SCREW,HHF,1/4-20X.75,8,ZAG	4
7	824067GT	SCREW, HHC, 3/8-16 X 1, 8, ZAG	8
8	826793GT	WASHER,FLAT,3/8,SAE,HRD,ZAG	32
9	1276021GT	WEAR PAD,7 X 3 X .625 W/INSERT	4
10	60304GT	SHIM,WEAR PAD,7 X 3,12GA	4
11	60840GT	SHIM,WEAR PAD,7 X 3,16GA	4
12	824068GT	SCREW, HHC, 3/8-16 X 1.25, 8, ZAG	24
13	1276017GT	SHIM,WEAR PAD,7 X 1.5,16GA	10
14	1276018GT	SHIM,WEAR PAD,7 X 1.5,14GA	12
15	1273674GT	WEAR PAD,7 X 1.5 X .875 W/INSERT	8
16	1276019GT	WEAR PAD,7 X 1.5 X .625 W/INSERT	2
17	60304GT	SHIM,WEAR PAD,7 X 3,12GA	2
18	1276017GT	SHIM,WEAR PAD,7 X 1.5,16GA	2
19	1273674GT	WEAR PAD,7 X 1.5 X .875 W/INSERT	2
20		Ref : WELDMENT.BOOM SECTION # 1*** Refer to 603.1	1
21	1323139GT	CARABINER, 1/4 X 2.375, 170 LBS CAPACIT from SN S65XCH-50231	1
22	1278666GT	LENGTH TRANSDUCER, 400 IN, CAN ID 47 to SN S65XCH-50230	1
22B	1319559GT	LENGTH TRANSDUCER, 400 IN, CAN ID 47 from SN S65XCH-50231	1
23	824087GT	SCREW, HHF, 5/16-18 X 1.25, 8, ZAG	2
24	1274167GT	NUT,NYLOCK FLG,5/16-18,F,ZAG	2
25	1276509GT	1276509GT WELDMENT,STRING POT MOUNT S60/65-XC to SN S65XCH-50230	1
25B	1321096GT	FORMING, SENSOR MOUNT, S60/65XC from SN S65XCH-50231	1

604.1 Boom Components - View 2

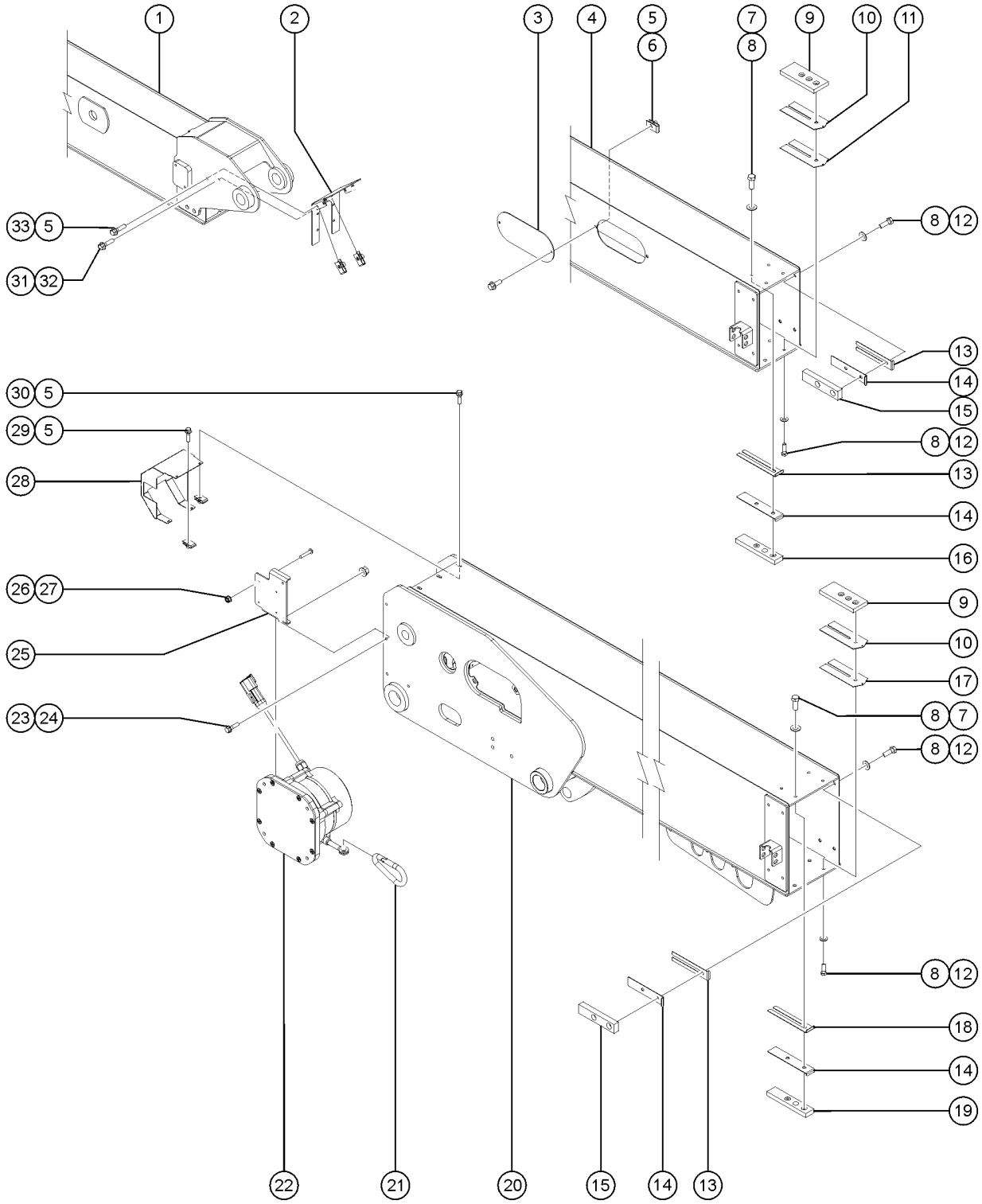

604.1 Boom Components - View 2

Item	Part No.	Description	Qty.
26	1283005GT	NUT,NYLOCK FLG,10-32,A,ZAG	4
27	826516GT	SCREW, PHPM, 10-32 X 1.0, ZAG	4
28	1276508GT	WELDMENT, COVER, PRIMARY BOOM, S60/65-XC to SN S65XCH-50230	1
28B	1321097GT	WELDMENT, COVER, MAST #1 from SN S65XCH-50231	1
29	824077GT	SCREW, HHF, 1/4-20 X .5, 8, ZAG to SN S65XCH-50849	1
29B	824085GT	SCREW, HHF, 5/16-18 X .75, 8, ZAG from SN S65XCH-50850	1
30	824079GT	SCREW,HHF,1/4-20X1,8,ZAG to SN S65XCH-50849	4
30B	824086GT	SCREW,HHF,5/16-18X1,8,ZAG from SN S65XCH-50850	4
31	824079GT	SCREW,HHF,1/4-20X1,8,ZAG to SN S65XCH-49351	2
32	56912GT	SPRING CLIP,1/4-20,.025-.15X.54,ZAG to SN S65XCH-49351	2
33	824079GT	SCREW,HHF,1/4-20X1,8,ZAG	8

605.1 Boom Components - View 3

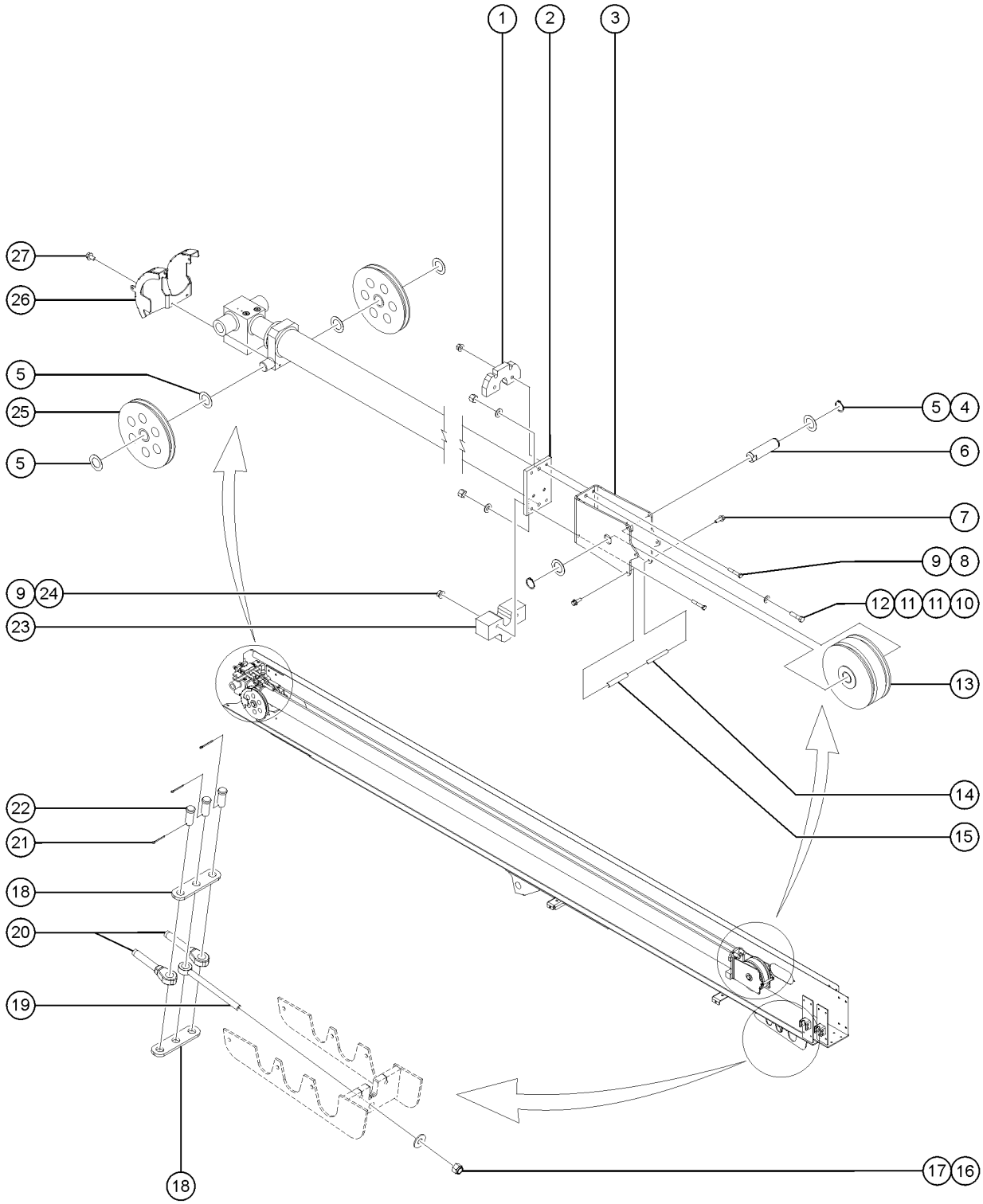

605.1 Boom Components - View 3

Item	Part No.	Description	Qty.
1	139385GT	GUIDE, EXT CABLE, TOP	1
2	1276413GT	CYLINDER, PRIMARY EXTENSION, S-65 XC	1
2-	1284093GT	SEAL KIT, CYLINDER PRIMARY EXTENSION	
2-	1281963GT	VALVE, COUNTERBALANCE, CACA-LHN-1500 V1, (Extend)	
2-	1274315GT	VALVE, COUNTERBALANCE, CABG-LHN@1200 4.5:1 V2, (Retract)	
3	139384GT	BRACKET, EXTEND SHEAVE	1
4	825796GT	SNAP RING,EXTERNAL,1.50,ZAG	2
5	1251565GT	WASHER,SHIM,1.56X2.5X.061,ZAG	6
6	88793GT	PIN,1.5 X 5.50 LG	1
7	824078GT	SCREW,HHF,1/4-20X.75,8,ZAG	6
8	1252978GT	SCREW,HHC,3/8-16X2.25,8,ZAG	2
9	1274322GT	NUT,NYLOCK FLG,3/8-16,F,ZAG	4
10	1255782GT	SCREW,HHC,1/2-13X2.0,8,ZAG	2
11	825353GT	WASHER,FLAT,1/2,SAE,HRD,ZAG	4
12	1274320GT	NUT,NYLOCK,1/2-13,C,ZAG	2
13	88567GT	SHEAVE,EXTENSION CABLE(LARGER)	1
14	77649GT	ROLLER,1/2" ALUMINUM	3
15	77648GT	ROLLER,1/2" PVC	3
16	77051GT	NUT,NYLOCK,3/4-10,GRD.8	1
17	1255761GT	WASHER,FLAT,3/4,USS,HRD,ZAG	1
18	88796GT	PLATE,RETRACTION CABLE EQUALIZ	2
19	77656GT	ROD END,CABLE	1
20	110340GT	CABLE ASSY, RETRACT SET (PAIR)	1
21	13635-10GT	PIN,COTTER,.156 X 1.75	3
22	826379GT	PIN,CLEVIS,1X2.250,ZAG	3
23	139288GT	GUIDE, EXT. CABLE, BOTTOM	1
24	1258892GT	SCREW,HHC,3/8-16X3.5,8,ZAG	2
25	88568GT	SHEAVE,RETRACT CABLE(SMALLER)	2

605.1 Boom Components - View 3

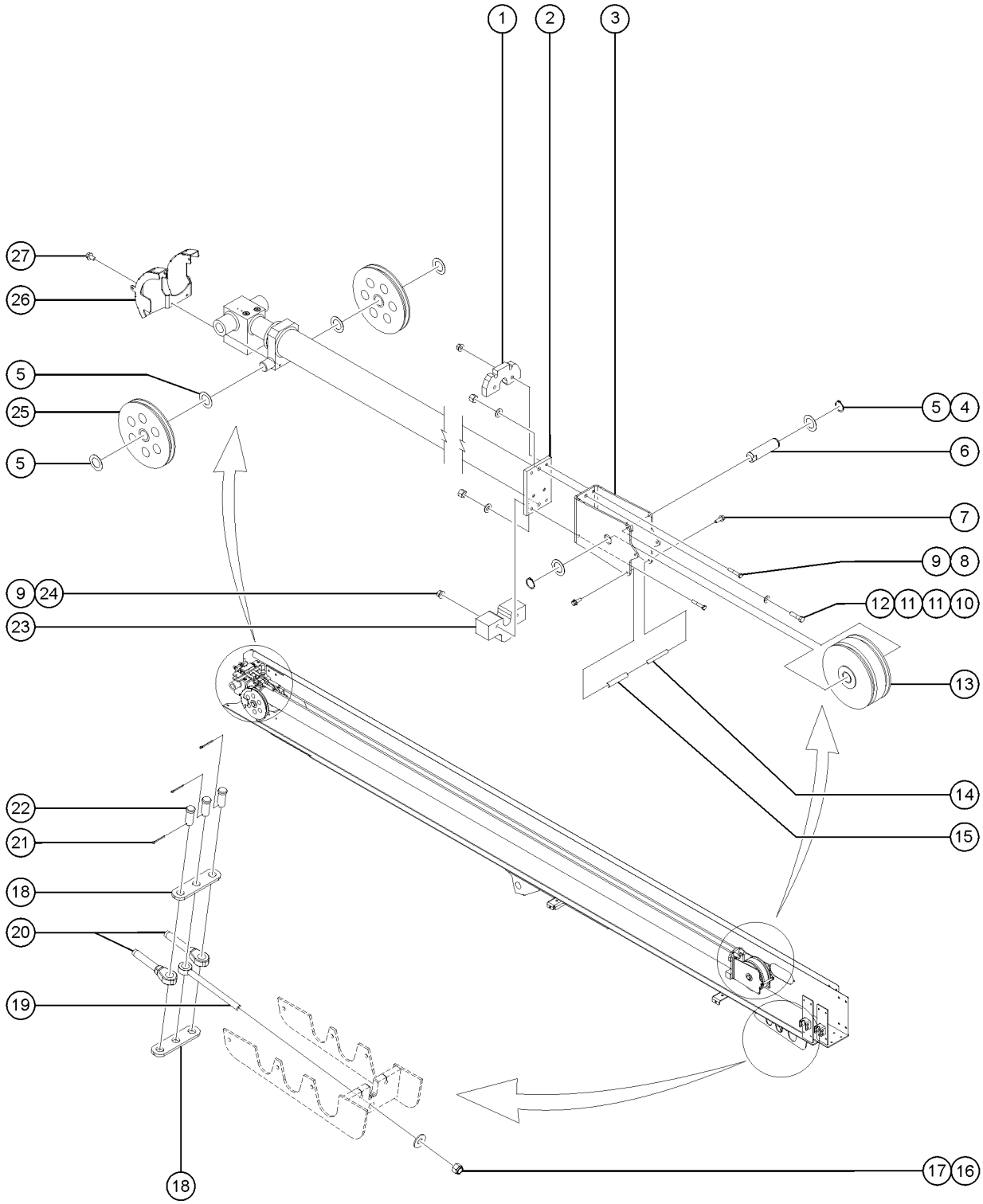

605.1 Boom Components - View 3

Item	*Part No.*	*Description*	*Qty.*
26	1276437GT	WELDMENT,RETRACT SHEAVE COVER	1
27	824077GT	SCREW, HHF, 1/4-20 X .5, 8, ZAG	2

606.1 Boom End Components, S-65XC

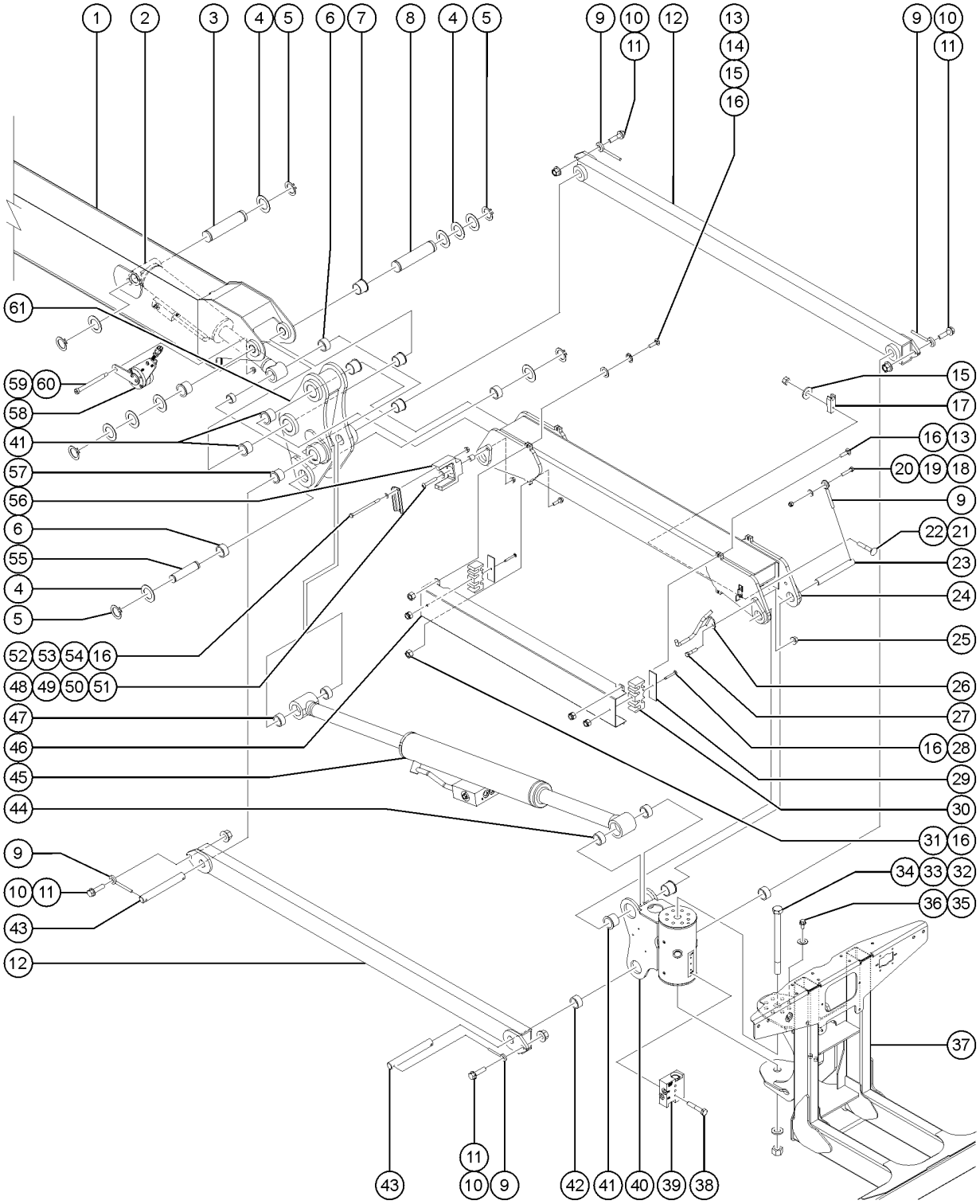

Item	Part No.	Description	Qty.
-	77103-4000GT	SLEEVE,NYLON,3.13 ID (Item not shown,Used to protect hoses and cables behind boom before entering the cable track) from SN S65XCH-49520	1 inches
1		ref : WELDMENT.BOOM SECTION # 3 Refer to 603.1	
2	1311457GT	CYLINDER, PLATFORM LEVEL	1
2-	1279049GT	SEAL KIT, CYLINDER, LEVEL	
2-	61602GT	VALVE,COUNTERBAL.CBBB-LHN@3500	1
2-	54065GT	VALVE,COUNTERBALANCE,3500***	1
3	1276427GT	PIN,1.50DIA.X7.47LG,2RING	1
4	1251565GT	WASHER,SHIM,1.56X2.5X.061,ZAG	10
5	825796GT	SNAP RING,EXTERNAL,1.50,ZAG	6
6	18396GT	BEARING,1.5IDX1.75ODX1.0L	6
7	1273706GT	BEARING,1.5IDX1.75ODX1.825L	2
8	1307726GT	PIN,1.50DIAX10.25LG,2RING,1THRD	1
9	825019GT	ROD END, .375X3.69, ZAG	6
10	824092GT	SCREW,HHF,3/8-16X1.5,8,ZAG	4
11	1274322GT	NUT,NYLOCK FLG,3/8-16,F,ZAG	4
12	1274511GT	MACHINING, COMPRESSION LINK	2
13	824079GT	SCREW,HHF,1/4-20X1,8,ZAG to SN S65XCH-49289	4
13B	1256127GT	BOLT,CARRIAGE,1/4-20X1",GR 5,ZAG from SN S65XCH-49290 to SN S65XCH-50459	4
13C	824079GT	SCREW,HHF,1/4-20X1,8,ZAG from SN S65XCH-50460	4
14	238135GT	PUSHNUT RETAINER, 1/4" X 1/2"OD, ZINC	4
15	824113GT	WASHER,FLAT,USS,1/4,ZAG	8
16	1274165GT	NUT,NYLOCK,1/4-20,C,ZAG	6
17	1269642GT	CLAMP, HOSE	2
18	1253478GT	SCREW,HHF,3/8-16X2,8,ZAG	2
19	1255758GT	WASHER,FLAT,3/8,USS,ZAG	2
20	1274166GT	NUT,NYLOCK,3/8-16,C,ZAG	2
21	1255756GT	BOLT,CARRIAGE,1/4-20X1.5,5,ZAG	2

606.1 Boom End Components, S-65XC

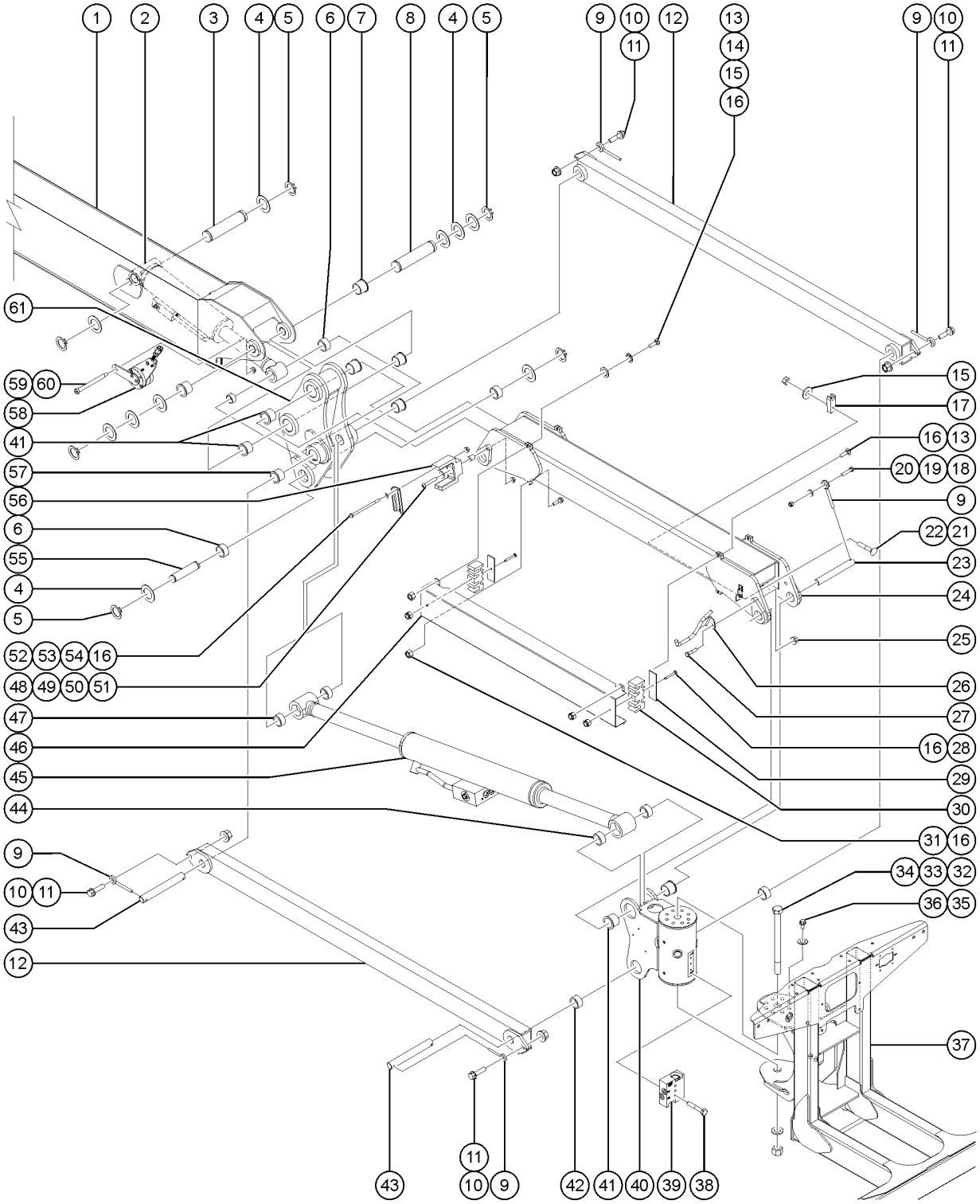

Item	Part No.	Description	Qty.
22	1274165GT	NUT,NYLOCK,1/4-20,C,ZAG	2
23	76695GT	PIN,1.50 DIA X 8.75"LG,1HOLE	2
24	1269424GT	MACHINING, 5 FT JIB BOOM	1
25	1274322GT	NUT,NYLOCK FLG,3/8-16,F,ZAG	1
26	1286171GT	WELDMENT, JIB HOSE GUIDE	1
27	824093GT	SCREW, HHF, 3/8-16 X 1.75, 8, ZAG	1
28	1256180GT	BOLT,CARRIAGE,1/4-20X2.75,5,ZAG	2
29	128483GT	BACKING PLATE, HOSE BLOCK, JIB	2
30	1283307GT	CLAMP, JIB HOSE/CABLE	2
31	824080GT	SCREW, HHF, 1/4-20 X 1.25, 8, ZAG to SN S65XCH-49289	2
31B	1256127GT	BOLT,CARRIAGE,1/4-20X1",GR 5,ZAG from SN S65XCH-49290 to SN S65XCH-50459	2
31C	824079GT	SCREW,HHF,1/4-20X1,8,ZAG from SN S65XCH-50460	2
32	824075GT	SCREW, HHC, 1-8 X 12.75, 5, ZAG	1
33	824116GT	WASHER, FLAT, F436, 1.0, ZAG	1
34	1283024GT	NUT,NYLOCK,1-8,8,ZAG	1
35	1256843GT	SCREW,HHC,1/2-13X1.25,8,ZAG	8
36	825353GT	WASHER,FLAT,1/2,SAE,HRD,ZAG	8
37	1273734GT	WELDMENT,PLAT SUPPORT,15K,LS Refer to 608.1	1
38	824081GT	SCREW,HHF,1/4-20X1.5,8,ZAG	3
39		Ref : MANIFOLD, ROTATOR, CB Refer to 404.1	
40	214225GT	ROTATOR,PLATFORM,15K,JIB	1
40-	226542GT	SEAL KIT, 15K ROTATOR	
40-	88516GT	SCREW,BLEEDER,M5X0.8	
41	214226GT	BEARING,FL,1.75IDX2.00ODX1.61L	6
42	30222GT	BEARING,FL,1.25IDX1.41ODX1.50L	2
43	81175GT	PIN,1.25DIAX14.45LG,2HOLE	2
44	88280GT	BEARING,1.5IDX1.75ODX0.75L	2
45	1276820GT	CYLINDER, JIB	1

606.1 Boom End Components, S-65XC

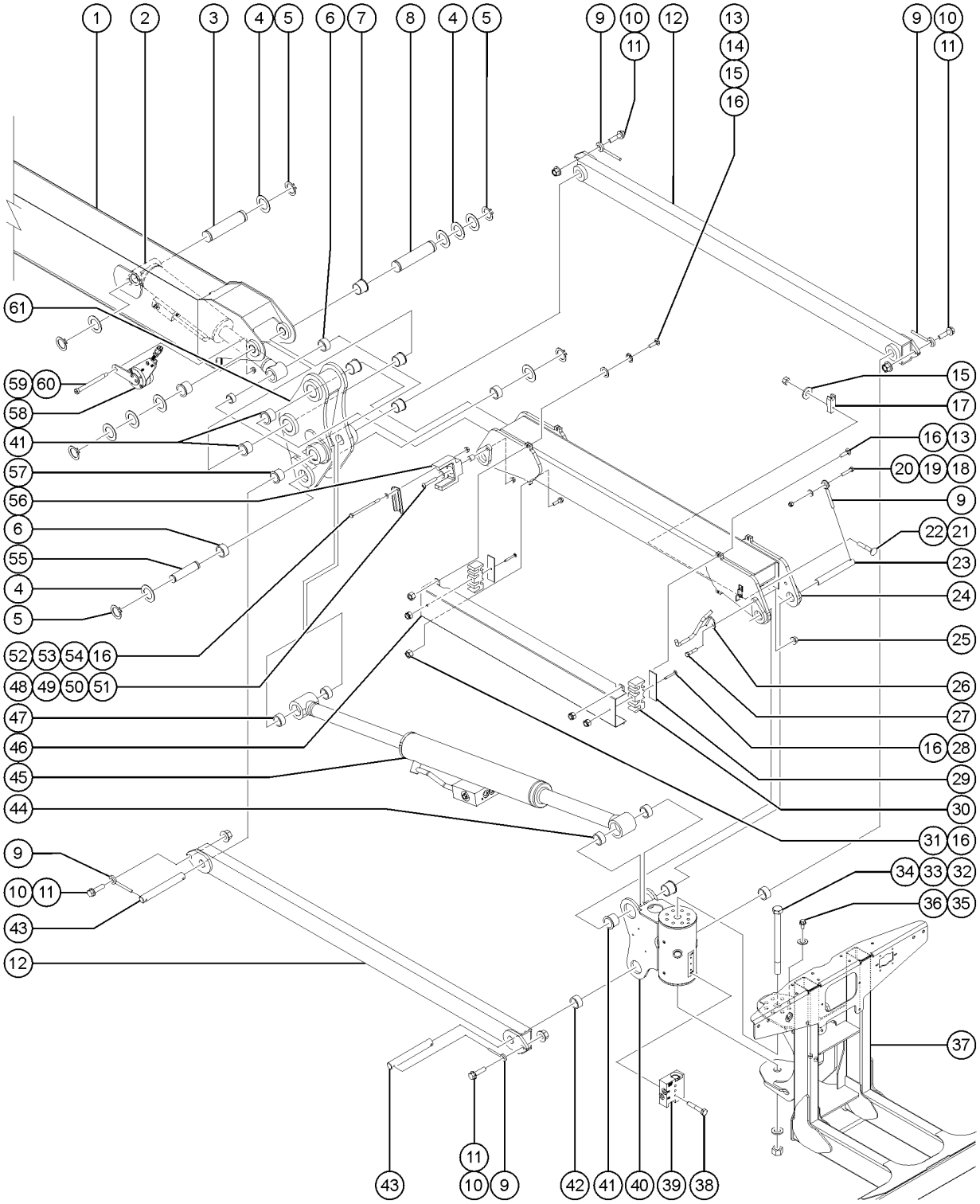

Item	Part No.	Description	Qty.
45-	33428GT	VALVE,COUNTERBALANCE	2
45-	1276822GT	SEAL KIT FOR JIB CYLINDER	
46	1269367GT	FORMING, HOSE COVER	1
47	30220GT	BEARING,1.25ID X 1.5OD X 0.69L	2
48	1256110GT	SCREW,BHC,3/8-16X2.25,F835,ZAG	1
49	233509GT	WASHER,FLAT,M10X30X2.5,DIN9021,ZAB	1
50	101932GT	TUBE, RD., STL., DOM .75 X .437 X .78	1
51	1283028GT	NUT,LP NYLOCK,3/8-16,2,ZAG	1
52	824065GT	SCREW,HHC,1/4-20X4,8,ZAG	2
53	824113GT	WASHER,FLAT,USS,1/4,ZAG	2
54	1265019GT	FORMING, CABLE GUIDE	1
55	1276484GT	PIN, 1.50X5.625, 2 RING	1
56	1284573GT	GUIDE,CABLE,UHMW	1
57	128268GT	BEARING,FL, 1.25X1.5X2.13	2
58	1306377GT	ASSEMBLY, ANGLE SENSOR, BELLCRANK	1
58-	1275778GT	ANGLE SENSOR,360DEG,CAN(R/B 1276511GT)	1
58-	1306386GT	BOLT,USSHS,1/2X.5X3/8-16,PLAIN	1
58-	237241GT	SCREW,FHS,M3-0.5X14,DIN7991,10	2
58-	110149GT	CABLE TIE,DFT MOUNT,BLK,6.5"	2
58-	1306383GT	ARM, MAGNET, ANGLE SENSOR	1
58-	1306382GT	RETAINER, ANGLE SENSOR, UNIVERSAL	1
58-	1306384GT	ARM, ANGLE SENSOR, BELLCRANK	1
58-	237242GT	SCREW,FHS,M3-0.5X8,DIN7991,10.9,ZAB	2
58-	1306389GT	SCREW,BHC,M6-1.0X40,10.9,ZAB	2
58-	1306388GT	SCREW,BHC,M6-1.0X35,10.9,ZAB	2
58-	1306387GT	SCREW,BHC,M6-1.0X16,10.9,ZAB	2
58-	1306381GT	CAP, TOP, ANGLE SENSOR, UNIVERSAL	1
58-	1306380GT	CARRIER, MAGNET, ANGLE SENSOR, UNIVERSAL	1

606.1 Boom End Components, S-65XC

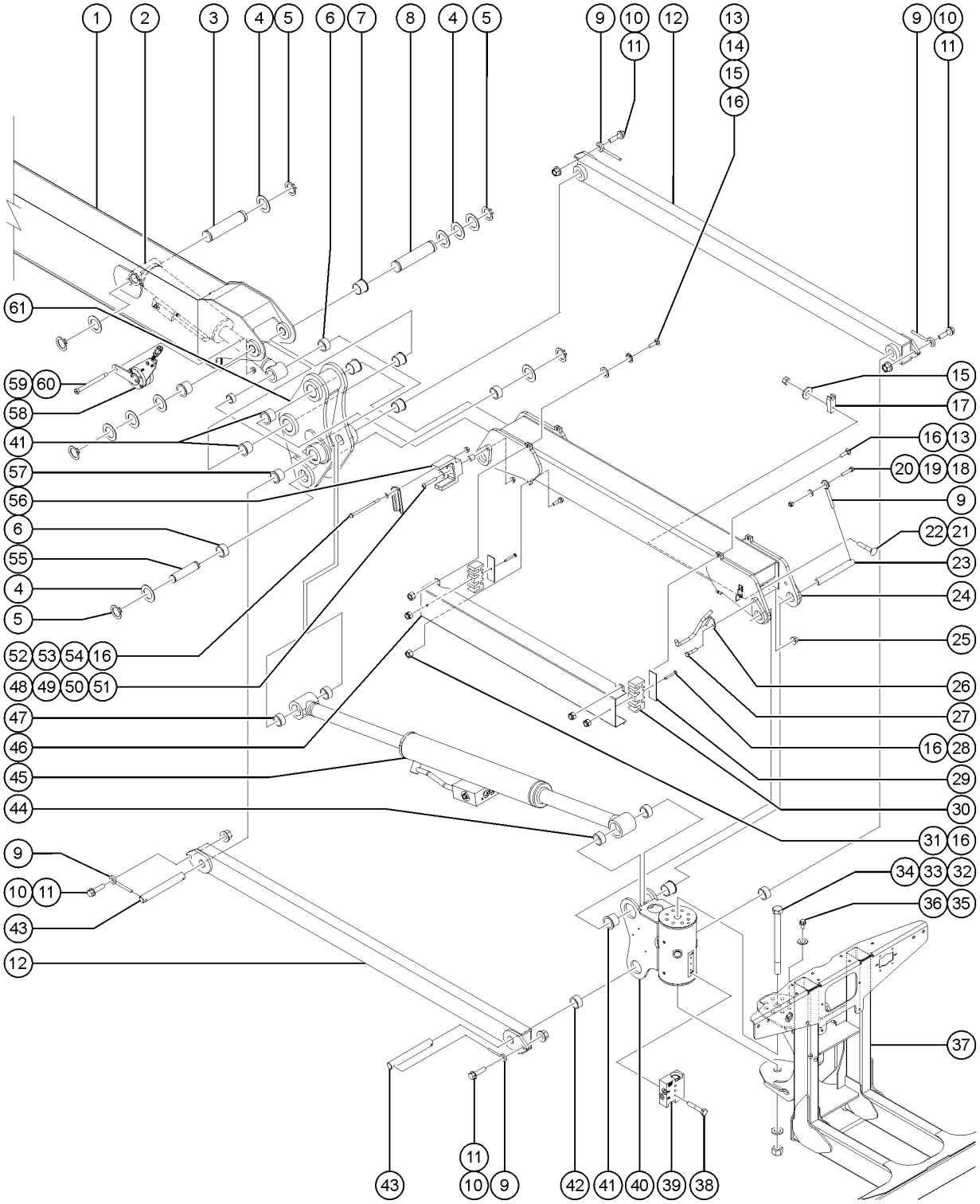

Item	*Part No.*	*Description*	*Qty.*
58-	1306379GT	CARRIER, SENSOR, ANGLE SENSOR, UNIVERSAL	1
59	1310738GT	BOLT,SHS,1/2X4.0X3/8-16,ZAG	2
60	1283028GT	NUT,LP NYLOCK,3/8-16,2,ZAG	1
61	238330GT	MACH. JIB BELLCRANK	1

607.1 Boom End Components, S-60XC

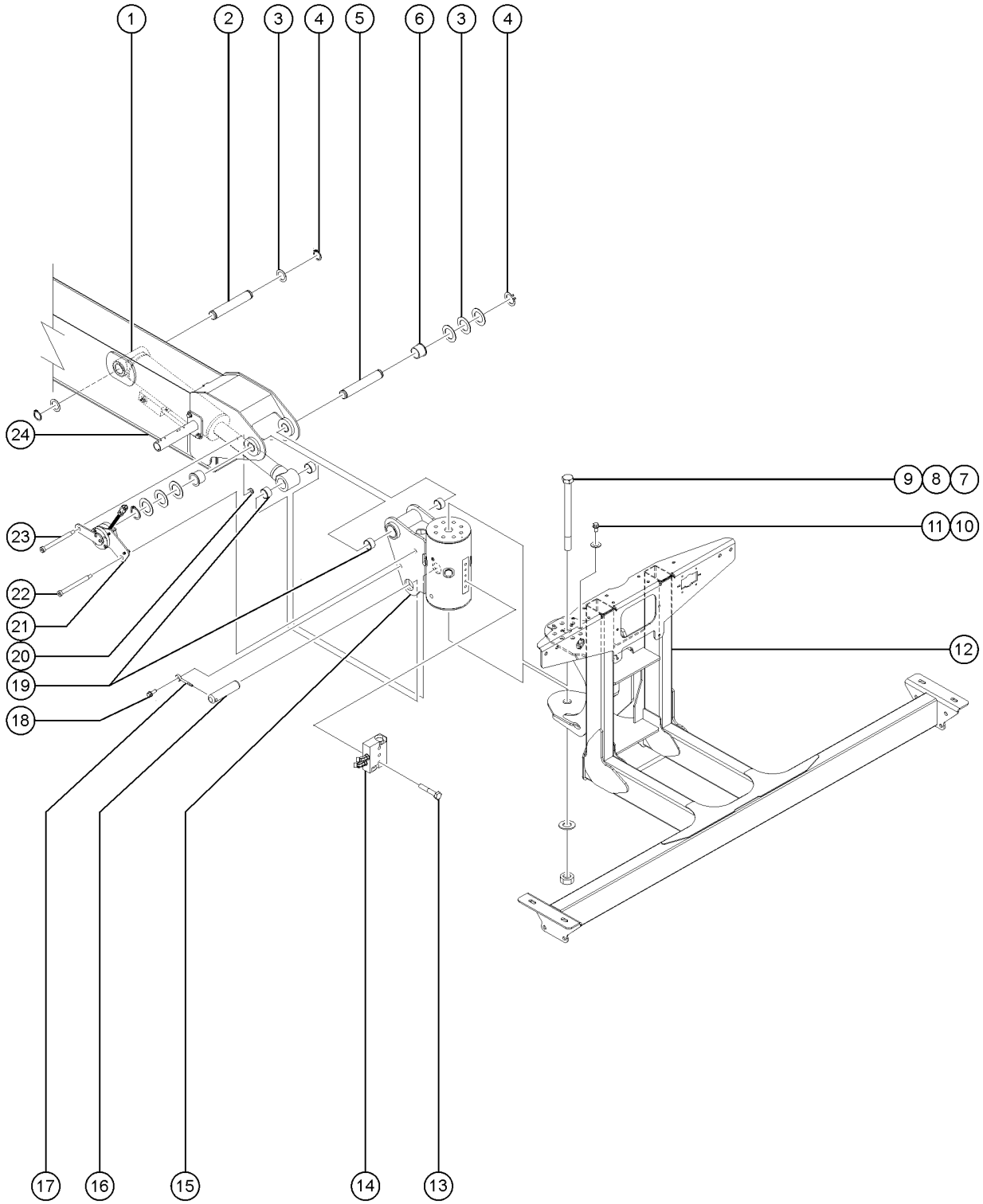

Item	Part No.	Description	Qty.
1	1311457GT	CYLINDER, PLATFORM LEVEL	1
1-	1279049GT	SEAL KIT, CYLINDER, LEVEL	
1-	61602GT	VALVE,COUNTERBAL.CBBB-LHN@3500	1
1-	54065GT	VALVE,COUNTERBALANCE,3500***	1
2	1276427GT	PIN,1.50DIA.X7.47LG,2RING	1
3	1251565GT	WASHER,SHIM,1.56X2.5X.061,ZAG	8
4	825796GT	SNAP RING,EXTERNAL,1.50,ZAG	4
5	1307726GT	PIN,1.50DIAX10.25LG,2RING,1THRD	1
6	1273706GT	BEARING,1.5IDX1.75ODX1.825L	2
7	824075GT	SCREW, HHC, 1-8 X 12.75, 5, ZAG	1
8	824116GT	WASHER, FLAT, F436, 1.0, ZAG	1
9	1283024GT	NUT,NYLOCK,1-8,8,ZAG	1
10	1256843GT	SCREW,HHC,1/2-13X1.25,8,ZAG	8
11	825353GT	WASHER,FLAT,1/2,SAE,HRD,ZAG	8
12		Ref : Platform support Refer to 608.1	1
13	824081GT	SCREW,HHF,1/4-20X1.5,8,ZAG	3
14		Ref : MANIFOLD, ROTATOR, CB Refer to 404.1	
15	1275169GT	ROTATOR,PLATFORM,15K,NON-JIB includes item 19	1
15-	226542GT	SEAL KIT, 15K ROTATOR	
15-	88516GT	SCREW,BLEEDER,M5X0.8	
16	108855GT	PIN,1.50DIAX5.25LG,1HOLE	1
17	825019GT	ROD END, .375X3.69, ZAG	1
18	824068GT	SCREW, HHC, 3/8-16 X 1.25, 8, ZAG	1
19	18396GT	BEARING,1.5IDX1.75ODX1.0L	6
20	1283028GT	NUT,LP NYLOCK,3/8-16,2,ZAG	1
21	1306378GT	ASSEMBLY, ANGLE SENSOR, ROTATOR	1
21-	1306379GT	CARRIER, SENSOR, ANGLE SENSOR, UNIVERSAL	1
21-	1306380GT	CARRIER, MAGNET, ANGLE SENSOR, UNIVERSAL	1

607.1 Boom End Components, S-60XC

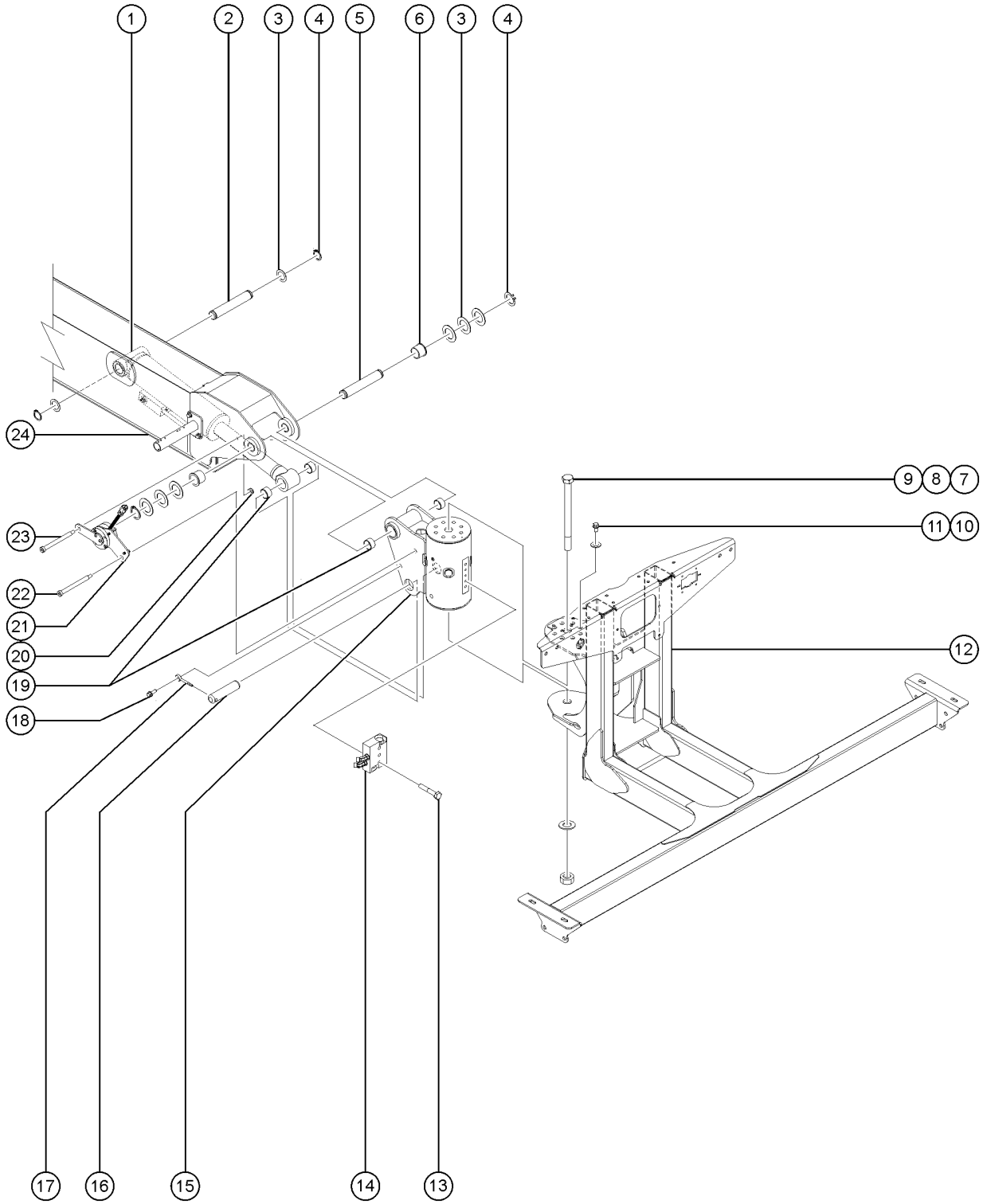

Item	Part No.	Description	Qty.
21-	1306381GT	CAP, TOP, ANGLE SENSOR, UNIVERSAL	1
21-	1306382GT	RETAINER, ANGLE SENSOR, UNIVERSAL	1
21-	1306383GT	ARM, MAGNET, ANGLE SENSOR	1
21-	1306385GT	ARM, ANGLE SENSOR, ROTATOR	1
21-	1306386GT	BOLT,USSHS,1/2X.5X3/8-16,PLAIN	1
21-	1306387GT	SCREW,BHC,M6-1.0X16,10.9,ZAB	2
21-	1306388GT	SCREW,BHC,M6-1.0X35,10.9,ZAB	2
21-	1306389GT	SCREW,BHC,M6-1.0X40,10.9,ZAB	2
21-	237241GT	SCREW,FHS,M3-0.5X14,DIN7991,10	2
21-	237242GT	SCREW,FHS,M3-0.5X8,DIN7991,10.9,ZAB	2
21-	1275778GT	ANGLE SENSOR,360DEG,CAN(R/B 1276511GT)	1
21-	110149GT	CABLE TIE,DFT MOUNT,BLK,6.5"	2
22	1310739GT	BOLT,SHS,1/2X5.0X3/8-16,ZAG	1
23	1310738GT	BOLT,SHS,1/2X4.0X3/8-16,ZAG	1
24		Ref : WELDMENT.BOOM SECTION # 3 Refer to 603.1	

608.1 Boom End Components, Load Sense

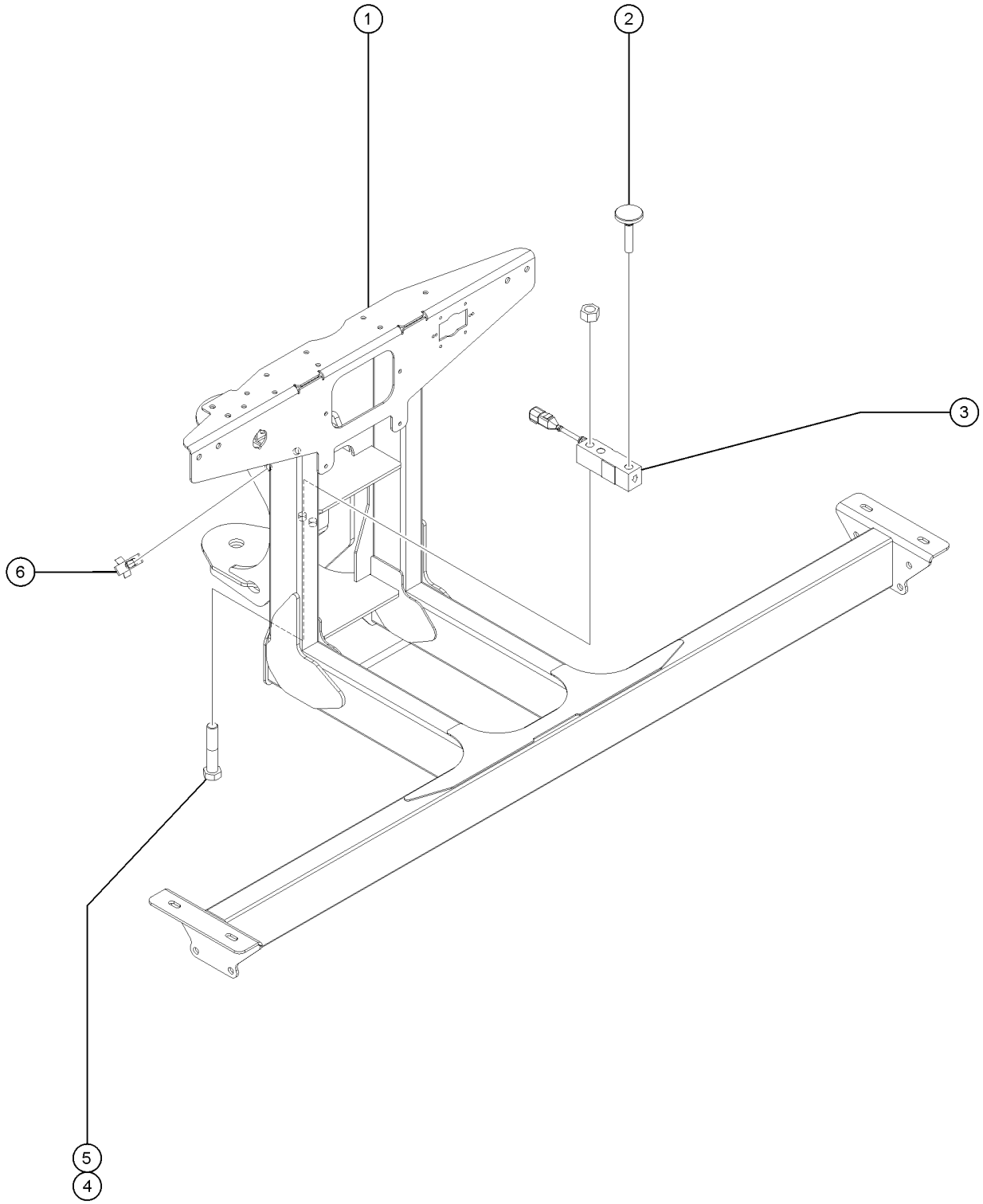

Item	*Part No.*	*Description*	*Qty.*
1	1273734GT	WELDMENT,PLAT SUPPORT,15K,LS	1
2	1270337GT	LEVELING MOUNT, SWIVEL, 1/2-20	1
3	1270278GT	LOAD CELL,J1939,650KG/1433LB NOTE: install with arrows pointing downwards (Calibration required after replacement)	1
4	1257464GT	SCREW,HHC,1/2-13X2.5,8,ZAG	2
5	1259106GT	NUT,1/2-13,8,ZAG	2
6	105214GT	CABLE TIE MOUNT, WINGED	2

609.1 Cable Track

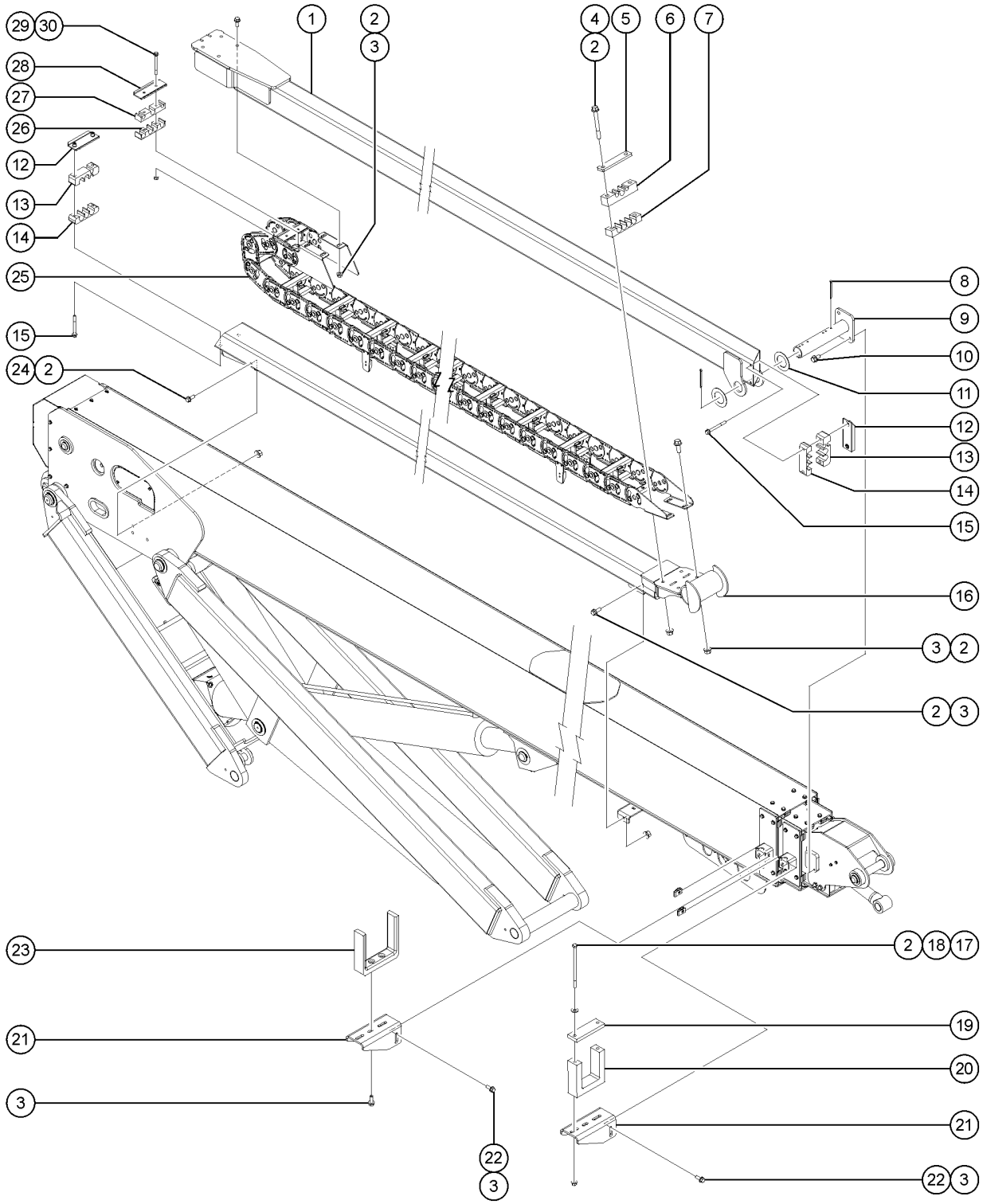

Item	Part No.	Description	Qty.
1	1276521GT	WELDMENT, UPPER CABLE TRACK TUBE, S65XC	1
2	1274322GT	NUT,NYLOCK FLG,3/8-16,F,ZAG	16
3	824090GT	SCREW,HHF,3/8-16X1,8,ZAG	20
4	824096GT	SCREW, HHF, 3/8-16 X 3.5, 8, ZAG	2
4B	1258395GT	SCREW,HHF,3/8-16X4,8,ZAG (air to platform and welder option)	2
4B-	228796GT	CLAMP, OPTIONS, CABLE TRACK (air to platform and welder option)	
5	228797GT	BAR, CLAMP, CABLE TRACK	1
6	1276450GT	CLAMP,CABLES	1
7	1280839GT	CLAMP, HOSE	1
8	42079GT	PIN,COTTER,.156 X 2.5	2
9	81347GT	WELDMENT,TRACK PULL TUBE PIVOT	1
10	824089GT	SCREW, HHF, 3/8-16 X .75, 8, ZAG	2
11	1251565GT	WASHER,SHIM,1.56X2.5X.061,ZAG	2
12	1296817GT	ASSY, CLAMP PLATE, CABLE TRACK	2
12-	1296816GT	CLAMP PLATE, CABLE TRACK	2
12-	56912GT	SPRING CLIP,1/4-20,.025-.15X.54,ZAG	4
13	1276449GT	CLAMP,CABLES	2
14	1280837GT	CLAMP, HOSE	2
15	824083GT	SCREW,HHF,1/4-20X2.5,8,ZAG	4
15B	1257867GT	SCREW,HHF,1/4-20X3.5,8,ZAG (air to platform and welder option)	4
15B-	1280838GT	CLAMP BLOCK, OPTIONS (air to platform and welder option)	
16	1276520GT	WELDMENT, LOWER CABLE TRACK TRAY, S65XC	1
17	1255391GT	SCREW,HHC,3/8-16X7,8,ZAG	2
18	1255758GT	WASHER,FLAT,3/8,USS,ZAG	2
19	81342GT	WEAR PAD,5.5 X 1.75 X .5	1
20	81341GT	WEAR PAD,CABLE TRACK PULL TUBE	1
21	1276432GT	FORMING PLATE, S60/65-XC	2
22	29868GT	SPRING CLIP,3/8-16,.05-.20X.73,ZAG	8

609.1 Cable Track

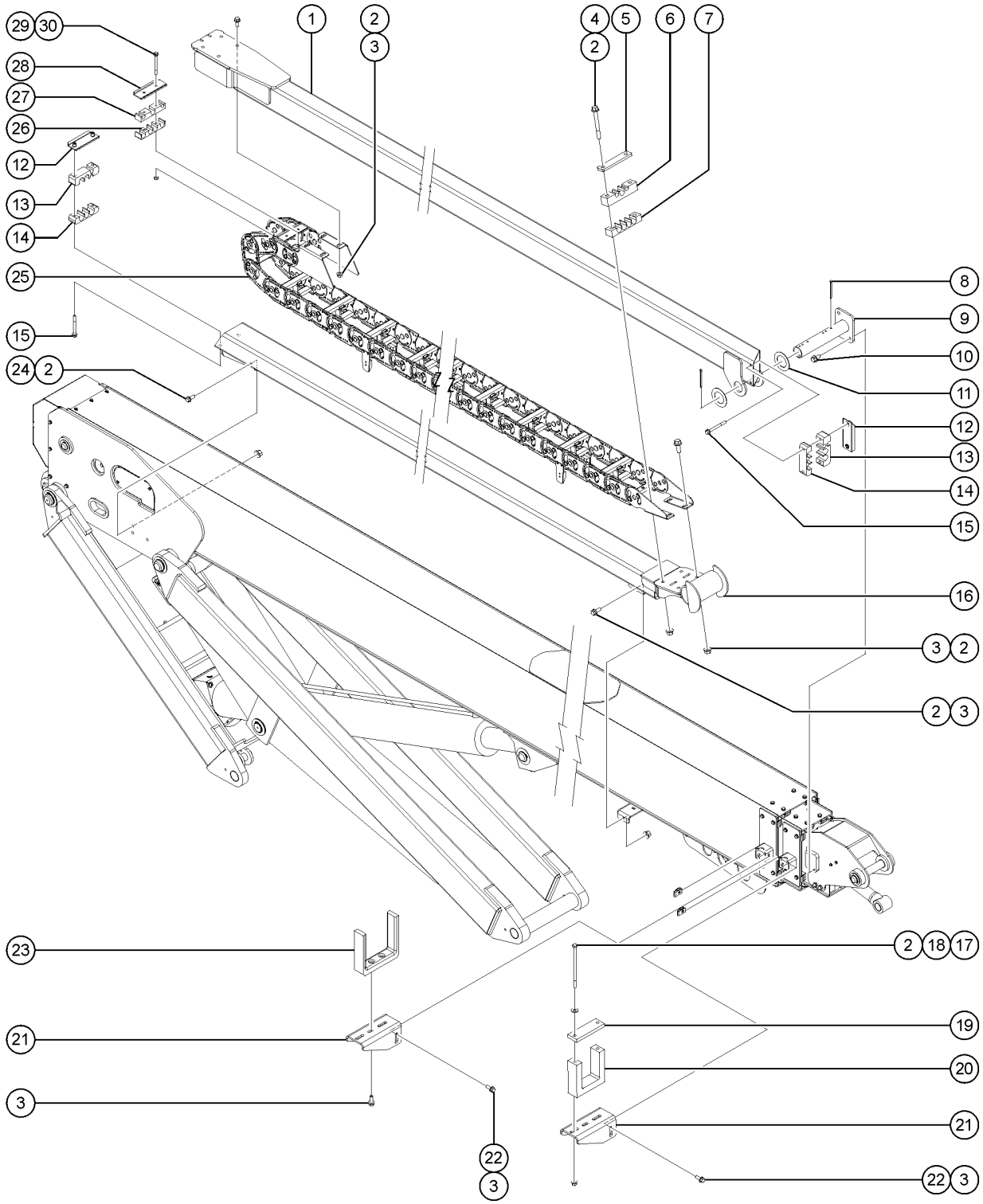

Item	Part No.	Description	Qty.
23	81340GT	WEAR PAD ASSEMBLY,CABLE TRACK	1
24	824091GT	SCREW, HHF, 3/8-16 X 1.25, 8, ZAG	2
25	1283516GT	CABLE TRACK, SX, 50 LINK, S65XC	1
25-	122663GT	END BRACKET,FIXED END	
25-	229169GT	FLATBAR, CLAMPS, CABLE TRACK	
25-	122668GT	GUIDE FINGER,PLASTIC	12
25-	218448GT	FINGER,GUIDE,CABLE TRACK On 4th link both sides	
25-	122662GT	END BRACKET,MOVING END	
25-	121065GT	FORMING,CLAMP,TOP,CABLE TRACK	
25-	122661GT	REPAIR KIT,4 LINK,W/GUIDE	1
26	1280840GT	CLAMP, HOSE, CABLE TRACK	1
27	1276451GT	CLAMP,CABLES	1
28	121065GT	FORMING,CLAMP,TOP,CABLE TRACK	1
29	824084GT	SCREW, HHF, 1/4-20 X 3, 8, ZAG	2
29B	1257867GT	SCREW,HHF,1/4-20X3.5,8,ZAG (air to platform and welder option)	2
29B-	228969GT	CLAMP, OPTION, CABLE TRACK (air to platform and welder option)	
30	1277924GT	NUT,NYLOCK FLG,1/4-20,F,ZAG	2

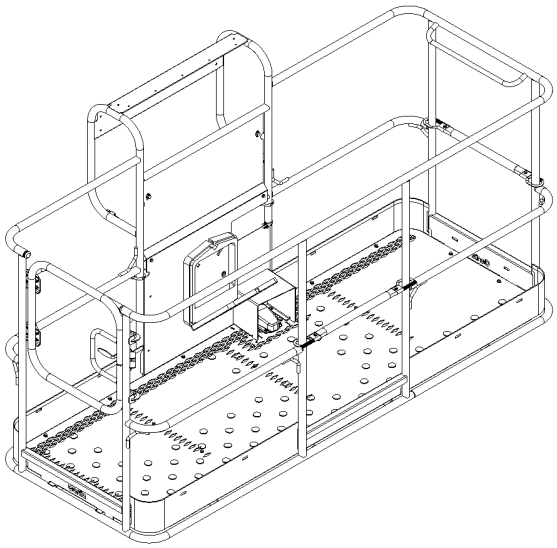

(1) Side Swing Gate Platform

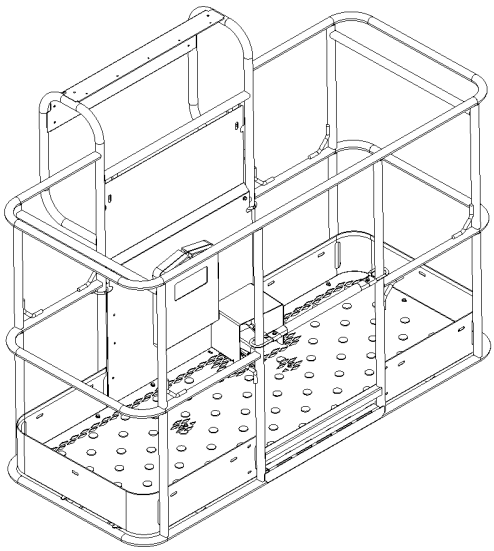

(2) Front Single Entry Platform

Item	Part No.	Description	Qty.
-		Complete Platform Assemblies with Decals	
A-		PLAT ASSY,8' W/SIDE GATE,S80/85 XC ANSI WORD USA and Canadian models	
B-		PLAT ASSY,8' W/SIDE GATE,S80/85 XC CE European models	
C-		PLAT ASSY,8' W/SIDE GATE,S80/85 XC AUS Australian models	
D-		PLAT ASSY,8' W/SIDE GATE,S80/85 XC ANSI SYM Asia and South America models	
E-		Complete Platform Assemblies and Platform Weldments without Decals (Warning tape & decals not included, refer to section 100 for decals)	
1	1272304GT	ASSY,8FT PLAT TRI LG,BLANK front and side entry	
1A-	1274859GT	ASSY,8' PLAT WELDMENT W/SIDE GATE flooring and decal plate not included	
1B	1272303GT	ASSY,6FT PLAT DUAL LG,BLANK front and side entry	
1B	1278858GT	6' PLATFORM W/SIDE SWING GATE KIT CE front and side entry	
2	160809GT	ASSY,6FT PLATFORM,NO DECALS single entry	
2A-	73900GT	WELDMNT,6 FT PLATFORM flooring and decal plate not included	

702.1 Platform Installation

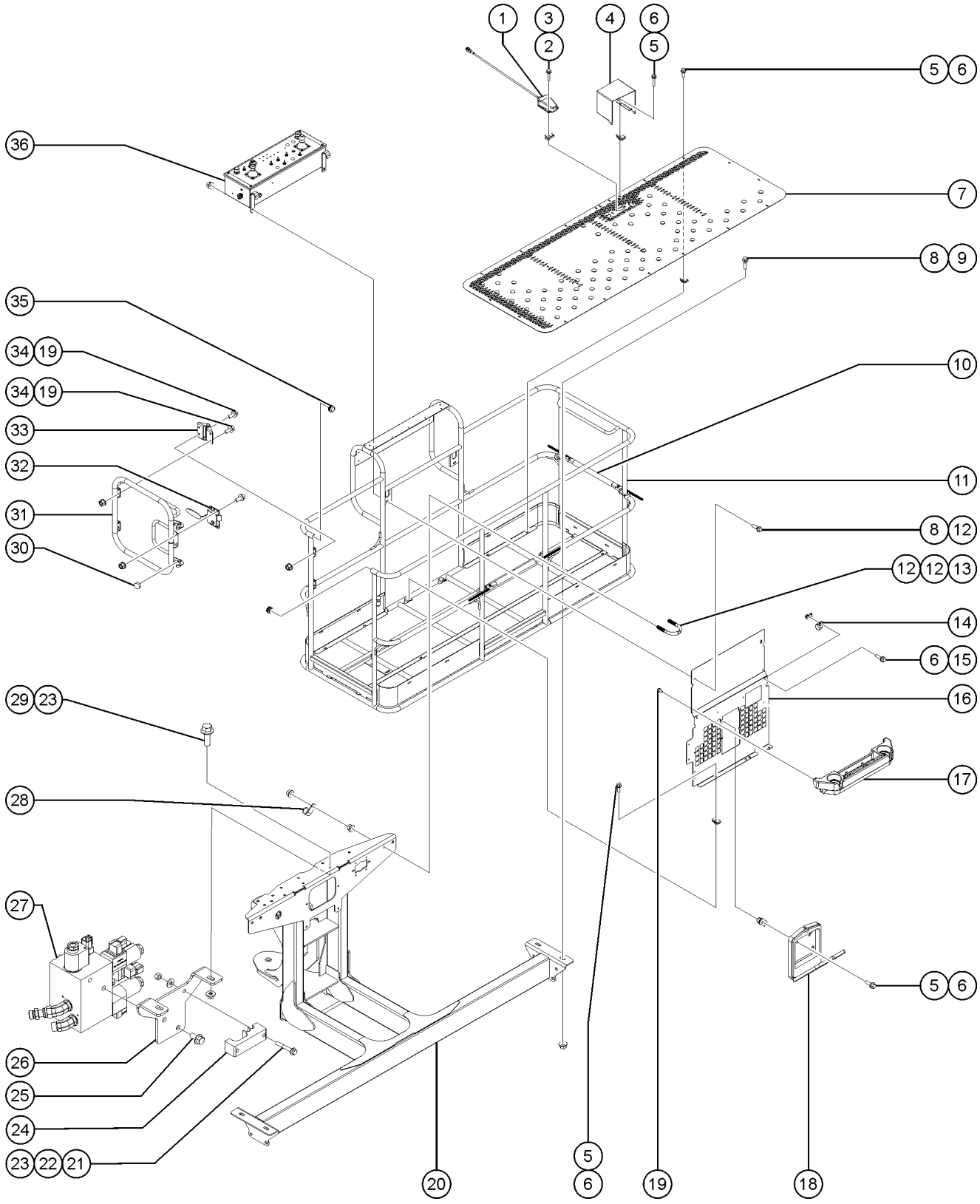

Item	Part No.	Description	Qty.
1	227618GT	ASSEMBLY,FOOTSWITCH	1
2	1269641GT	SCREW,HHF-S,10-24X1,5,ZAG	2
3	73575GT	SPRING CLIP,10-24,.025-.125X.468,ZAG	2
4	147121GT	COVER, FOOT SWITCH, LARGE	1
5	824078GT	SCREW,HHF,1/4-20X.75,8,ZAG	24
6	56912GT	SPRING CLIP,1/4-20,.025-.15X.54,ZAG	26
7	73478GT	FLOORING, 8 FT PLATFORM*** for 8' platform	1
7B	1267746GT	FLOORING, 72X30 PLATFORM for 6' platform	1
8	824091GT	SCREW, HHF, 3/8-16 X 1.25, 8, ZAG	6
9	824029GT	NUT, TL FLG, 3/8-16, G, ZAG	4
10	12448GT	SLIDING MIDRAIL ASSY-STD for 8' platform	2
10B	12448GT	SLIDING MIDRAIL ASSY-STD for 6' platform	2
11	1273564GT	OPTION,8PLATFORM W/SIDE SWING GATE for 8' platform (includes item 10)	1
11B	1273563GT	OPTION, 6' PLATFORM W/SIDE SWING GATE, Z80 for 6' platform (includes item 10)	1
12	1274322GT	NUT,NYLOCK FLG,3/8-16,F,ZAG	6
13	1251600GT	U-BOLT, FLATTENED, 1.5DIA. X 3/8 UNC,ZAG	2
14	56424GT	CLAMP,1.25X.5 RUBBER-CUSHION	2
15	824079GT	SCREW,HHF,1/4-20X1,8,ZAG	2
16	1275088GT	FORMING, ALUM. DECAL PLATE	1
17	1275089GT	KIT, PLATFORM WORK TRAY (use until exhausted) Replaced by 1289552	1
17-	824225GT	SCREW,FHPM,10-32X.75,ZAG	1
17B	1289552GT	KIT, PLATFORM WORK TRAY	1
18	24514GT	BOX, INSTRUCTION STORAGE**	1
19	1256855GT	SCREW,HHF,1/4-20X.625,8,ZAG	16
20	1273734GT	WELDMENT,PLAT SUPPORT,15K,LS	1
21	824082GT	SCREW, HHF, 1/4-20 X 1.75, 8, ZAG	2
22	824113GT	WASHER,FLAT,USS,1/4,ZAG	2
23	1274165GT	NUT,NYLOCK,1/4-20,C,ZAG	4

702.1 Platform Installation

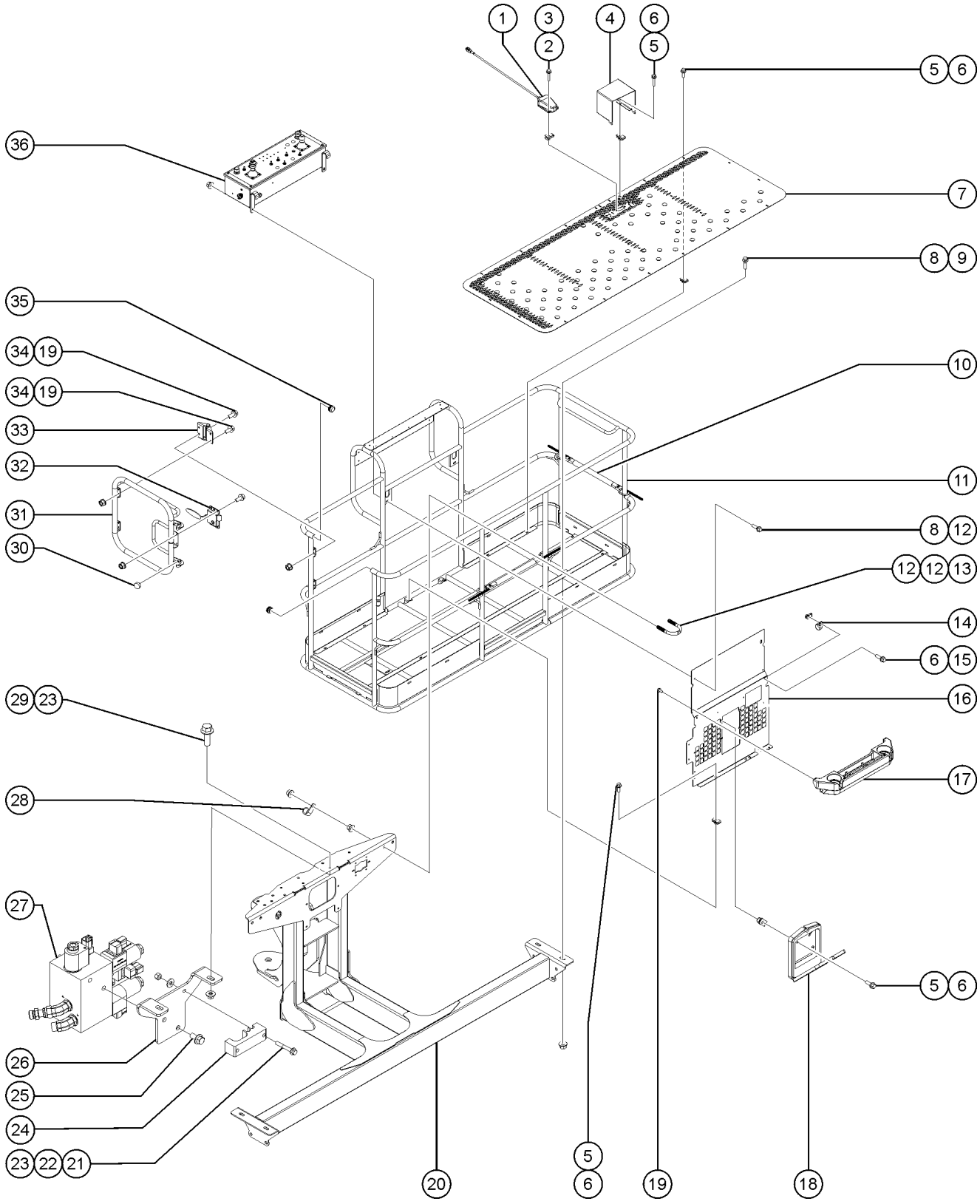

Item	Part No.	Description	Qty.
24	121582GT	CLAMP,CABLE STRAIN RELIEF	1
25	824089GT	SCREW, HHF, 3/8-16 X .75, 8, ZAG	2
26	1303426GT	PLATE, PLATFORM MANIFOLD	1
27		Ref. MANIFOLD, PLATFORM, E-LEVEL, JIB (refer to 404.1)	
28	67897GT	CLAMP,0.56,#9 X 3/8,RUB CUSH	1
29	824078GT	SCREW,HHF,1/4-20X.75,8,ZAG	2
30	43392GT	BUMPER,BATTERY BOX & RAILS	2
31	1265397GT	WELDMENT, SWING GATE	1
32	1267747GT	LATCH, SWING GATE	1
33	104804GT	HINGE, SPRING, LONG LEG	2
34	1277924GT	NUT,NYLOCK FLG,1/4-20,F,ZAG	12
35	55753GT	BUMPER, PLASTIC, 1.25 O.D.	2
36		Ref. PLATFORM CONTROL BOX ASSEMBLY (refer to 702.1)	

703.1 Platform Control Box

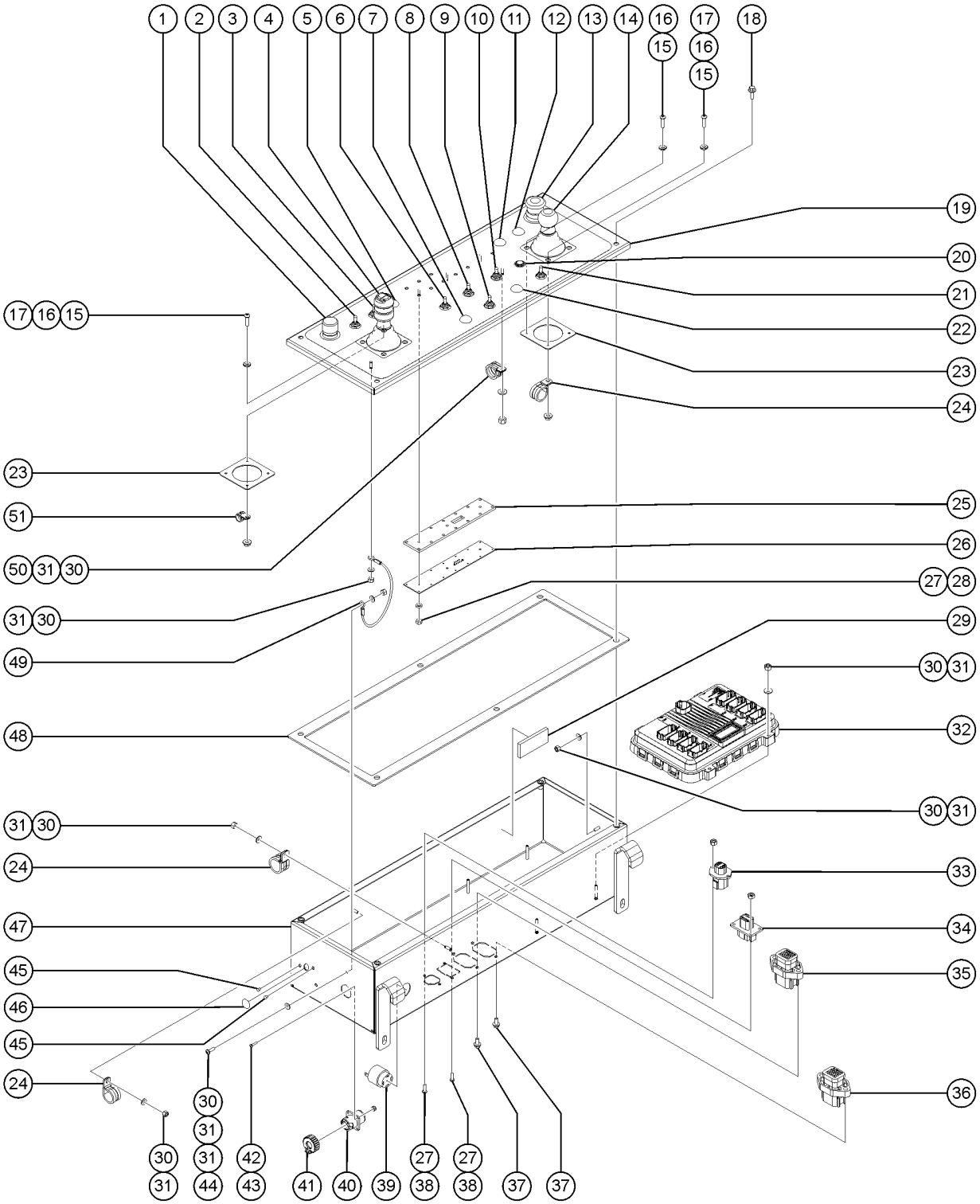

Item	Part No.	Description	Qty.
A	1306210GT	ASSEMBLY, PBOX, S-BOOM, XC, EPL (only S60XC)	1
B	1313760GT	ASSEMBLY, PBOX, S-BOOM, JIB, S65/85XC (only S65XC)	1
1	66813GT	BUTTON,PUSH,BLACK W/SEAL*** horn	1
1-	66815GT	BASE, W/1 N.O. CONTACTS***	
2	128200GT	SWITCH TOGGLE ASSY SPDT 3P MOM platform level	1
3	128200GT	SWITCH TOGGLE ASSY SPDT 3P MOM platform rotate	1
4		REF. JOYSTICK (refer to 703.1)	
5	229567GT	PLUG,SANTOPRENE .5 BLACK DOME (only S60XC)	1
5B	128200GT	SWITCH TOGGLE ASSY SPDT 3P MOM jib up/down (only S65XC)	1
6	128200GT	SWITCH TOGGLE ASSY SPDT 3P MOM engine start	1
7	128584-SGT	SWITCH TOGGLE SPDT 2P MNT SHDR fuel select GAS/LPG models	
7B	229567GT	PLUG,SANTOPRENE .5 BLACK DOME diesel models	1
8	128203GT	SWITCH TOGGLE ASSY SPDT 2P MOM emergency power	1
9	128204GT	SWITCH TOGGLE ASSY SPDT 2P MNT engine RPM	1
10	128204GT	SWITCH TOGGLE ASSY SPDT 2P MNT drive select	1
11	229567GT	PLUG,SANTOPRENE .5 BLACK DOME generator switch (if equipped)	1
12	229567GT	PLUG,SANTOPRENE .5 BLACK DOME aircraft protection (if equipped)	1
13	66812GT	BUTTON,PUSH,RED MUSHROOM HEAD emergency stop switch	1
13-	146478GT	BOOT(BELLOWS),E-STOP,BLACK	
13-	66817GT	E-STOP W/ NC CONTACT	
14		REF. JOYSTICK (refer to 703.1)	
15	139338GT	SCREW PH M5-0.8X20 DIN 7500CE	8
16	1269498GT	SHOULDER WASHER, NYLON	8
17	1255753GT	NUT,FLG,M5-0.8,DIN6923,8,ZAB	2
18	824078GT	SCREW,HHF,1/4-20X.75,8,ZAG	4
19	1282472GT	WELDMENT, LID, CONTROLS, PLATFORM	1
20	218165GT	LIGHT,INDICATOR,RED 12V H-BRI drive enable indicator light	1
21	128200GT	SWITCH TOGGLE ASSY SPDT 3P MOM drive enable indicator switch	1

703.1 Platform Control Box

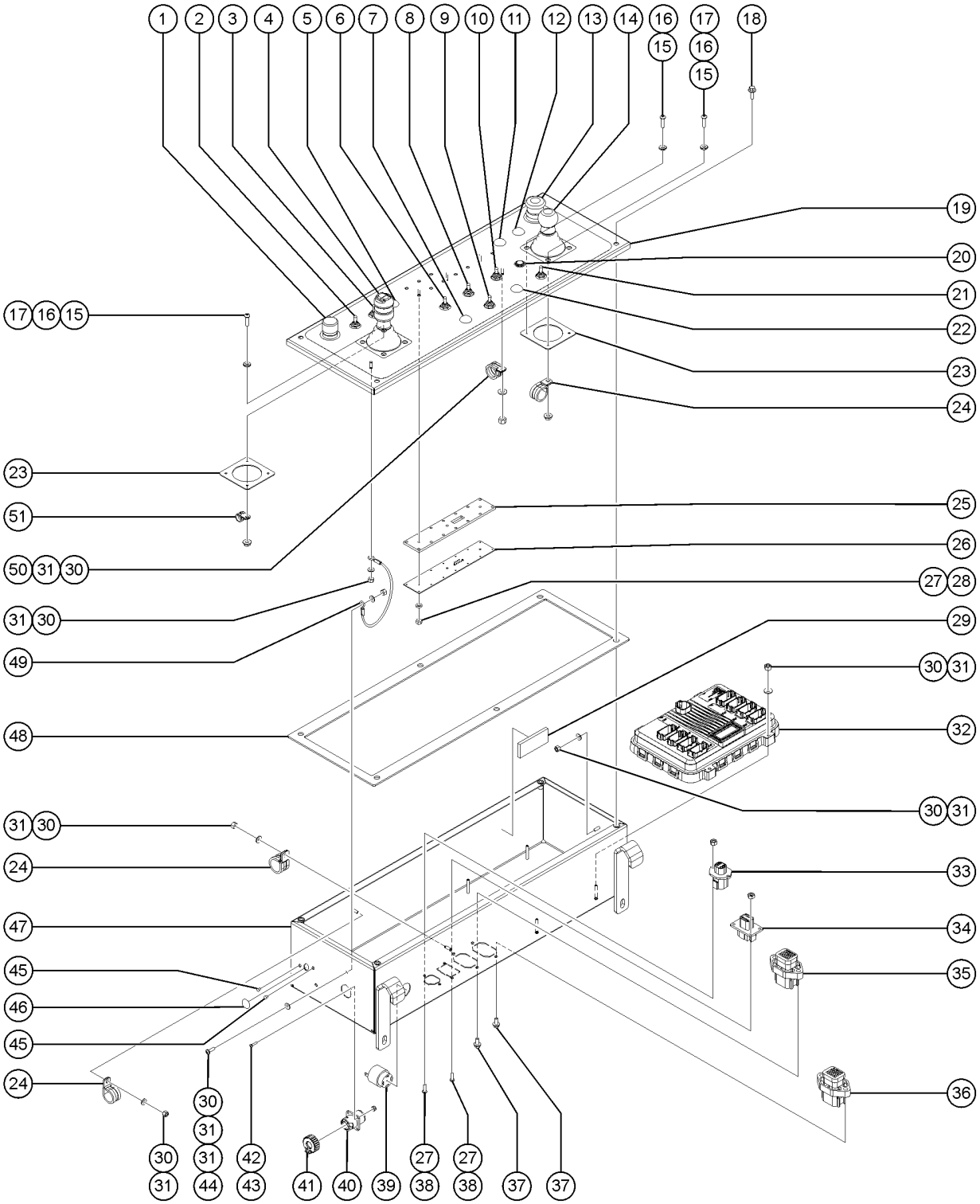

Item	Part No.	Description	Qty.
22	229567GT	PLUG,SANTOPRENE .5 BLACK DOME	1
23	1269497GT	GASKET, ISOLATION, JOYSTICK	2
24	18666GT	CLAMP,1.00,#16 X 1/4,RUB CUSH	3
25	1278613GT	SPACER, XC PLATFORM INDICATORS	1
26	1278612GT	PCBA, XC PLATFORM INDICATORS	1
27	1274164GT	NUT,NYLOCK,6-32,A,ZAG	7
28	822224GT	WASHER, NYLON #10, 0.093	3
29	30997GT	CORROSION INHIBITOR,FOAM to SN S65XCH-49371	1
30	1274168GT	NUT,NYLOCK,10-32,A,ZAG	12
31	1253185GT	WASHER,FLAT,#10,USS,ZAG	13
32	1284524GT	ECU, PLATFORM, S-XC, PROGRAMMED	1
33	73717GT	CONN, RECEP, 4 WAY, DEUTSCH, DTP, FLANGE	1
34	87755GT	CONN, RECEP, 8 WAY, DEUTSCH, DT, GRAY/FLANGE	1
35	1265862GT	CONN, RECEP, 18 WAY, DEUTSCH, DTV, GRAY/FLANGE	1
36	226948GT	CONN, RECEP, 18 WAY, DEUTSCH, DTV, BLACK/FLANGE	1
37	218457GT	SCREW,HHF,M5X12,DIN6921,10.9,Z	4
38	824214GT	SCREW,PHPM,6-32X.50,ZAG	4
39	39540GT	ALARM, STEADY TONE***	1
40	1272122GT	CONN, RECEP, 5 WAY, DEUTSCH, HD10	1
41	1272123GT	DUST CAP, RECEPTACLE, 5 WAY, CIRCULAR	1
42	1253477GT	SCREW,PHPM,4-40X.5,ZAG	2
43	40766GT	NUT,NYLOCK,4-40	2
44	1257227GT	SCREW,PHPM,10-32X.625,ZAG	1
45	42781GT	PLUG, NYLON .250 BLACK DOMED to SN S60XCH-699, to SN S65XCH-50026	4
45B	1323761GT	PLUG, NYLON 5.5MM BLACK DOMED from SN S60XCH-700, from SN S6XCH-50027	4
46	229567GT	PLUG,SANTOPRENE .5 BLACK DOME	2
47	1279851GT	WELDMENT,BOX,PLATFORM CONTROL,XC	1
48	81488GT	GASKET,PLATFORM CONTROL BOX	1

703.1 Platform Control Box

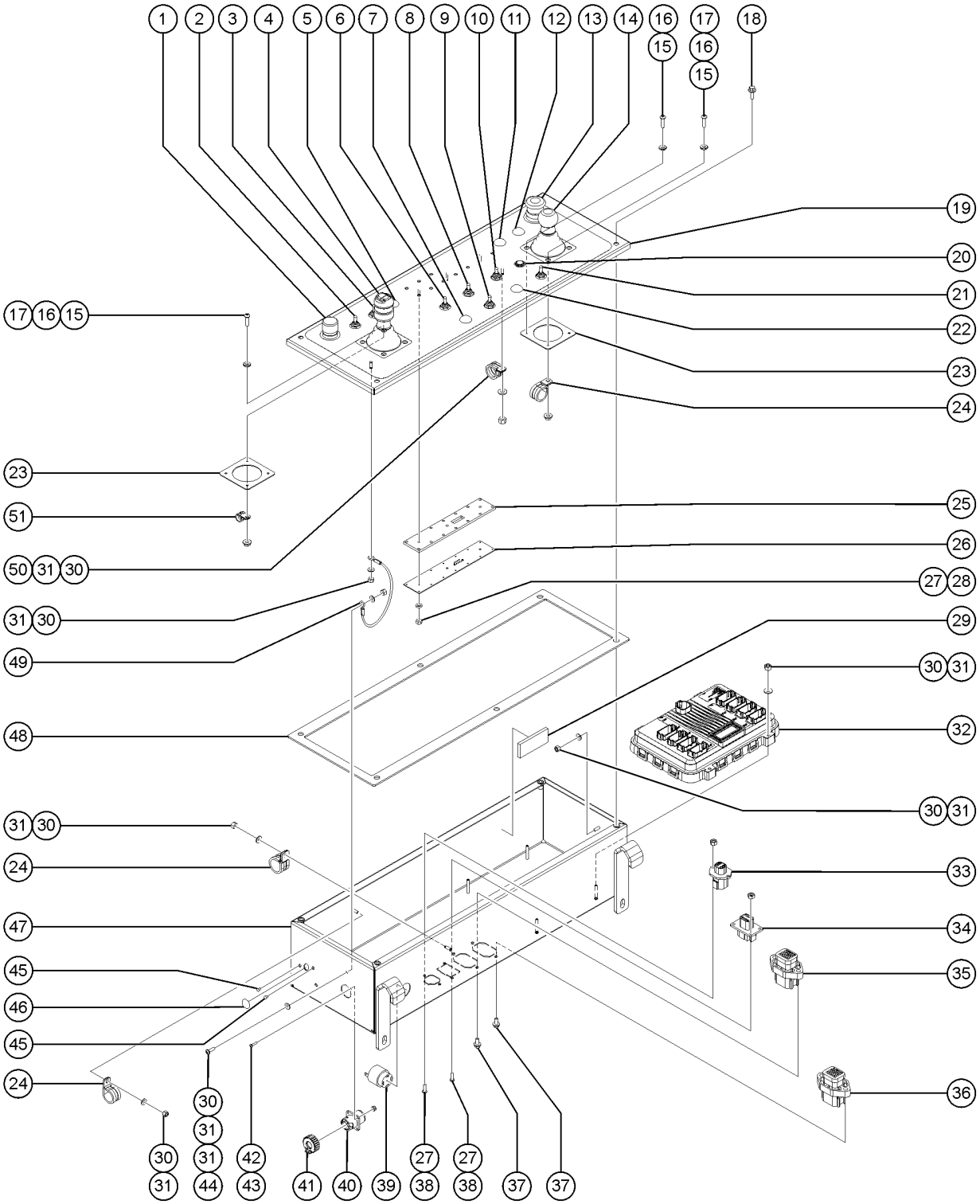

Item	Part No.	Description	Qty.
49	1258952GT	LANYARD, BOX, CONTROL, PLATFORM	2
50	13268GT	CLAMP,0.75,#12 X 1/4,RUB CUSH	1
51	6833GT	CLAMP,0.50,#8 X 1/4,RUB CUSH	1

704.1 Joysticks

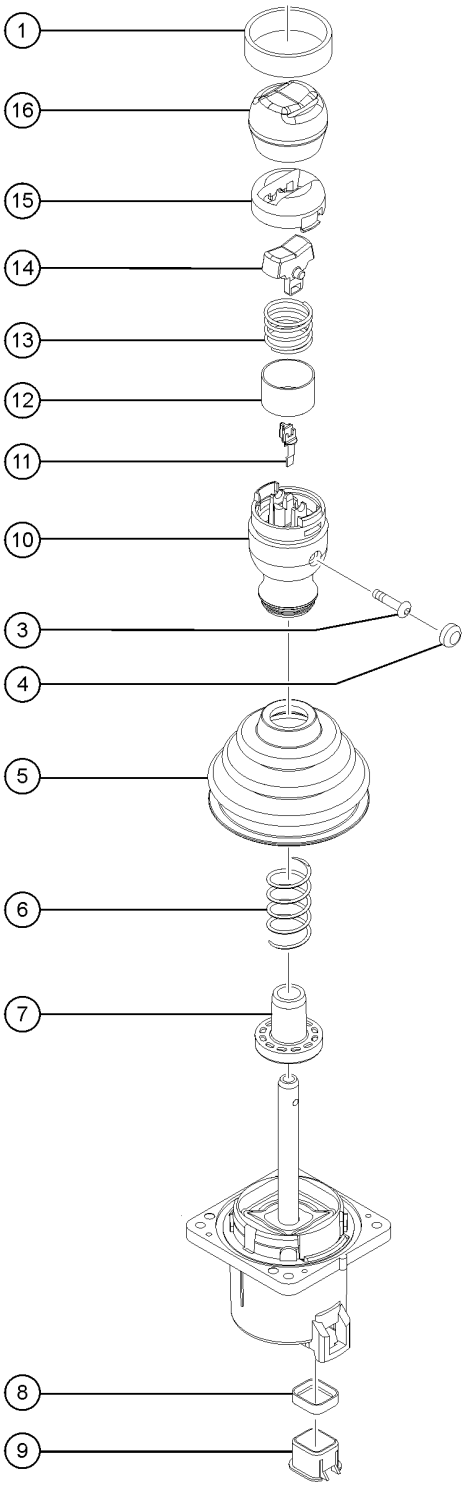

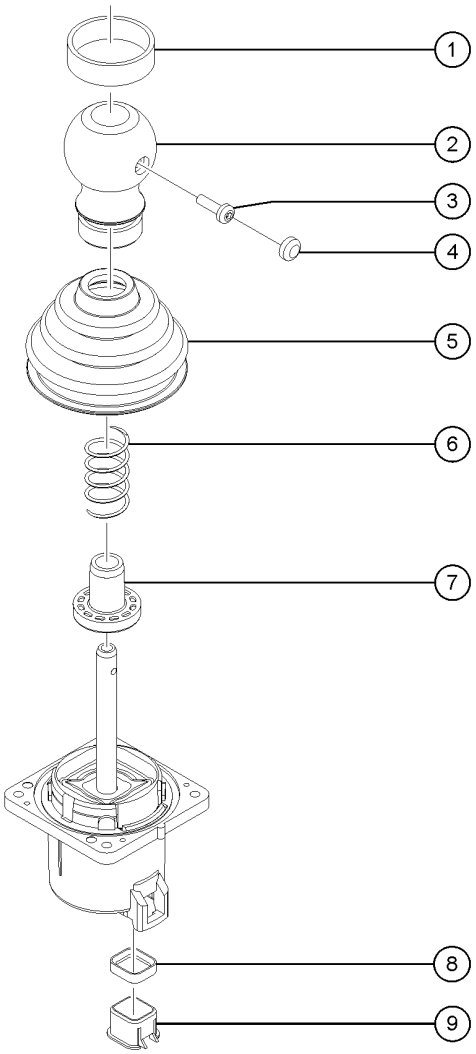

Item	Part No.	Description	Qty.
A-	1275259GT	JOYSTICK, ISOLATED, 2 AXIS ROCKER OEM joystick (calibration required after replacement)	1
B-	1275248GT	JOYSTICK, ISOLATED, 2 AXIS OEM joystick (calibration required after replacement)	1
C-	1275258GT	JOYSTICK, ISOLATED, 1 AXIS ROCKER OEM joystick (calibration required after replacement)	1
D-	83098GT	TERM,AMP MTE,SOC,22-26 GA BULK	
1	1271713GT	SHRINK TUBE, BLU, 3:1, 40MM	2
2	62392GT	KNOB,JOYSTICK, 62390/62391	1
3	T112626GT	SCREW, PHM, #6-32 X .625 ZINC	1
4	1269499GT	PLUG, JOYSTICK HANDLE	2
5	139598GT	BOOT,JOYSTICK	1
6		SPRING,JOYSTK CENTR,62390/91 (no longer available from supplier)	
7	119915GT	COLLAR,JOYSTICK,CENTER	1
8	128000GT	SEAL, CONNECTOR (DT JOYSTICKS)	1
9	128001GT	SLEEVE,CONNECTOR,DT JOYSTICKS	1
10	75449GT	KNOB,ROCKER JOYSTICK 75565	1
11	75448GT	SUPPORT,SENSOR,JOYSTICK	1
12	75447GT	SWITCH SHIELD,ROCK JOYSTK75565	1
13	75446GT	SPRING,SWITCH CENTERING,75565	1
14	75445GT	ROCKER ASSY.,MAGNETIC 75565	1
15	75444GT	ROCKER,RETAINER, 75565	1
16	75443GT	BOOT, ROCKER JOYSTICK 75565	1

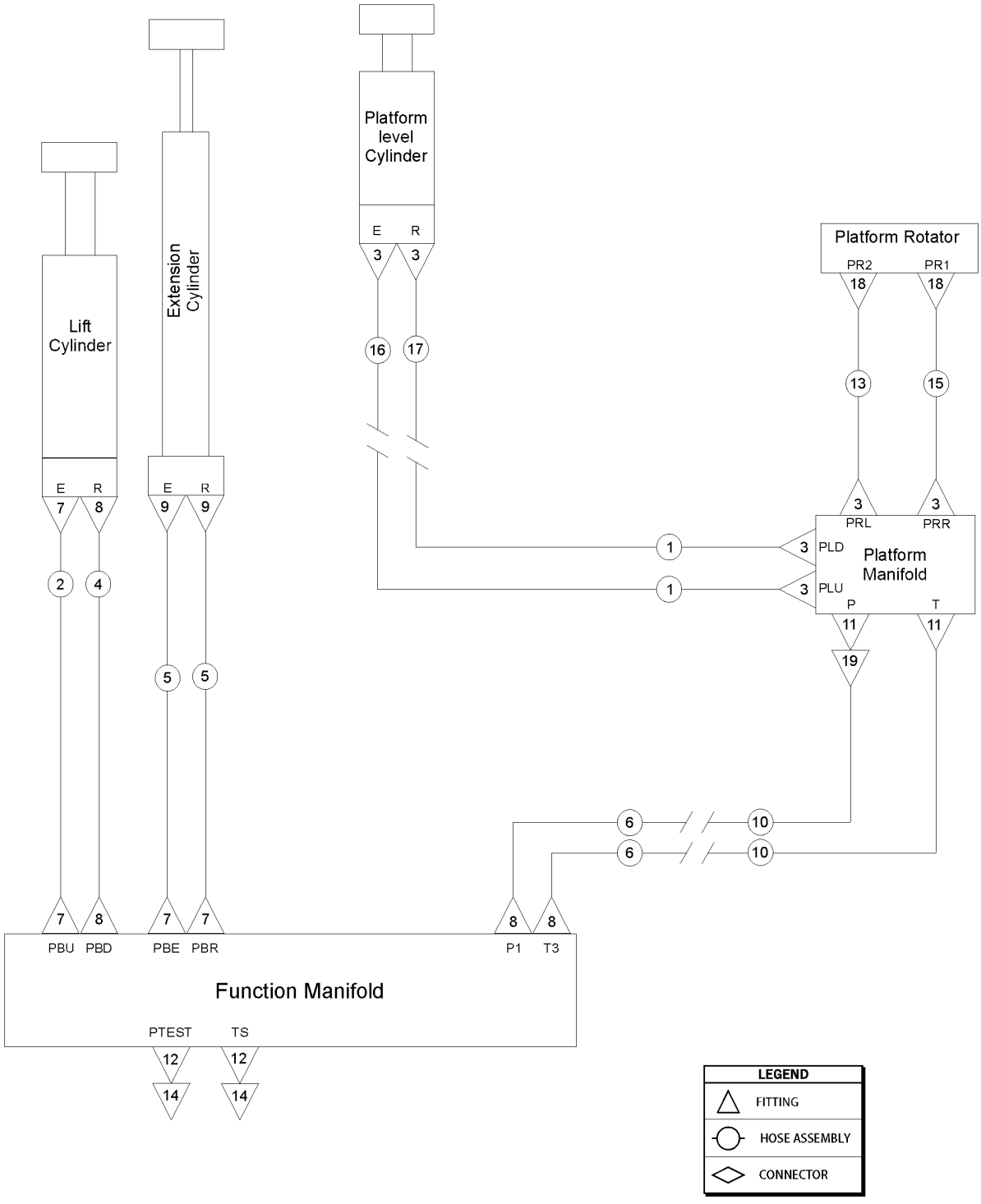
Platform level Cylinder
E R
3 3
16 17
Platform Rotator
PR2 PR1
18 18
13 15
Extension Cylinder
Lift Cylinder
E R
7 8
9 9
2 4
5 5
3 3
PRL PRR
1 3 PLD
1 3 PLU
Platform Manifold
P T
11 11
19
6 10
6 10
7 8 7 7 8 8
PBU PBD PBE PBR P1 T3
Function Manifold
PTEST TS
12 12
14 14
LEGEND
FITTING
HOSE ASSEMBLY
CONNECTOR

Item	Part No.	Description	Qty.
A		The hose lengths below reflect the length of the hose only. Refer to the 'Fittings Cross Reference' to match Genie part numbers to Parker part numbers.	
B	48767GT	SLEEVE,NYLON,1.42 ID protective hose sleeve, 1.42" diameter (near platform rotator)	
C	49219GT	SLEEVE,NYLON,2.19 ID,BULK protective hose sleeve, 2.19" diameter (near platform rotator)	
1	49117-4883GT	HOSE ASSY,1/4,90 FEM,STR FEM Components: Genie part numbers 48800, 48802 and 48751 @ 135.43 inches	2
2	49143-12329GT	HOSE ASSY,1/2,90 FEM,STR FEM	1
3	48905GT	CONNECTOR, 520120-4	6
4	49128-12309GT	HOSE ASSY,3/8,STR FEM,STR,90D	1
5	49183-13492GT	HOSE ASSY,1/2,STR FEM,STR FEM	2
6	1288890-9450GT	HOSE ASSY,3/8,STR FEM,BULKHEAD Components: Genie part numbers 48812, 89551 and 48753 @ 94.50 inches	2
7	48933GT	CONN,520120-8***	4
8	48916GT	CONN, 520120-6	4
9	48937GT	ELBOW,45D,520320-8	2
10	49130-75787GT	HOSE ASSY,3/8,STR FEM,STR FEM, 757.87 Components: Genie part numbers 48812, 48812 and 48753 @ 757.87 inches	2
11	48920GT	ELBOW,45D,520320-6	2
12	48997GT	NIPPLE,DIAGNOSTIC,#4	2
13	49116-2637GT	HOSE ASSY,1/4,45 FEM,STR FEM	1
14	48880GT	CAP,DIAGNOSTIC NIPPLE	2
15	49116-2437GT	HOSE ASSY,1/4,45 FEM,STR FEM	1
16	77310-1575GT	HOSE ASSY,-4,STR FEM,BULKHEAD	1
17	77310-1693GT	HOSE ASSY,-4,STR FEM,BULKHEAD	1
18	48907GT	ELBOW,45D,520320-4	2
19	1297451GT	FITTING, ORFS, STR, 125 MICRON SCREEN, SAE -6	1

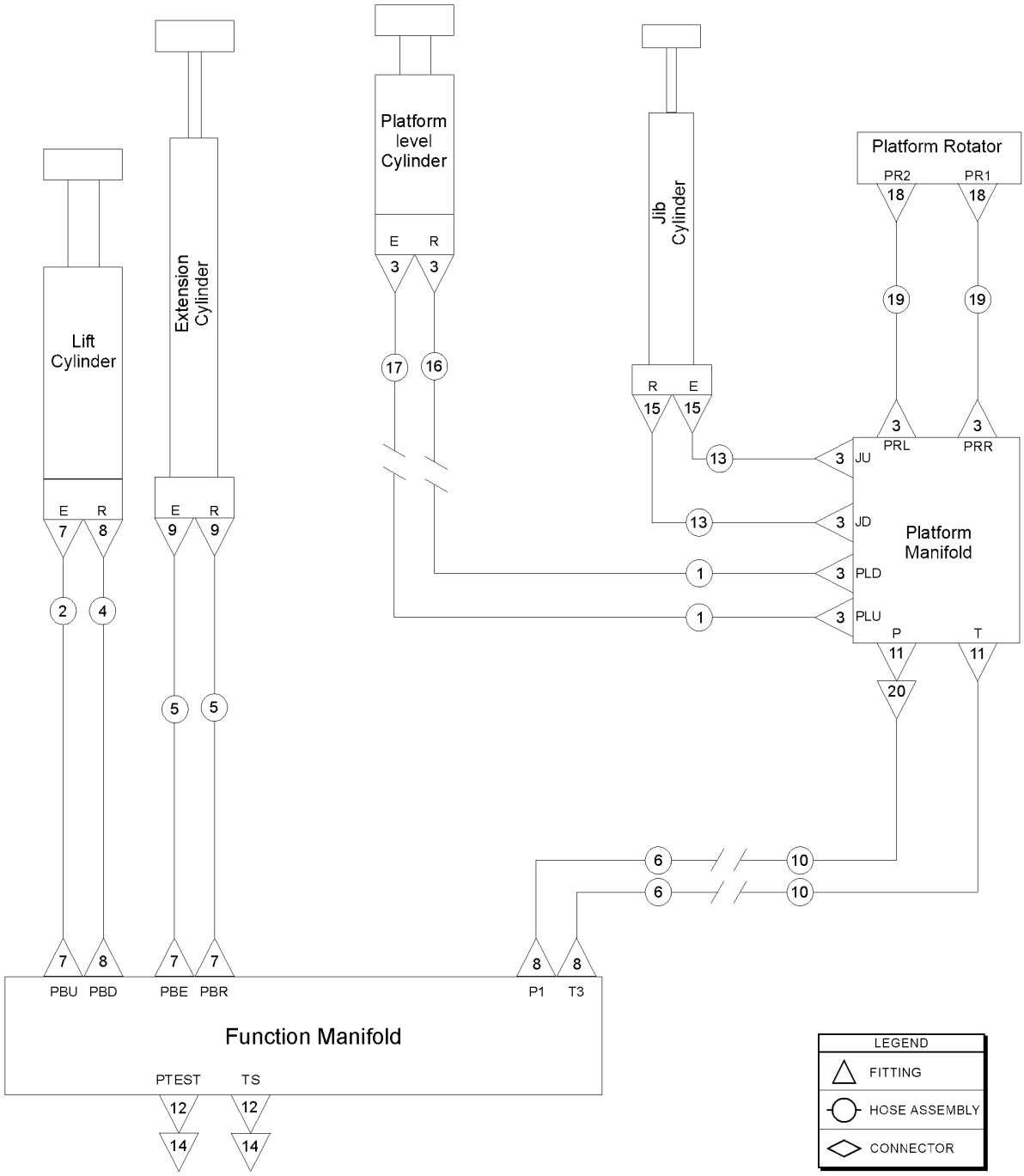
Platform level Cylinder
Jib Cylinder
Platform Rotator
PR2
PR1
Lift Cylinder
Extension Cylinder
E
R
3
17
16
15
19
18
13
JU
JD
PLD
PLU
PRL
PRR
Platform Manifold
P
T
11
20
1
2
4
5
9
7
8
6
10
PBU
PBD
PBE
PBR
P1
T3
Function Manifold
PTEST
TS
12
14
LEGEND
FITTING
HOSE ASSEMBLY
CONNECTOR

Item	Part No.	Description	Qty.
A		The hose lengths below reflect the length of the hose only. Refer to the 'Fittings Cross Reference' to match Genie part numbers to Parker part numbers.	
B	48767GT	SLEEVE,NYLON,1.42 ID protective hose sleeve, 1.42" diameter (near platform rotator)	
C	49219GT	SLEEVE,NYLON,2.19 ID,BULK protective hose sleeve, 2.19" diameter (near platform rotator)	
1	49117-13543GT	HOSE ASSY,1/4,90 FEM,STR FEM Components: Genie part numbers 48800, 48802 and 48751 @ 135.43 inches	2
2	49143-12329GT	HOSE ASSY,1/2,90 FEM,STR FEM	1
3	48905GT	CONNECTOR, 520120-4	8
4	49128-12309GT	HOSE ASSY,3/8,STR FEM,STR,90D	1
5	49183-13492GT	HOSE ASSY,1/2,STR FEM,STR FEM	2
6	1288890-9450GT	HOSE ASSY,3/8,STR FEM,BULKHEAD Components: Genie part numbers 48812, 89551 and 48753 @ 94.50 inches	2
7	48933GT	CONN,520120-8***	4
8	48916GT	CONN, 520120-6	4
9	48937GT	ELBOW,45D,520320-8	2
10	49130-83858GT	HOSE ASSY,3/8,STR FEM,STR FEM Components: Genie part numbers 48812, 48812 and 48753 @ 838.58 inches	2
11	48920GT	ELBOW,45D,520320-6	2
12	48997GT	NIPPLE,DIAGNOSTIC,#4	2
13	49119-4878GT	HOSE ASSY,1/4,STR FEM,STR FEM	2
14	48880GT	CAP,DIAGNOSTIC NIPPLE	2
15	48912GT	CONN,520120-4-6***	2
16	77310-1693GT	HOSE ASSY,-4,STR FEM,BULKHEAD	1
17	77310-1575GT	HOSE ASSY,-4,STR FEM,BULKHEAD	1
18	48907GT	ELBOW,45D,520320-4	2
19	49119-2878GT	ASSY, HOSE, HYD, -4, 3250, STR, STR	2
20	1297451GT	FITTING, ORFS, STR, 125 MICRON SCREEN, SAE -6	1

803.1 Turntable Components

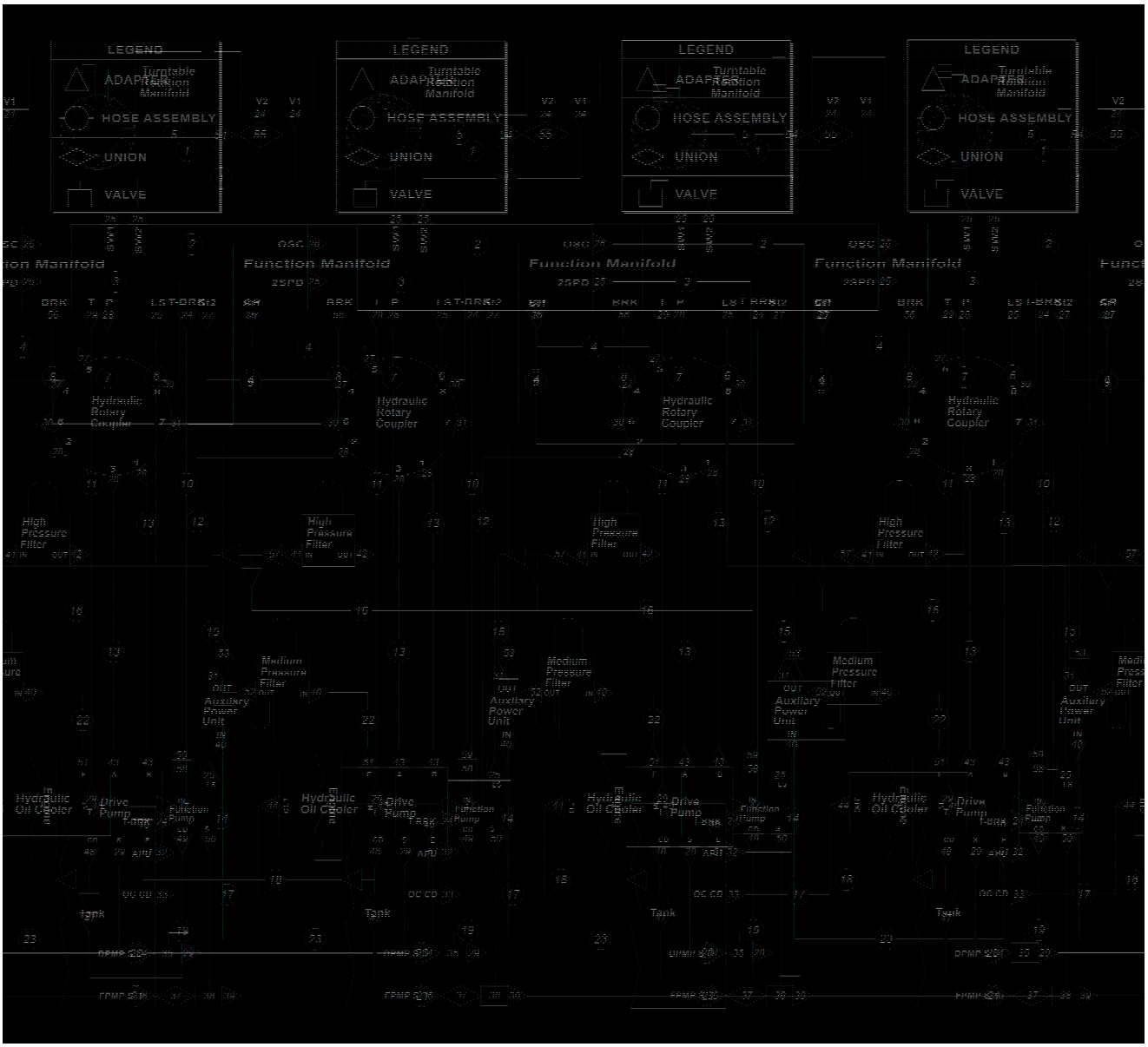

Item	Part No.	Description	Qty.
A		The hose lengths below reflect the length of the hose only. Refer to the 'Fittings Cross Reference' to match Genie part numbers to Parker part numbers.	
1	49117-7480GT	HOSE ASSY,-4,STR FEM,90 FEM	2
2	49130-5906GT	HOSE ASSY,-6,STR FEM,STR FEM	1
3	49119-6890GT	HOSE ASSY,-4,STR FEM,STR FEM	1
4	49130-5782GT	HOSE ASSY 3/8, STR FEM,STR FEM	2
5	49176-8638GT	HOSE ASSY,-4,STR FEM,90 FEM	1
6	49119-7283GT	HOSE ASSY,-4,STR FEM,STR FEM	1
7	61074-7254GT	HOSE ASSY,-12,STR FEM,90 FEM	1
8	49119-7480GT	HOSE ASSY,1/4,STR FEM,STR FEM, 74.80	1
9	49117-8858GT	HOSE ASSY,-4,STR FEM,90 FEM	1
10	49117-2913GT	HOSE ASSY,-4,STR FEM,90 FEM	1
11	88949-3828GT	HOSE ASSY 1",STR FEM,STR FEM	1
12	49150-7283GT	HOSE ASSY,-12,STR FEM,STR FEM	1
13	94374-6421GT	HOSE ASSY,-12,STR FEM,90 FEM to SN S65XCH-49969	2
13B	89871-6421GT	HOSE ASSY,3/4,STR FEM,STR FEM from SN S65XCH-49970	2
14	94465-3650GT	HOSE ASSY,1/2"	1
15	49128-6299GT	HOSE ASSY,-6,90 FEM,STR FEM	1
16	61073-3730GT	HOSE ASSY,3/4" 90 FEM STR FEM	1
17	88942-4331GT	HOSE ASSY,-16,STR FEM,90 FEM	1
18	88942-10827GT	HOSE ASSY,-16,STR FEM,90 FEM	1
19	49150-2756GT	HOSE ASSY,-12,STR FEM,90 FEM	1
20	88942-8354GT	HOSE ASSY,1",90 FEM,STR FEM	1
21	1288891-8268GT	HOSE ASSY,-20,STR FEM,90 FEM	1
22	49143-3629GT	HOSE ASSY,1/2,90 FEM,STR FEM	1
23	49143-3429GT	HOSE ASSY,1/2,90 FEM,STR FEM	1
24	48912GT	CONN,520120-4-6***	4
25	48905GT	CONNECTOR, 520120-4	7
26	48930GT	FITTING,CONN,520120-6-8***	1

803.1 Turntable Components

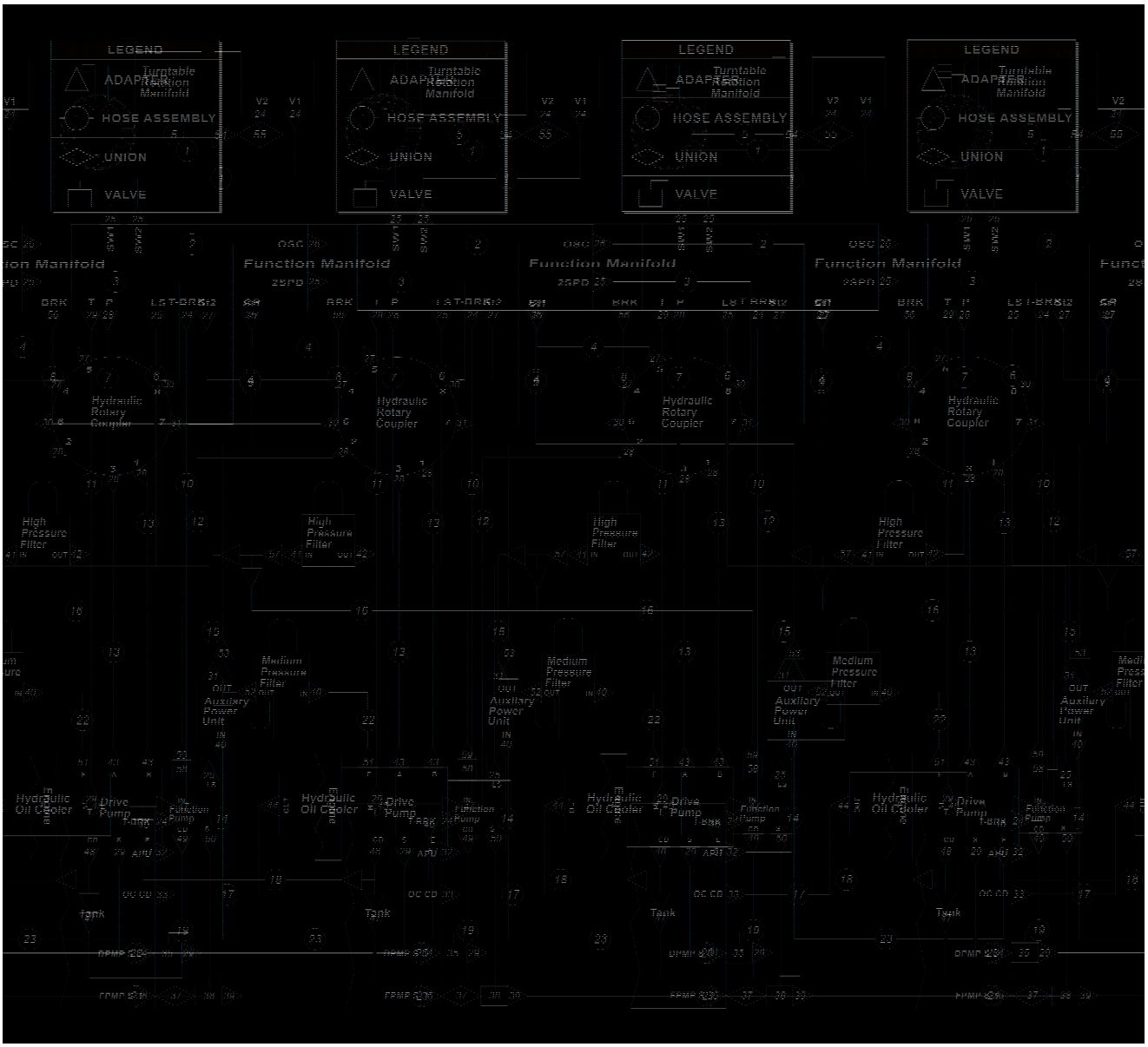

Item	Part No.	Description	Qty.
27	48916GT	CONN, 520120-6	4
28	48960GT	FITTING,CONN,520120-12***	4
29	48984GT	CONN, 520120-16	4
30	48904GT	ELBOW, 90D, 520220-4	2
31	48915GT	ELBOW,90D,520220-6	2
32	48943GT	FITTING,CONN,520120-8-6	1
33	48959GT	FITTING,ELBOW,90D,520220-12	1
34	101490GT	STRAINER,16 SAE F/24 SAE M	1
35	48996GT	VALVE, BALL, 16 MSAE-16 FSAE	1
36	101491GT	STRAINER,20 SAE F/24 SAE M***	1
37	61263GT	UNION,STR.THREAD 20	1
38	101494GT	VALVE,BALL,FSAE-20,FSAE-20	1
39	75654GT	CONN,520120-20	1
40	48932GT	FITTING,ELBOW,90D,520220-8***	2
41	48961GT	TEE,RUN,520428-12	1
42	48963GT	FITTING,ELBOW,45D,520320-12***	1
43	48977GT	CONN,520120-12-16 to SN S65XCH-49254	2
43B	48976GT	ELBOW,90D,520220-12-16 from SN S65XCH-49255	2
44	49519GT	CONN,520120-16-12	1
45	48878GT	ELBOW,90D,520220-16-12	1
46	42787GT	TEE,RUN,SWIVEL,520432-16	1
47	101293GT	REDUCER,520123-16-12	2
48	1283576GT	TEE, BRANCH, -16M-16F-16M, ORFS	1
49	48975GT	CONN,520120-12-10	1
50	1276485GT	CONN.520120-20-24	1
51	48946GT	CONN,520120-8-10	2
52	48936GT	TEE,BRANCH,520429-8	1
53	48941GT	REDUCER,520123-8-4	1

803.1 Turntable Components

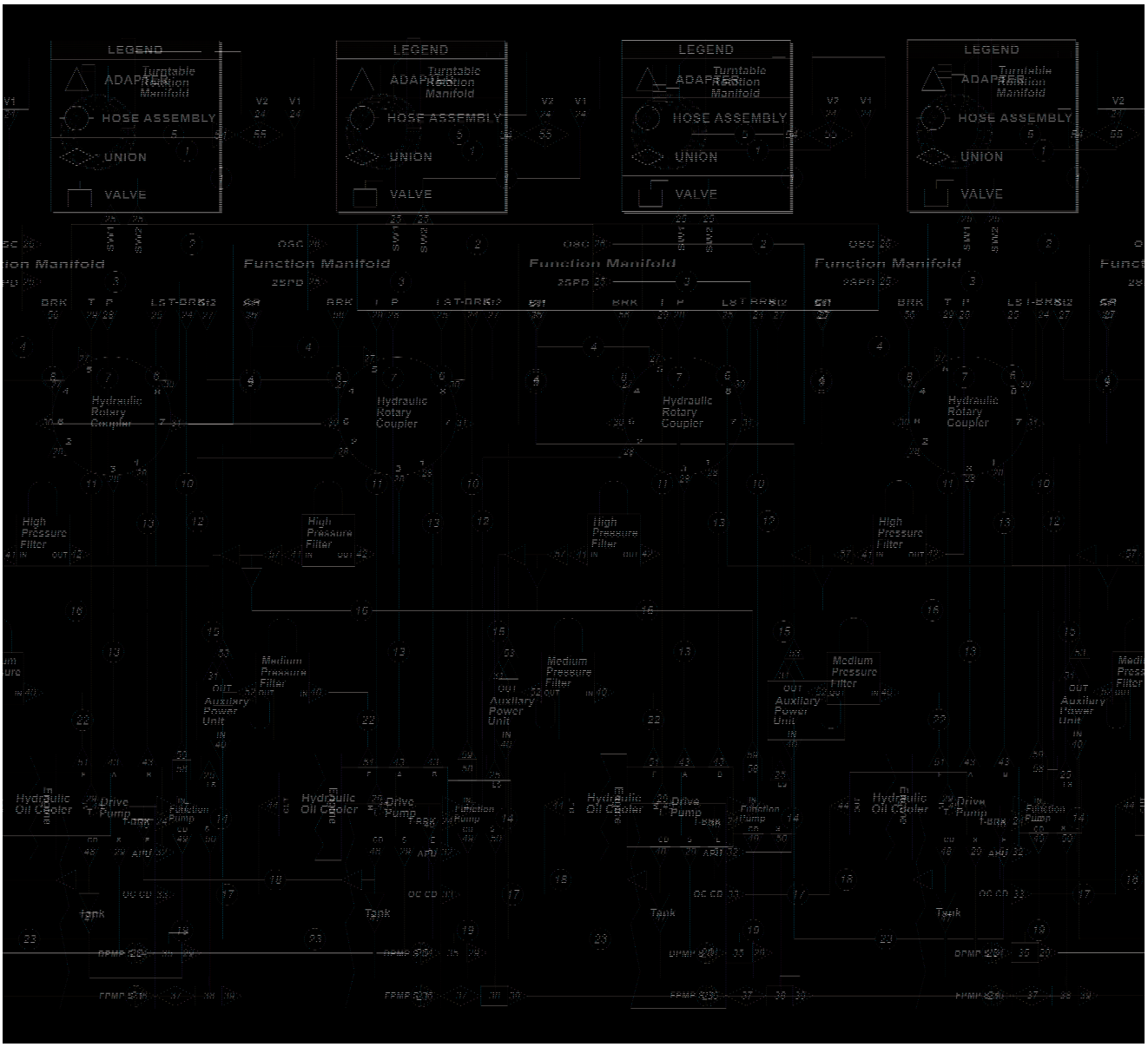

Item	Part No.	Description	Qty.
54	48885GT	CONNECTOR,BULKHEAD,FEMALE-4	1
55	94643GT	ZERK,GREASE,5/16-24,STRAIT	1
56	48905GT	CONNECTOR, 520120-4	1
57	87033GT	REDUCER,520123-12-6	1
58	48898GT	VALVE,CHK,#12PORT-#12MALEORFS	1
59	1305366GT	CONN,520120-12-6	1

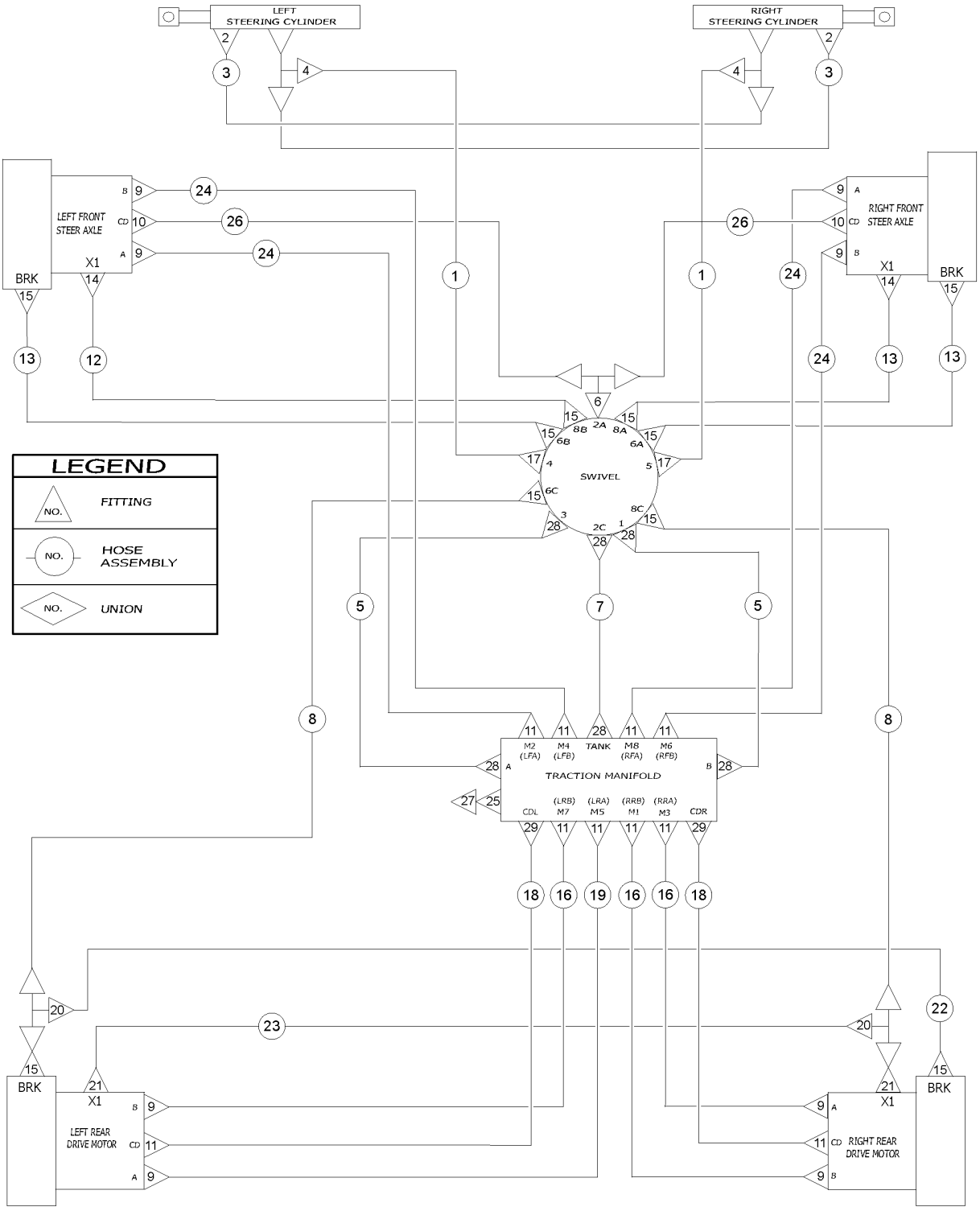
LEFT STEERING CYLINDER
RIGHT STEERING CYLINDER
LEFT FRONT STEER AXLE
RIGHT FRONT STEER AXLE
LEFT REAR DRIVE MOTOR
RIGHT REAR DRIVE MOTOR
BRK
X1
SWIVEL
TRACTION MANIFOLD
M2 (LFA)
M4 (LFB)
TANK
M8 (RFA)
M6 (RFB)
(LRB) M7
(LRA) M5
(RRB) M1
(RRA) M3
CDL
CDR
LEGEND
FITTING
HOSE ASSEMBLY
UNION

Item	Part No.	Description	Qty.
1	49130-5118GT	HOSE ASSEMBLY - 3/8" STR FEM, STR FEM	2
2	48915GT	ELBOW,90D,520220-6	2
3	49130-2482GT	ASSY, HOSE, HYD, 3/8, 3000, STR	2
4	48918GT	TEE,RUN,520428-6	2
5	94374-2430GT	HOSE ASSY,3/4,90 FEM,STR FEM	2
6	48936GT	TEE,BRANCH,520429-8	1
7	94466-2336GT	HOSE ASSY,3/4"	1
8	49119-7578GT	HOSE ASSY,1/4 STR FEM,STR FEM	2
9	48948GT	CONN,520120-8-12	8
10	48930GT	FITTING,CONN,520120-6-8***	2
11	48933GT	CONN,520120-8***	10
12	49117-10691GT	HOSE ASSY 1/4,90 FEM STR FEM	1
13	49117-10091GT	HOSE ASSY 1/4.90 FEM STR FEM	3
14	48912GT	CONN,520120-4-6***	2
15	48905GT	CONNECTOR, 520120-4	10
16	75278-5029GT	HOSE ASSY,1/2,90 FEM,STR FEM	3
17	48916GT	CONN, 520120-6	2
18	94464-4986GT	HOSE ASSY,1/2"***	2
19	75278-5129GT	HOSE ASSY,1/2,90 FEM,STR FEM**	1
20	48908GT	FITTING,TEE,RUN,SWIVEL520432-4	2
21	48911GT	ELBOW,90D,520220-4-6***	2
22	49117-6291GT	HOSE ASSY,1/4,90 FEM,STR FEM	1
23	49117-6091GT	HOSE ASSY,1/4,90 FEM,STR FEM**	1
24	81812-13292GT	HOSE ASSY,1/2"	4
25	48997GT	NIPPLE,DIAGNOSTIC,#4	1
26	49131-9603GT	HOSE ASSEMBLY 3/8"	2
27	48880GT	CAP,DIAGNOSTIC NIPPLE	1
28	48960GT	FITTING,CONN,520120-12***	6

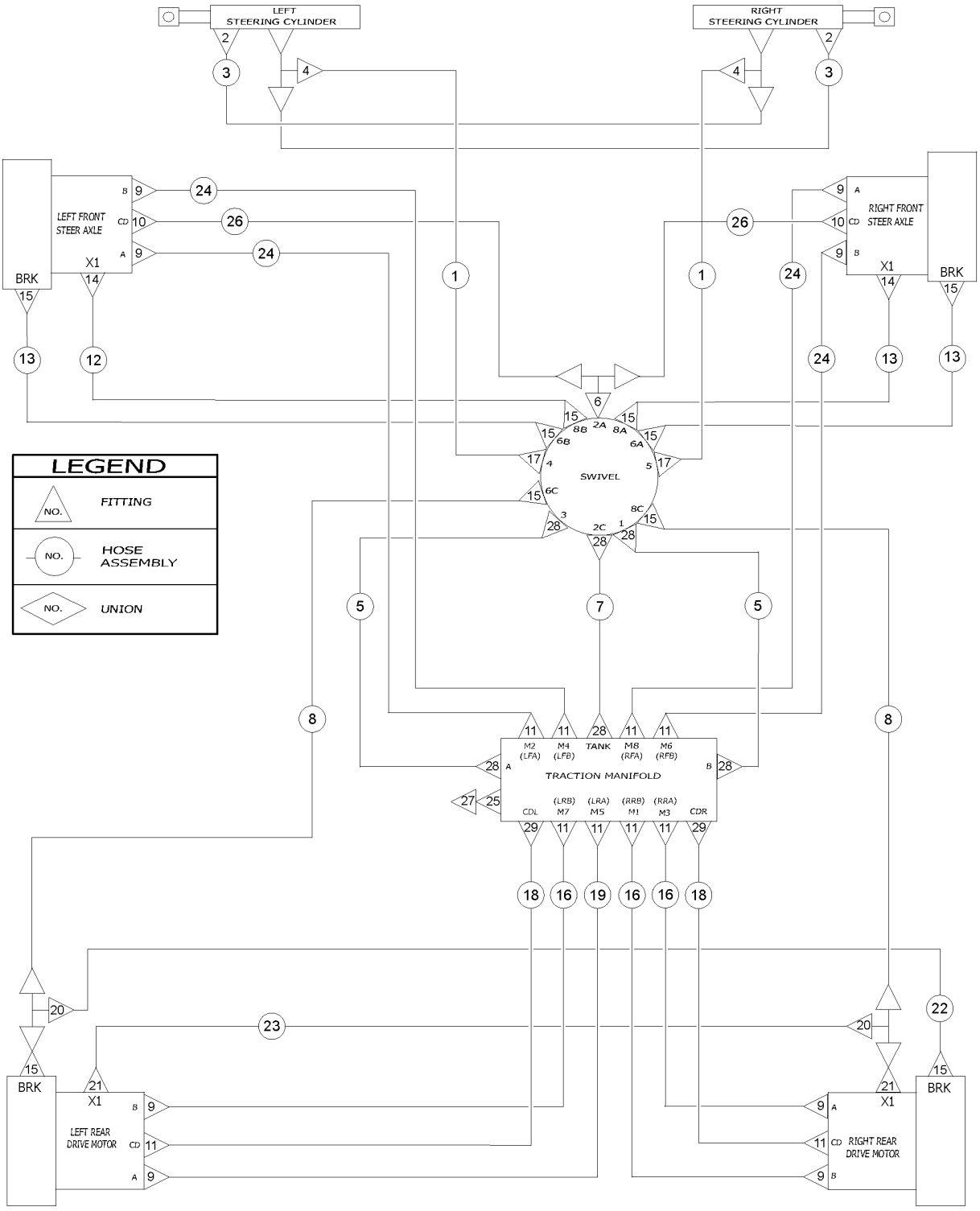
LEFT STEERING CYLINDER
RIGHT STEERING CYLINDER
LEFT FRONT STEER AXLE
RIGHT FRONT STEER AXLE
LEFT REAR DRIVE MOTOR
RIGHT REAR DRIVE MOTOR
TRACTION MANIFOLD
SWIVEL
TANK
BRK
X1
LEGEND
FITTING
HOSE ASSEMBLY
UNION

Item	*Part No.*	*Description*	*Qty.*
29	48943GT	FITTING,CONN,520120-8-6	2

805.1 Oscillate System

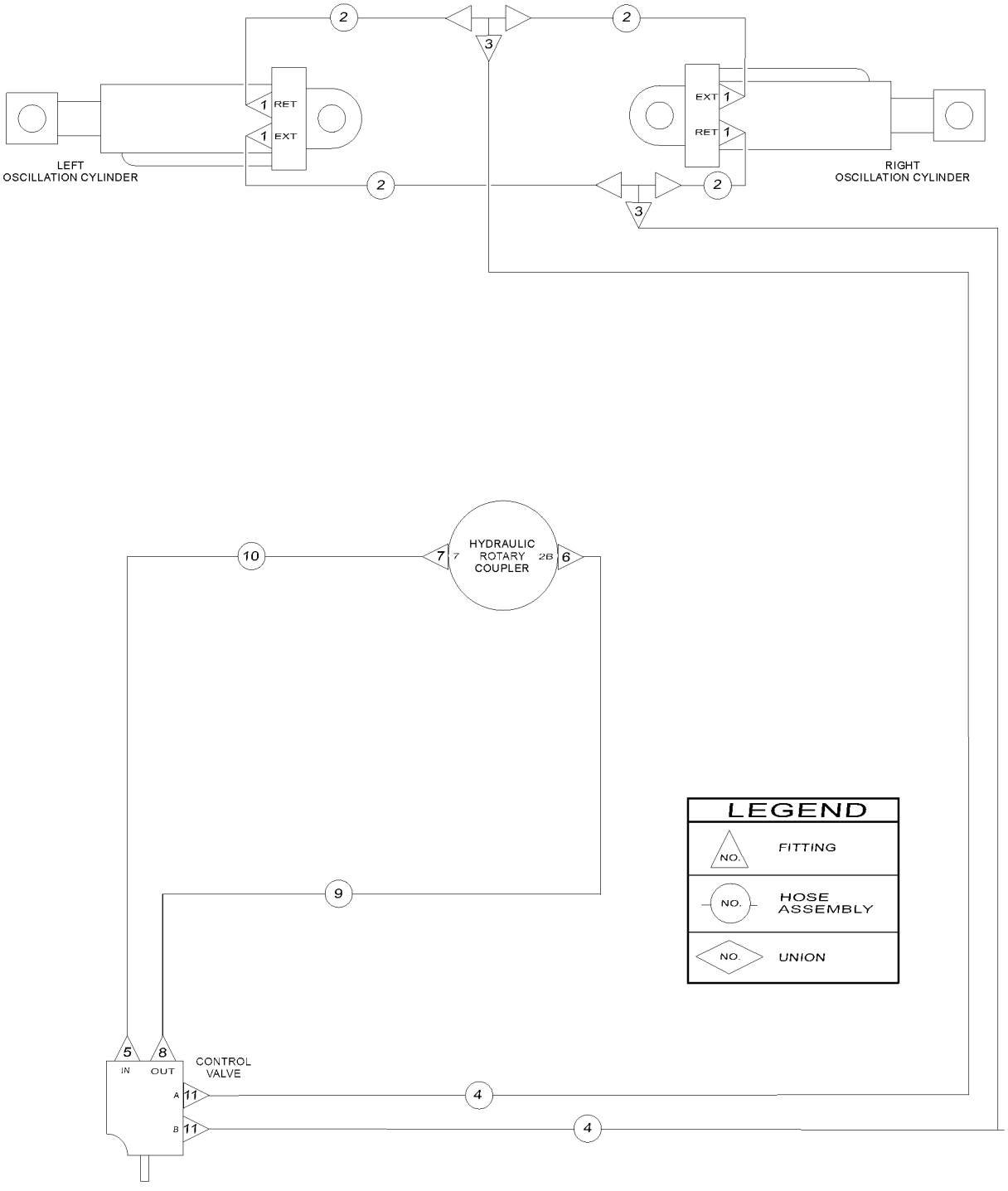

Item	Part No.	Description	Qty.
1	48912GT	CONN,520120-4-6***	4
2	49128-3291GT	HOSE ASSY,-6,STR FEM,90 FEM	4
3	53980GT	TEE,BRANCH,520433-6	2
4	1288890-9948GT	HOSE ASSY,-6,STR FEM,BULKHEAD	2
5	48929GT	FITTING,ELBOW,90D,520220-6-8	1
6	48933GT	CONN,520120-8***	1
7	48916GT	CONN, 520120-6	1
8	48932GT	FITTING,ELBOW,90D,520220-8***	1
9	94465-5566GT	HOSE ASSY,-8,STR FEM,STR FEM	1
10	49130-5591GT	HOSE ASSY,-6,STR FEM,STR FEM	1
11	1287507GT	CONN, 520120-6- 0.067	2

901.1 Drive Lights, Alarm and Beacon Packages

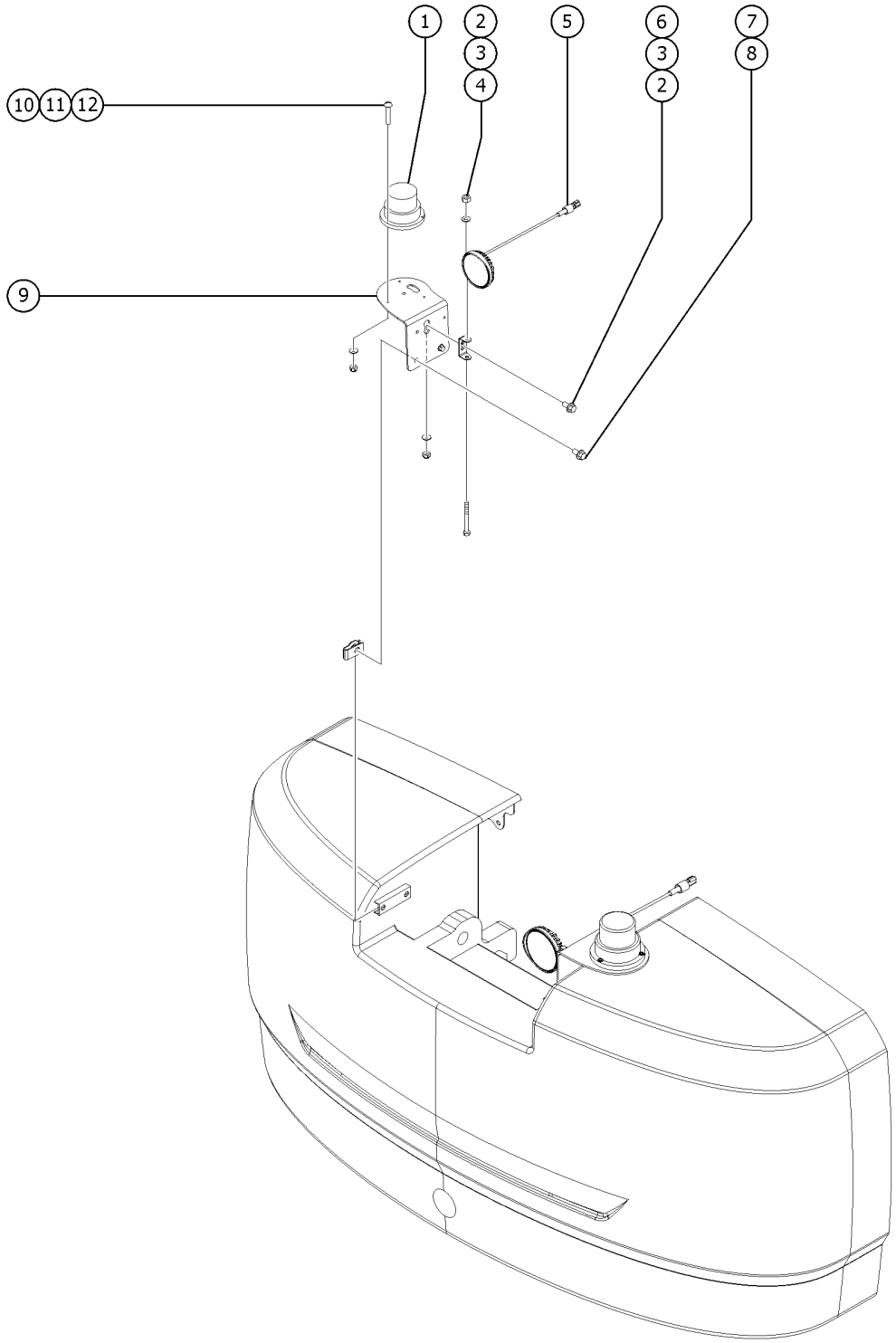

Item	Part No.	Description	Qty.
1	56704GT	STROBE,FIREBOLT,12-80VDC,AMB**	2
1-	121489GT	HARNESS,BEACON,S80/85 2008	
1-	122019GT	FLASHTUBE,U SHAPED,360DEG,BULB	
1-	226393GT	FLASHTUBE,STRAIGHT,360DEG,BULB	
1-	72282GT	LENS,AMBER,STROBE,FIREBOLT	
2	22571GT	NUT,HEX,M8 X 1.25	2
3	49408GT	WASHER, LOCK, M8	4
4	75185GT	SCREW,HHC,M8X1.25X 70MM,GR8.8	2
5	823520GT	ASSY, DRIVE LIGHT, 12V LED items 2, 3, 4 and light bracket included.	2
6	49379GT	SCREW,HHC,M8 X 1.25 X 25	
7	824089GT	SCREW, HHF, 3/8-16 X .75, 8, ZAG	4
8	29868GT	SPRING CLIP,3/8-16,.05-.20X.73,ZAG	4
9		Ref.LIGHT/BEACON BRKT (refer to 307.1)	
10	825352GT	SCREW,PHPM,10-32X1.25,ZAG	6
11	1253185GT	WASHER,FLAT,#10,USS,ZAG	6
12	1283005GT	NUT,NYLOCK FLG,10-32,A,ZAG	6

902.1 Platform Accessories

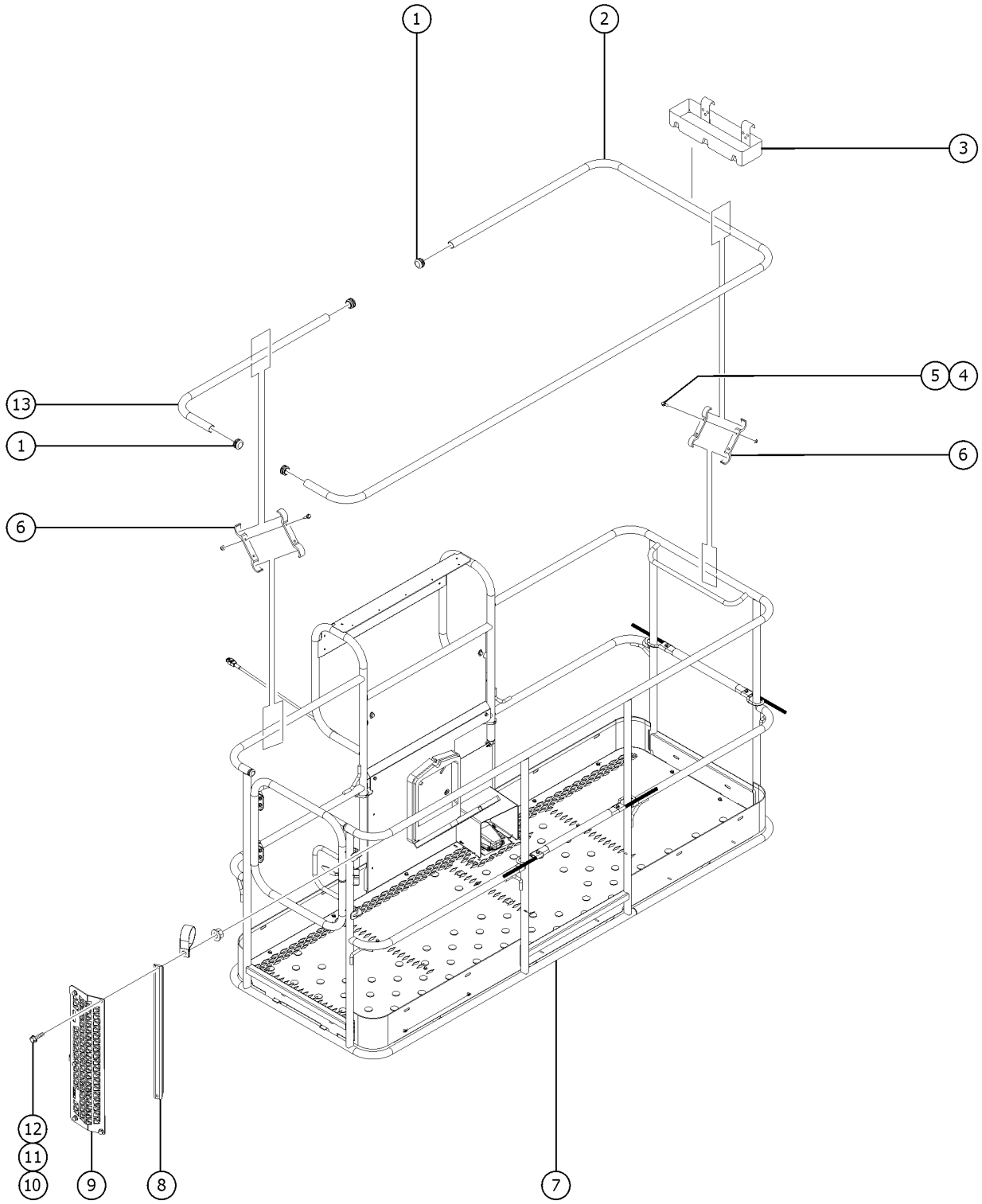

Item	Part No.	Description	Qty.
A	1291495GT	KIT, AUX RAIL, 6' PLAT, SIDE GATE (6 foot Platform)	
B	1291496GT	KIT, AUX RAIL, 8' PLAT, SIDE GATE (8 foot Platform)	
1	55753GT	BUMPER, PLASTIC, 1.25 O.D.	4
2	1271077GT	AUX RAIL, 8' PLAT, TRI-ENTRY (8 foot Platform)	1
2B	1270570GT	AUX RAIL, 6' PLAT, SIDE ENTRY (6 foot Platform)	1
3	9599-SGT	TOOL TRAY ACCESSORY***	1
4	824079GT	SCREW,HHF,1/4-20X1,8,ZAG (8 foot Platform)	26
4B	824079GT	SCREW,HHF,1/4-20X1,8,ZAG (6 foot Platform)	22
5	824027GT	NUT, TL FLG, 1/4-20, G, ZAG (8 foot Platform)	26
5B	824027GT	NUT, TL FLG, 1/4-20, G, ZAG (6 foot Platform)	22
6	122073GT	SUPPORT, RAILING (8 foot Platform)	26
6B	122073GT	SUPPORT, RAILING (6 foot Platform)	22
7		Ref. WELDMENT, PLATFORM (refer to 701.1)	1
8	1277966GT	TUBE,SQUARE, 1" X 1" X .125	1
9	1277952GT	GUARD, SWING GATE	1
10	824086GT	SCREW,HHF,5/16-18X1,8,ZAG	5
11	56424GT	CLAMP,1.25X.5 RUBBER-CUSHION	5
12	824028GT	NUT, TL FLG, 5/16-18, G, ZAG	5
13	1271078GT	AUX RAIL, 8' PLAT, TRI-ENTRY (8 foot Platform)	1
13B	1270571GT	AUX RAIL, 6' PLAT, SIDE ENTRY (6 foot Platform)	1

903.1 Half Mesh with Side Entry

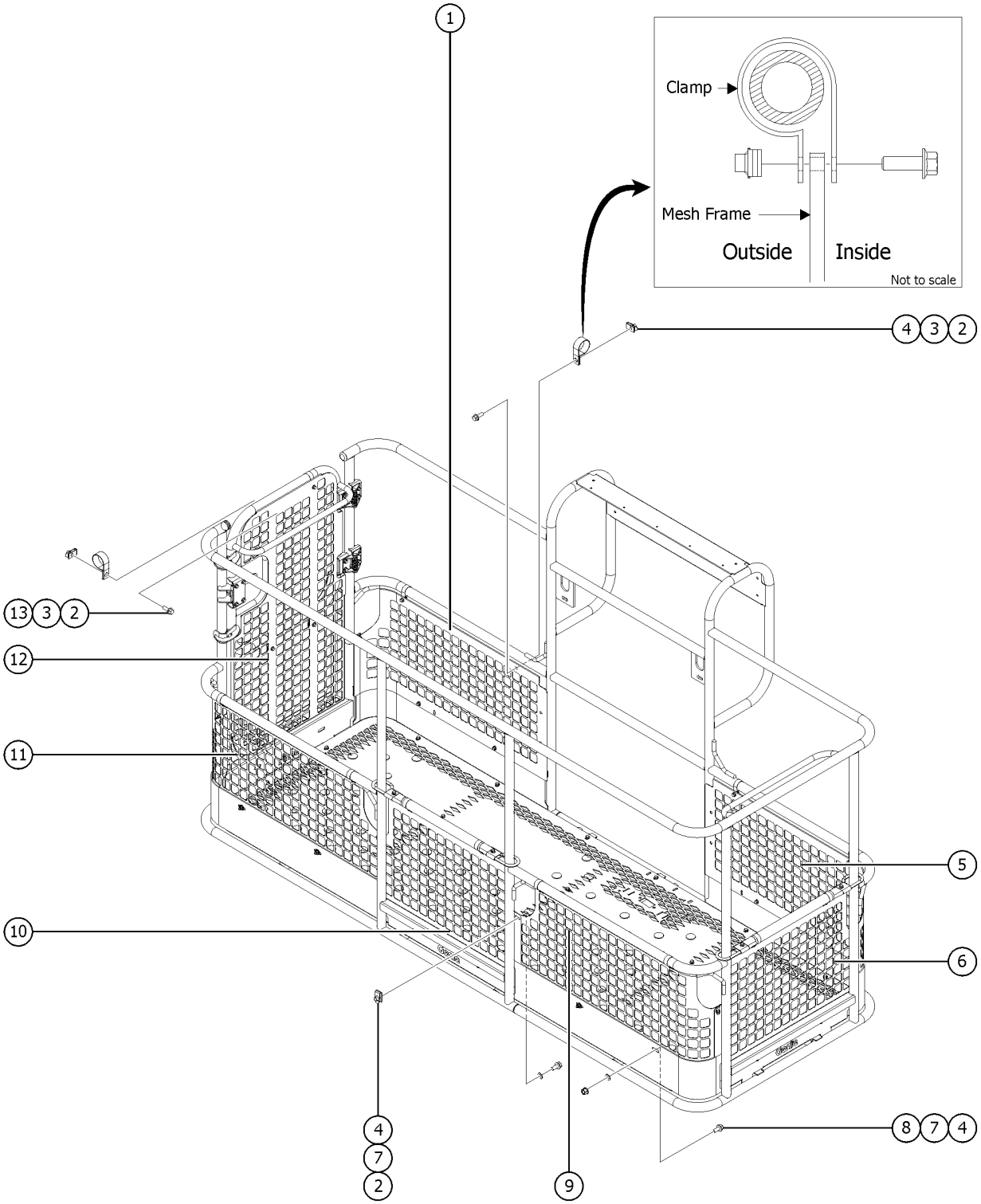

903.1 Half Mesh with Side Entry

Item	Part No.	Description	Qty.
1	1270994GT	PANEL, HALF MESH (8 foot Platform)	1
1B	1270314GT	PANEL, HALF MESH (6 foot Platform)	1
2	56912GT	SPRING CLIP,1/4-20,.025-.15X.54,ZAG	
3	56424GT	CLAMP,1.25X.5 RUBBER-CUSHION	
4	824078GT	SCREW,HHF,1/4-20X.75,8,ZAG	
5	1271019GT	PANEL, HALF MESH (8 foot Platform)	1
6	1271061GT	PANEL, HALF MESH (8 foot Platform)	1
6B	1270313GT	PANEL, HALF MESH (6 foot Platform)	1
7	824113GT	WASHER,FLAT,USS,1/4,ZAG	
8	1277924GT	NUT,NYLOCK FLG,1/4-20,F,ZAG	
9	1271018GT	PANEL, HALF MESH (8 foot Platform)	1
10	1271061GT	PANEL, HALF MESH	1
11	1271040GT	PANEL, HALF MESH (8 foot Platform)	1
11B	1270316GT	PANEL, HALF MESH (6 foot Platform)	1
12	1278793GT	WELDMENT,PLATFORM MESH GATE	1
13	824079GT	SCREW,HHF,1/4-20X1,8,ZAG	

904.1 Panel Cradle and Pipe Cradle

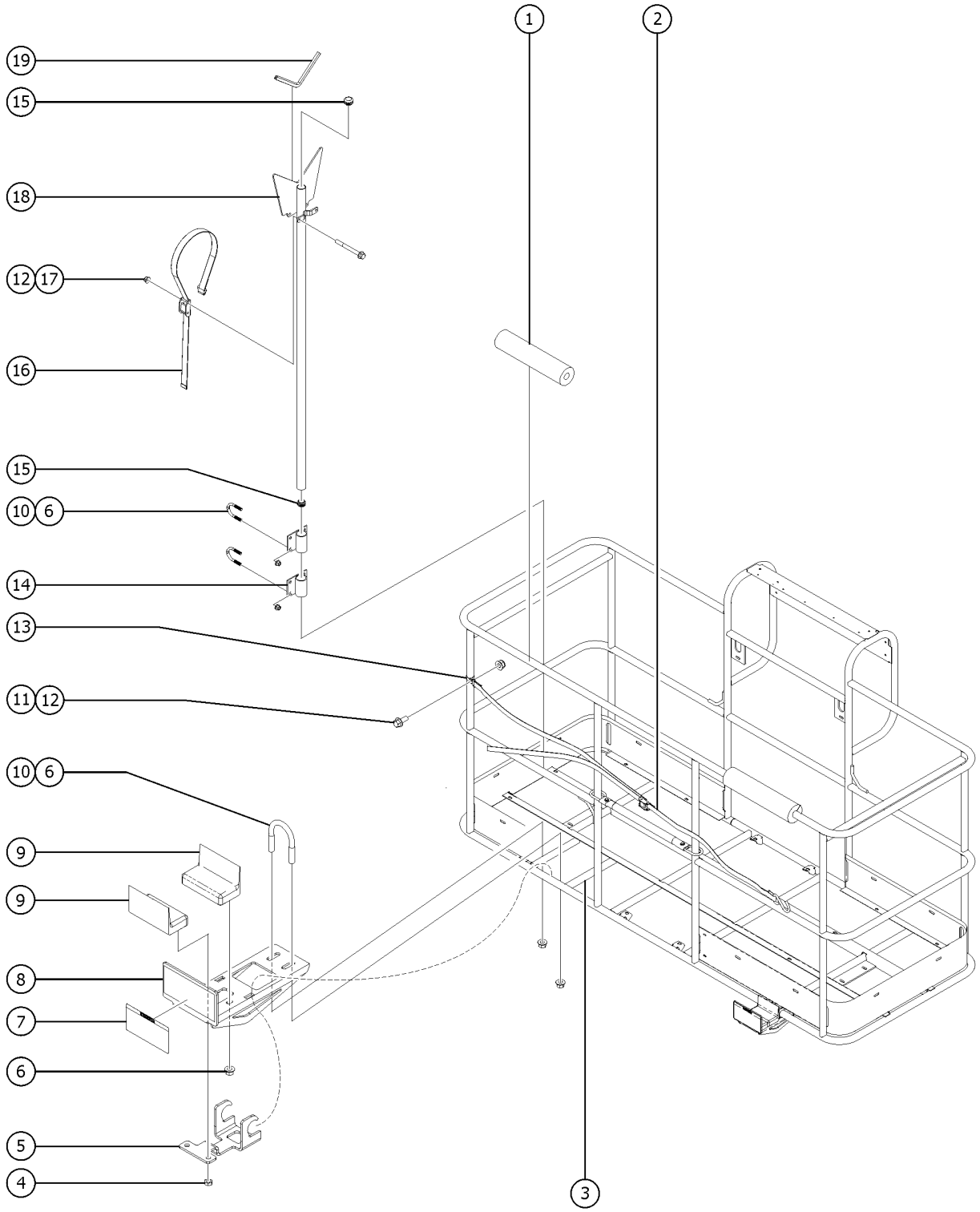

Item	Part No.	Description	Qty.
A	77683GT	ACCESSORY,PANEL CRADLE,ANSI (ANSI/CSA models)	
B	85300GT	PIPE CRADLE ASSY. SERV (ONE)** (This is a single assembly. Qty 2 of 85300GT required to complete a set)	2
B-	65630GT	INSTRUCTIONS-PIPE CRADLE,BOOMS	
C	72875GT	DECAL,WARNING,PIPE CRADLE,BOOM	2
1	88377-1400GT	FOAM PAD***	2
2	77664GT	ADJUSTABLE STRAP ASSY	1
3	73463-1175GT	TUBE, RD, ALUM, 1.25 X .083 X 11.75	2
4	824038GT	NUT, TL JAM, 3/8-16, A, ZAG	4
5	233992GT	KIT,PANEL CRADEL BRACKET,WORD (ANSI models) (includes hook, panel support bracket and installation instructions)	1
5B	228849GT	FORMING,SECONDARY SUPPORT	2
6	1274322GT	NUT,NYLOCK FLG,3/8-16,F,ZAG	
7	82410GT	DECAL,WARNING,PANEL CRADLE (order seperately)	2
8	233992GT	KIT,PANEL CRADEL BRACKET,WORD (ANSI models) (includes hook, panel support bracket and installation instructions)	1
8B	228848GT	FORMING PANEL CRADLE	2
9	56934GT	PAD,REST,1"THICK,FLANGED	4
10	1251600GT	U-BOLT, FLATTENED, 1.5DIA. X 3/8 UNC,ZAG	10
11	1256855	SCREW,HHF,1/4-20X.625,8,ZAG	1
12	1277924GT	NUT,NYLOCK FLG,1/4-20,F,ZAG	
13	56424GT	CLAMP,1.25X.5 RUBBER-CUSHION	1
14	81368GT	WELDMENT,PIPE CRADLE MOUNT	4
15	55753GT	BUMPER, PLASTIC, 1.25 O.D.	4
16	56570GT	STRAP, CONDUIT HOLDER 60"***	2
17	824083GT	SCREW,HHF,1/4-20X2.5,8,ZAG	4
18	56525GT	WELDMENT, PIPE CRADLE	2
19	19018-1100GT	TRIMLOCK,BLACK,5/32"	2

905.1 Platform Work Lights

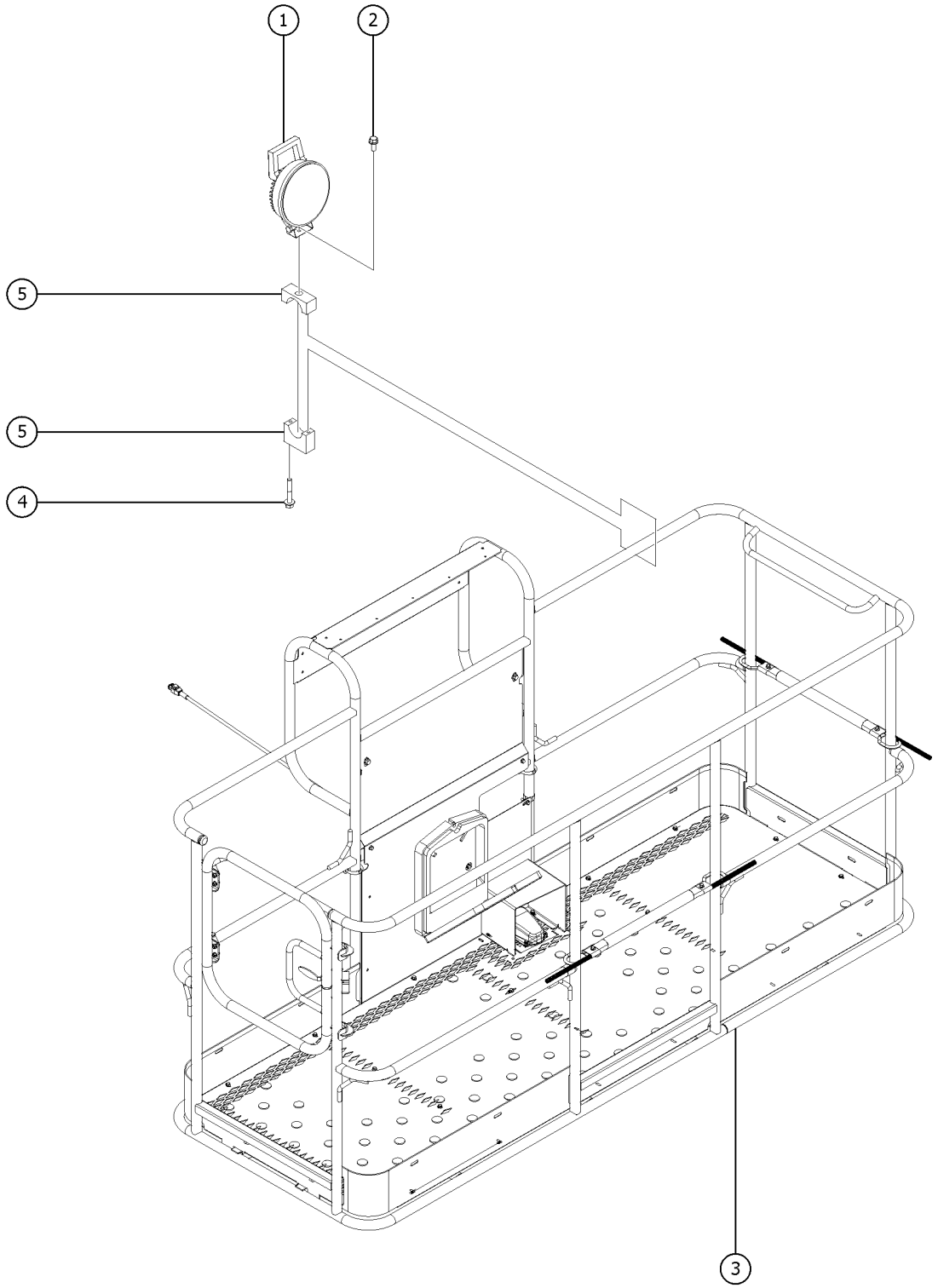

Item	*Part No.*	*Description*	*Qty.*
1	1282993GT	LIGHT, LED WHITE 12V W/SWITCH	2
1-	824149GT	NUT, M8-1.25, DIN934, 10, ZAB	
2	824085GT	SCREW, HHF, 5/16-18 X .75, 8, ZAG	2
3		Ref.WELDMENT, PLATFORM refer to 701.1	
4	824081GT	SCREW,HHF,1/4-20X1.5,8,ZAG	4
5	35956GT	WORK LIGHT MOUNTING BRACKET	2

906.1 Aircraft Protection, Standard Entry

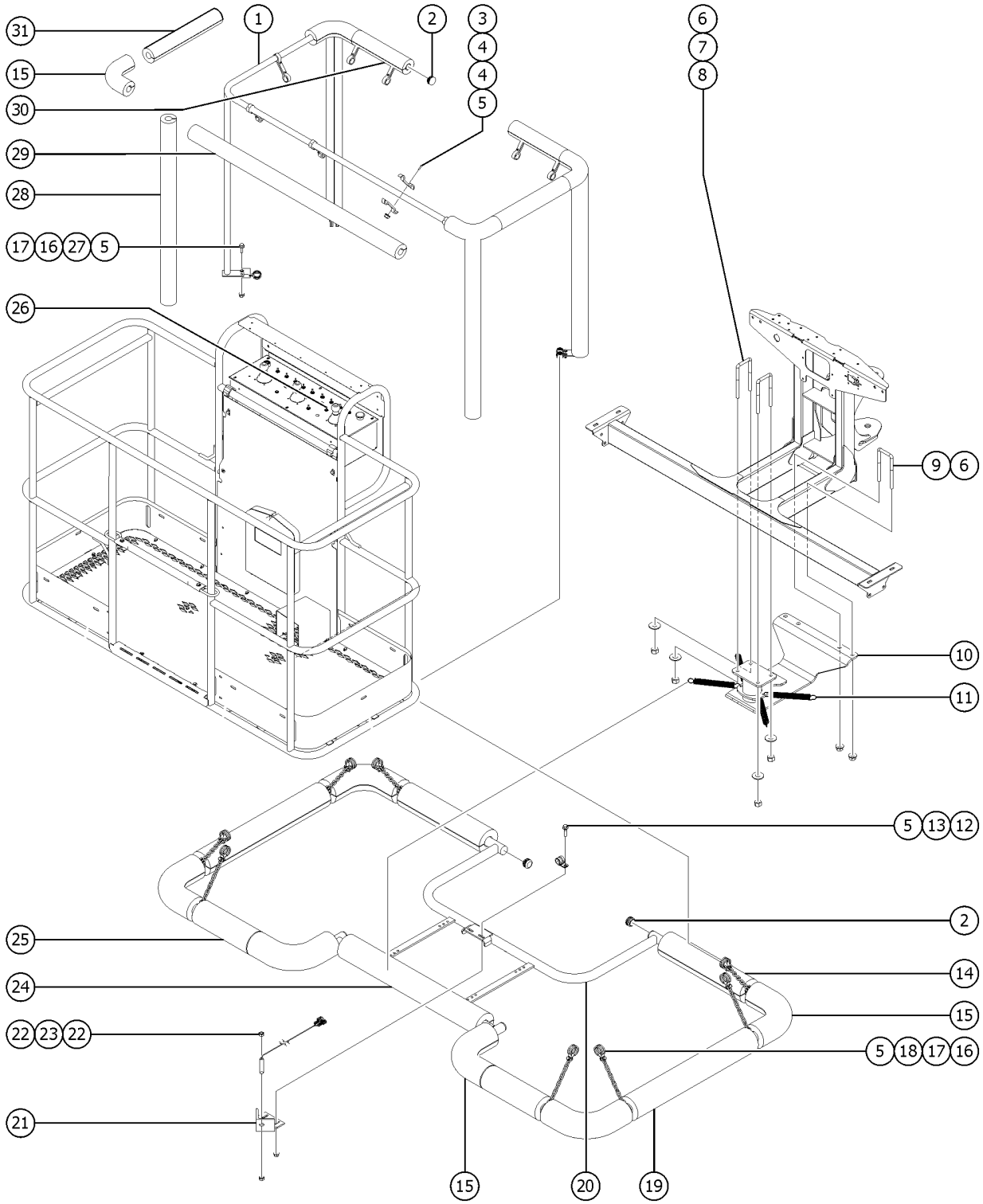

Item	Part No.	Description	Qty.
1	46188GT	WELDMENT, AIRCRAFT TOP BUMPER (Includes item 27)	1
2	55753GT	BUMPER, PLASTIC, 1.25 O.D.	6
3	824079GT	SCREW,HHF,1/4-20X1,8,ZAG	20
4	122073GT	SUPPORT, RAILING	20
5	1277924GT	NUT,NYLOCK FLG,1/4-20,F,ZAG	46
6	66472GT	U-BOLT, SQR, 3/8-16X2X5, PLTD	4
7	1255758GT	WASHER,FLAT,3/8,USS,ZAG	4
8	1283028GT	NUT,LP NYLOCK,3/8-16,2,ZAG	4
9	1274166GT	NUT,NYLOCK,3/8-16,C,ZAG	4
10	1274645GT	WELDMENT,SKID PLATE,AIRCRAFT PROT.	1
11	822769GT	SPRING,EXTENSION,1.92LB/IN	4
12	824079GT	SCREW,HHF,1/4-20X1,8,ZAG	2
13	6833GT	CLAMP,0.50,#8 X 1/4,RUB CUSH	1
14	75617-1550GT	PADDING,FOAM 3.5"OD X 1.50"ID	2
15	75636GT	PADDING,FOAM,3.0"X1.50ID 90DEG	10
16	21618GT	CLAMP,1.13,#18 X 1/4,RUB CUSH	24
17	824078GT	SCREW,HHF,1/4-20X.75,8,ZAG	24
18	56426-700GT	CHAIN,NO.2 (11 LINKS)	8
19	75617-2275GT	PADDING,FOAM 3.5"OD X 1.50"ID	2
20	822759GT	WDMT,AIRCRAFT SENSOR BUMPER	1
21	77797GT	WELDMENT, SENSOR MOUNT	1
22	88390GT	NUT,HEX,M8,PLASTIC	2
23	1269721GT	HARNESS, PROX SENSOR,ACP	1
23-	29261GT	MAGNET,NEODYMIUM,.375 X .100	
23-	27391GT	PROXIMITY SENSOR***	
24	822768GT	FOAM,AIRCRAFT PROTECTION	1
25	75617-1025GT	PADDING,FOAM 3.5"OD X 1.50"ID	2
26	128203GT	SWITCH TOGGLE ASSY SPDT 2P MOM	1

906.1 Aircraft Protection, Standard Entry

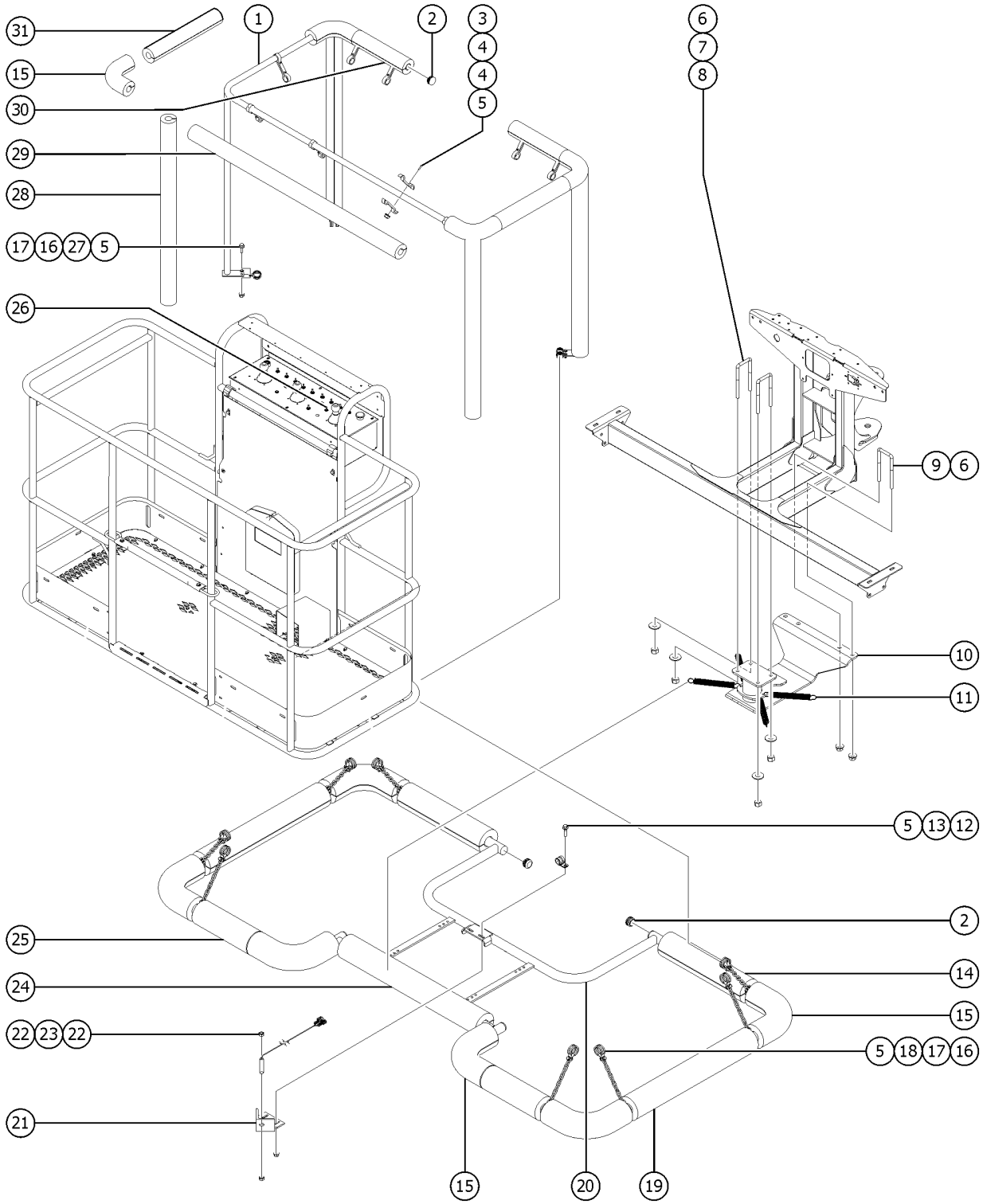

Item	*Part No.*	*Description*	*Qty.*
27	81802GT	PLATE, AIRCRAFT PROTECTION OPT	4
28	1259329GT	PADDING, FOAM, 46.5"	4
29	75617-3138GT	PADDING, FOAM 3.0" OD X 1.50" ID	2
30	1278629GT	PADDING,FOAM, 10.0"	2
31	75617-2075GT	PADDING,FOAM 3.5"OD X 1.50"ID	2

907.1 Aircraft Protection, Swing Gate

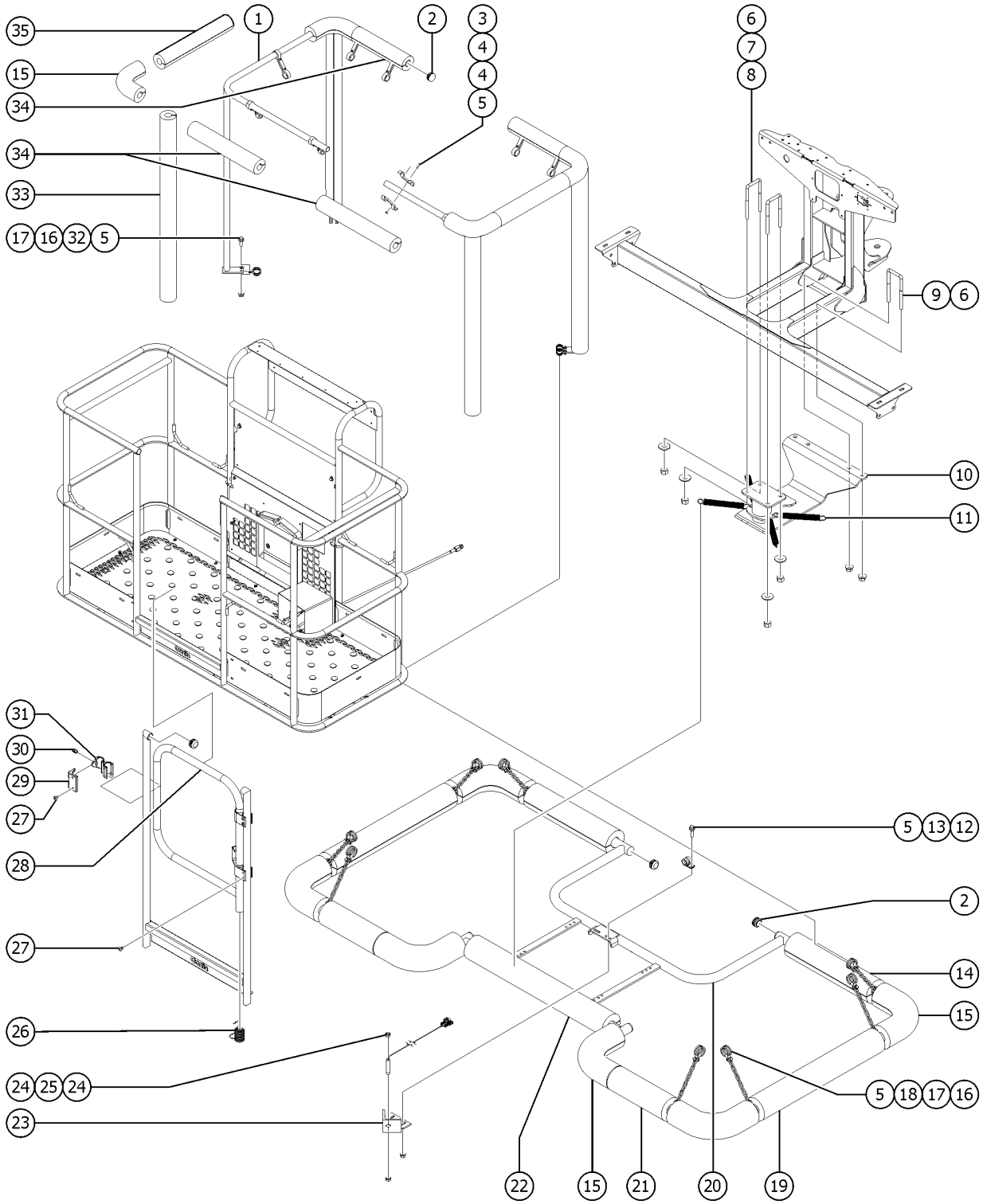

Item	Part No.	Description	Qty.
A	128203GT	SWITCH TOGGLE ASSY SPDT 2P MOM	1
1	822771GT	WDMT,FRAME,AIRCRAFT PROTECTION (Includes item 32)	2
2	55753GT	BUMPER, PLASTIC, 1.25 O.D.	11
3	824227GT	SCREW, BHC, 1/4-20 X 1, ZAG	20
4	122073GT	SUPPORT, RAILING	20
5	824027GT	NUT, TL FLG, 1/4-20, G, ZAG	46
6	66472GT	U-BOLT, SQR, 3/8-16X2X5, PLTD	4
7	1255758GT	WASHER,FLAT,3/8,USS,ZAG	4
8	1283028GT	NUT,LP NYLOCK,3/8-16,2,ZAG	4
9	1274166GT	NUT,NYLOCK,3/8-16,C,ZAG	4
10	1274645GT	WELDMENT,SKID PLATE,AIRCRAFT PROT.	1
11	822769GT	SPRING,EXTENSION,1.92LB/IN	4
12	824079GT	SCREW,HHF,1/4-20X1,8,ZAG	2
13	6833GT	CLAMP,0.50,#8 X 1/4,RUB CUSH	1
14	75617-1550GT	PADDING,FOAM 3.5"OD X 1.50"ID	2
15	75636GT	PADDING,FOAM,3.0"X1.50ID 90DEG	10
16	21618GT	CLAMP,1.13,#18 X 1/4,RUB CUSH	24
17	824078GT	SCREW,HHF,1/4-20X.75,8,ZAG	24
18	56426-700GT	CHAIN,NO.2 (11 LINKS)	8
19	75617-2275GT	PADDING,FOAM 3.5"OD X 1.50"ID	2
20	822759GT	WDMT,AIRCRAFT SENSOR BUMPER	1
21	75617-1025GT	PADDING,FOAM 3.5"OD X 1.50"ID	2
22	822768GT	FOAM,AIRCRAFT PROTECTION	1
23	77797GT	WELDMENT, SENSOR MOUNT	1
24	88390GT	NUT,HEX,M8,PLASTIC	2
25	1269721GT	HARNESS, PROX SENSOR,ACP	1
25-	27391GT	PROXIMITY SENSOR***	
25-	29261GT	MAGNET,NEODYMIUM,.375 X .100	

907.1 Aircraft Protection, Swing Gate

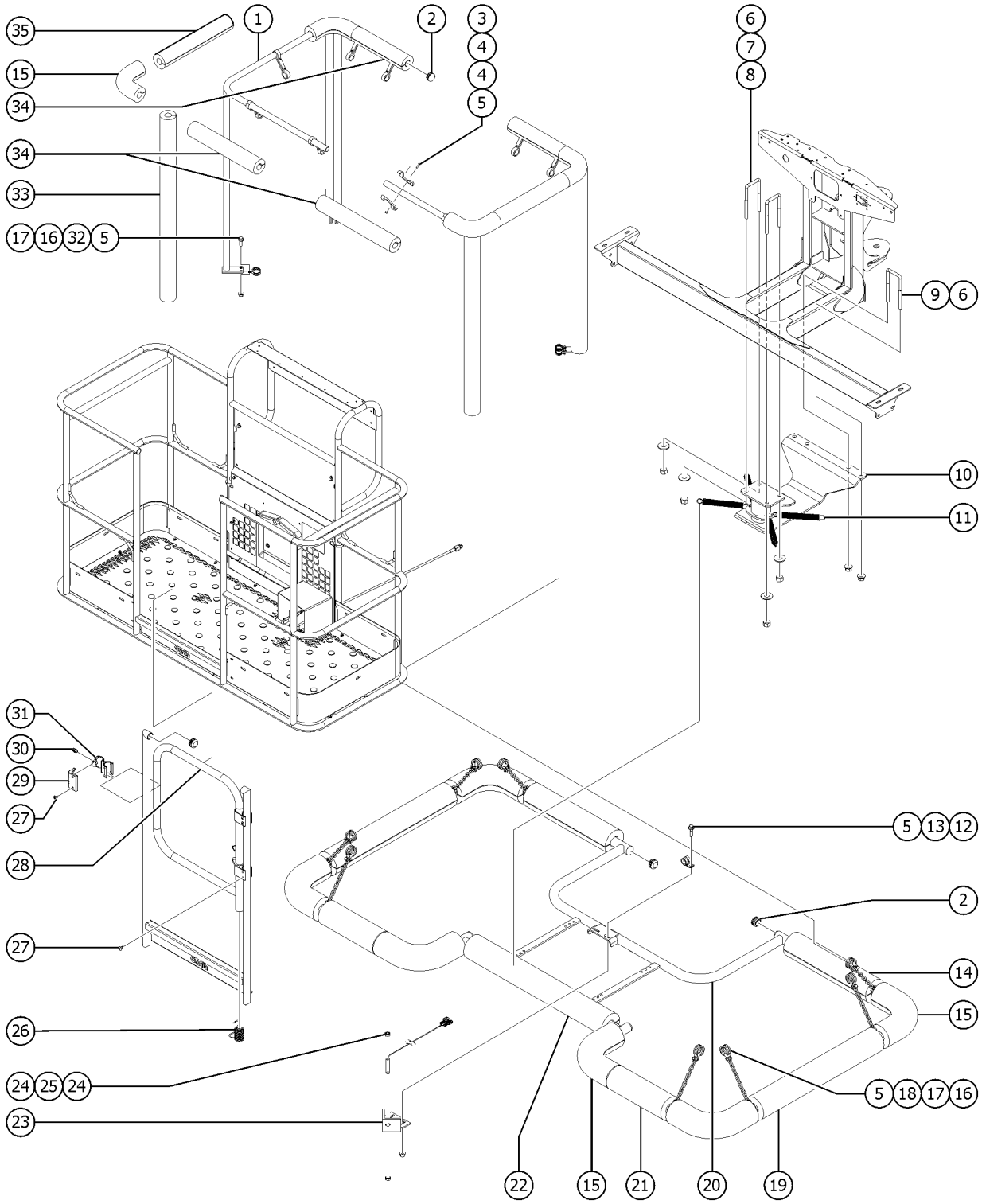

Item	Part No.	Description	Qty.
26	42104GT	SPRING,SHORT PLATFORM GATE	1
27	824207GT	RIVET, STL, STL, DOME, 1/4 X .375, ZAG	8
28	1283880GT	WELDMENT,ALUM HALF GATE	1
28-	43392GT	BUMPER,BATTERY BOX & RAILS	
29	1488GT	RAILING CATCH CASTING--DRILLED	1
30	33674GT	PIN,LOCK,SHORT***	1
31	1487GT	GATE LATCH CASTING--DRILLED	1
32	81802GT	PLATE, AIRCRAFT PROTECTION OPT	4
33	1259329GT	PADDING, FOAM, 46.5"	4
34	1278629GT	PADDING,FOAM, 10.0"	4
35	75617-2075GT	PADDING,FOAM 3.5"OD X 1.50"ID	2

908.1 Airline and Power to Platform

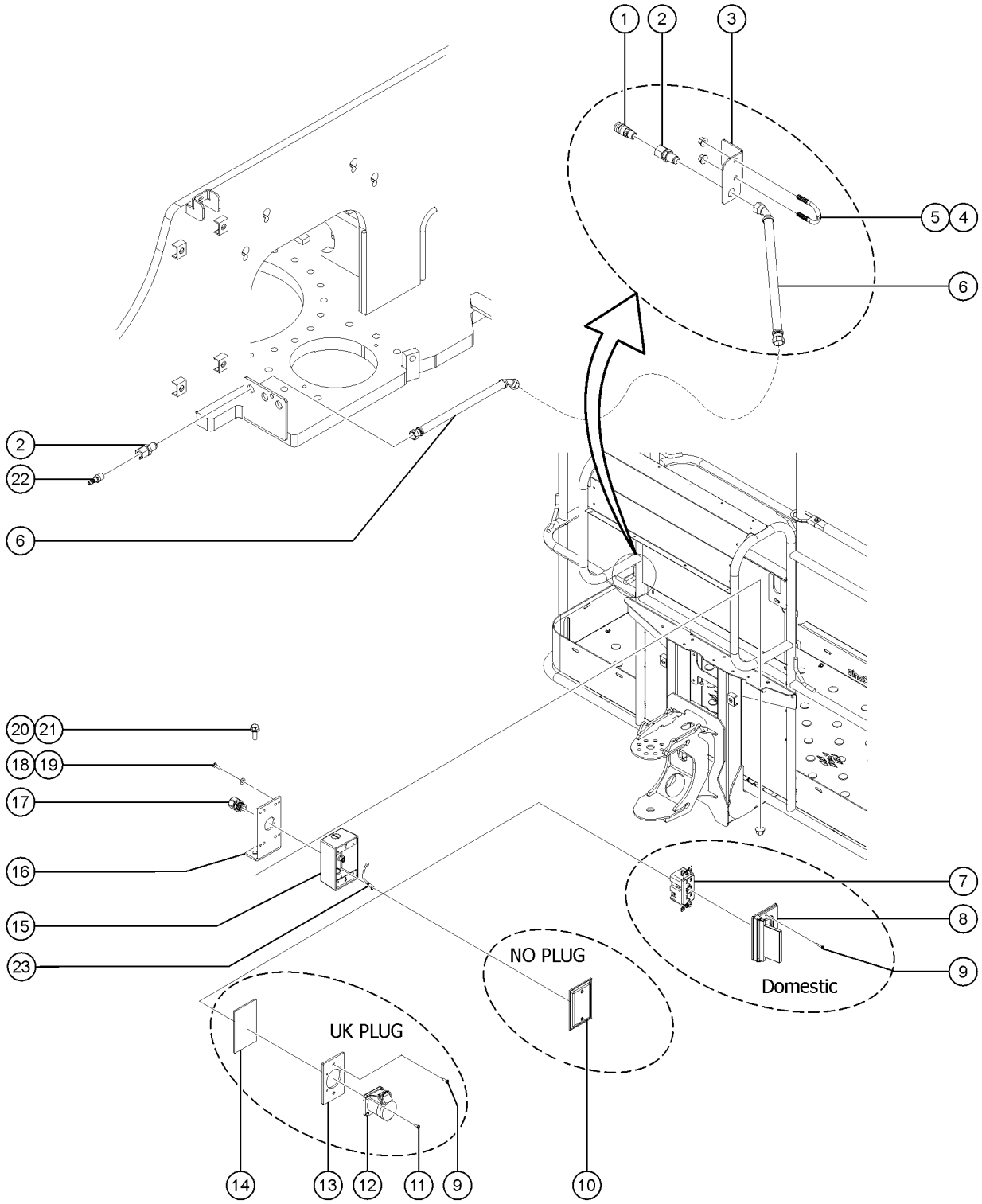

Item	Part No.	Description	Qty.
1	49215GT	MPT,CPLR,1/4"SER,3/8"X18	1
2	49212GT	FEMALE BULKHEAD CONNECTOR-8	2
3	1275087GT	FORMING, AIR TO PLAT	1
4	1251600GT	U-BOLT, FLATTENED, 1.5DIA. X 3/8 UNC,ZAG	1
5	824029GT	NUT, TL FLG, 3/8-16, G, ZAG	2
6	1283562GT	AIRLINE ASSY, S-65 XC S-65 XC, to SN S65XCH-50499	1
6B	49177-96542GT	HOSE ASSEMBLY, 1/2" AIR, BARB, STR FEM, STR FEM S-65XC, from SN S65XCH-50500	1
6C	1288367GT	AIRLINE ASSY, S-60 XC S-60 XC	1
7	13585GT	OUTLET, 110V	1
8	74006GT	COVER,GFCI,HORIZONTAL,WEATHER	1
9	1253489GT	SCREW,FHPM,6-32 X .75,ZAG	2
10	10777GT	COVER, BLANK	1
11	1255788GT	SCREW,FHPM,8-32X.375,ZAG	4
12	T112560GT	RECEPTACLE,UK,110V	1
13	T112561GT	PLATE,UK,POWER TO PLAT	1
14	74052GT	GASKET,COVER,GFCI,WEATHERPROOF	1
15	1310379GT	T-BOX 2.75 X 4.5 X 2.5	1
16	1311043GT	BRACKET,POWER TO PLAT, DOM	1
17	7057GT	CONN. SQZ,1/2NPT .39-.56 MED.	1
18	1257296GT	SCREW,PHPM-ST,8-32X.50,TYPE F,ZAG	4
19	1257390GT	WASHER,FLAT,#8,SAE,ZAG	4
20	824090GT	SCREW,HHF,3/8-16X1,8,ZAG	2
21	1274322GT	NUT,NYLOCK FLG,3/8-16,F,ZAG	2
22	49214GT	MALE PIPE THD,1/4" SER,3/8"X18	1
23	1320570GT	HARNESS, GND JUMPER, NO PLUG from SN S65XCH-50050	1

909.1 Hostile Environment, Boom Wipers

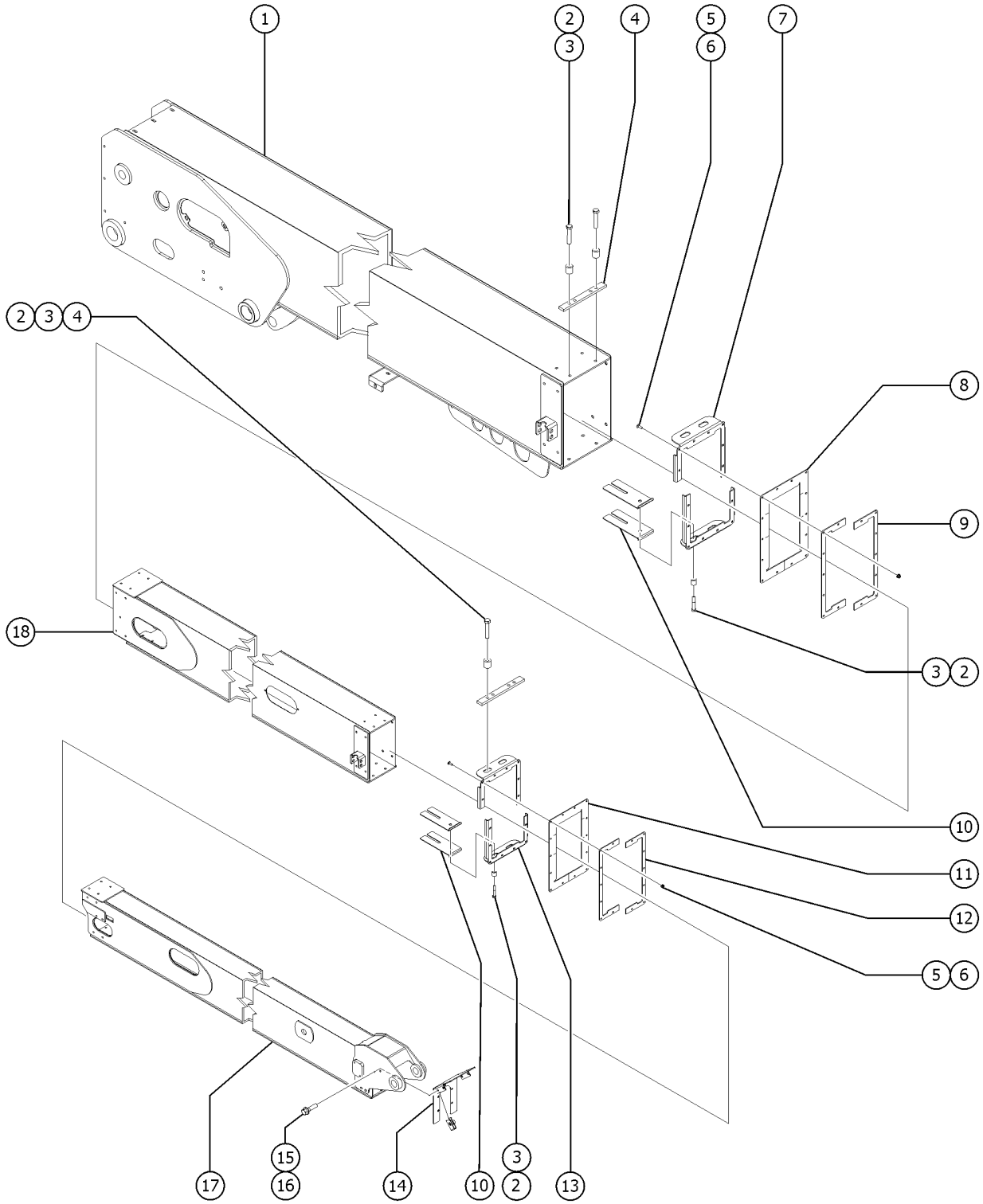

Item	Part No.	Description	Qty.
1		Ref. BOOM TUBE 1 (Refer to 603.1)	
2	1253478GT	SCREW,HHF,3/8-16X2,8,ZAG	8
3	101932GT	TUBE, RD., STL., DOM .75 X .437 X .78	8
4	1287510GT	SPACER, BOOM WIPER TOP	2
5	824124GT	BOLT, CARRIAGE, 1/4-20 X .75, 5, ZAG	28
6	1277924GT	NUT,NYLOCK FLG,1/4-20,F,ZAG	28
7	1287509GT	FORMING, BRKT, WIPER 1 TO 2	2
8	119086GT	WIPER RUBBER, 1 TO 2	1
9	119085GT	PLATE BACKING, WIPER 1 TO 2	2
10	1287511GT	SHIM,WEAR PAD,7X3,12GA	8
11	119089GT	WIPER RUBBER, 2 TO 3	1
12	119088GT	PLATE BACKING, WIPER 2 TO 3	2
13	1287508GT	FORMING, BRKT, WIPER 2 TO 3	2
14	1276396GT	COVER.DEBRIS #3 BOOM from SN S65XCH-49352	1
15	56912GT	SPRING CLIP,1/4-20,.025-.15X.54,ZAG from SN S65XCH-49352	2
16	824079GT	SCREW,HHF,1/4-20X1,8,ZAG from SN S65XCH-49352	2
17		Ref. BOOM TUBE 3 (Refer to 603.1)	
18		Ref. BOOM TUBE 2 (Refer to 603.1)	

910.1 Hostile Environment, Turntable Components

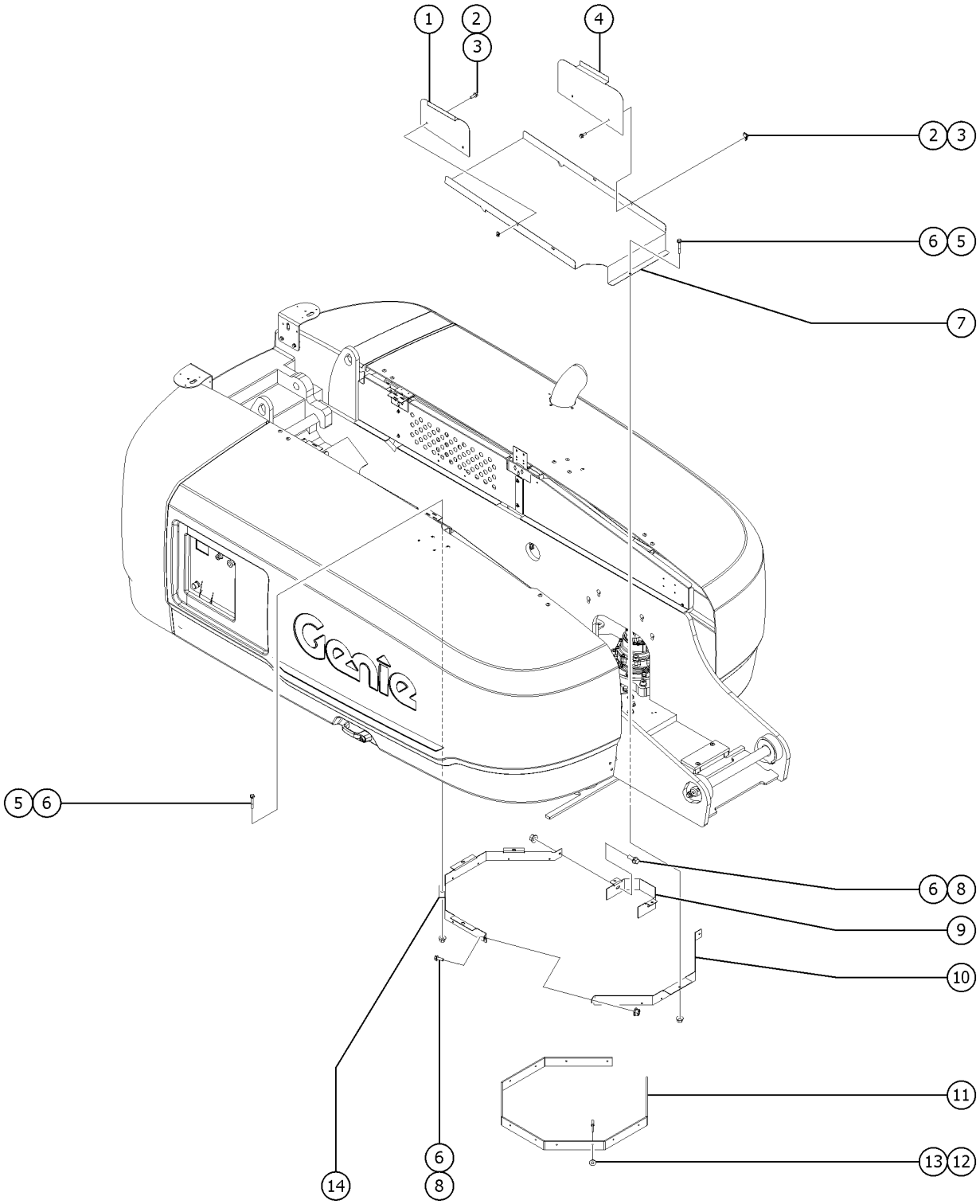

Item	Part No.	Description	Qty.
1	77997GT	FORMING,TT LH SIDE COVER	1
1-	1296971GT	FORMING, TT LH SIDE COVER	
2	824078GT	SCREW,HHF,1/4-20X.75,8,ZAG	4
3	56912GT	SPRING CLIP,1/4-20,.025-.15X.54,ZAG	4
4	77998GT	FORMING,TT RH SIDE COVER	1
5	1256856GT	SCREW,HHF,3/8-16X2.5,8,ZAG	4
6	824029GT	NUT, TL FLG, 3/8-16, G, ZAG	7
7	77996GT	FORMING,TURNTABLE CENTER COVER	1
8	824090GT	SCREW,HHF,3/8-16X1,8,ZAG	3
9		REF. FORMING,PINION GUARD (refer to 307.1)	1
10	70318GT	FORMING, SLEW RING COVER	1
11	70319GT	WIPER,RING GEAR GUARD	1
12	824113GT	WASHER,FLAT,USS,1/4,ZAG	14
13	81167GT	RIVET,ALUM,P,.25X.625	14
14	70317GT	FORMING, WIPER GUARD LT	1

911.1 Hostile Environment, Cylinder Bellows and Cable Track

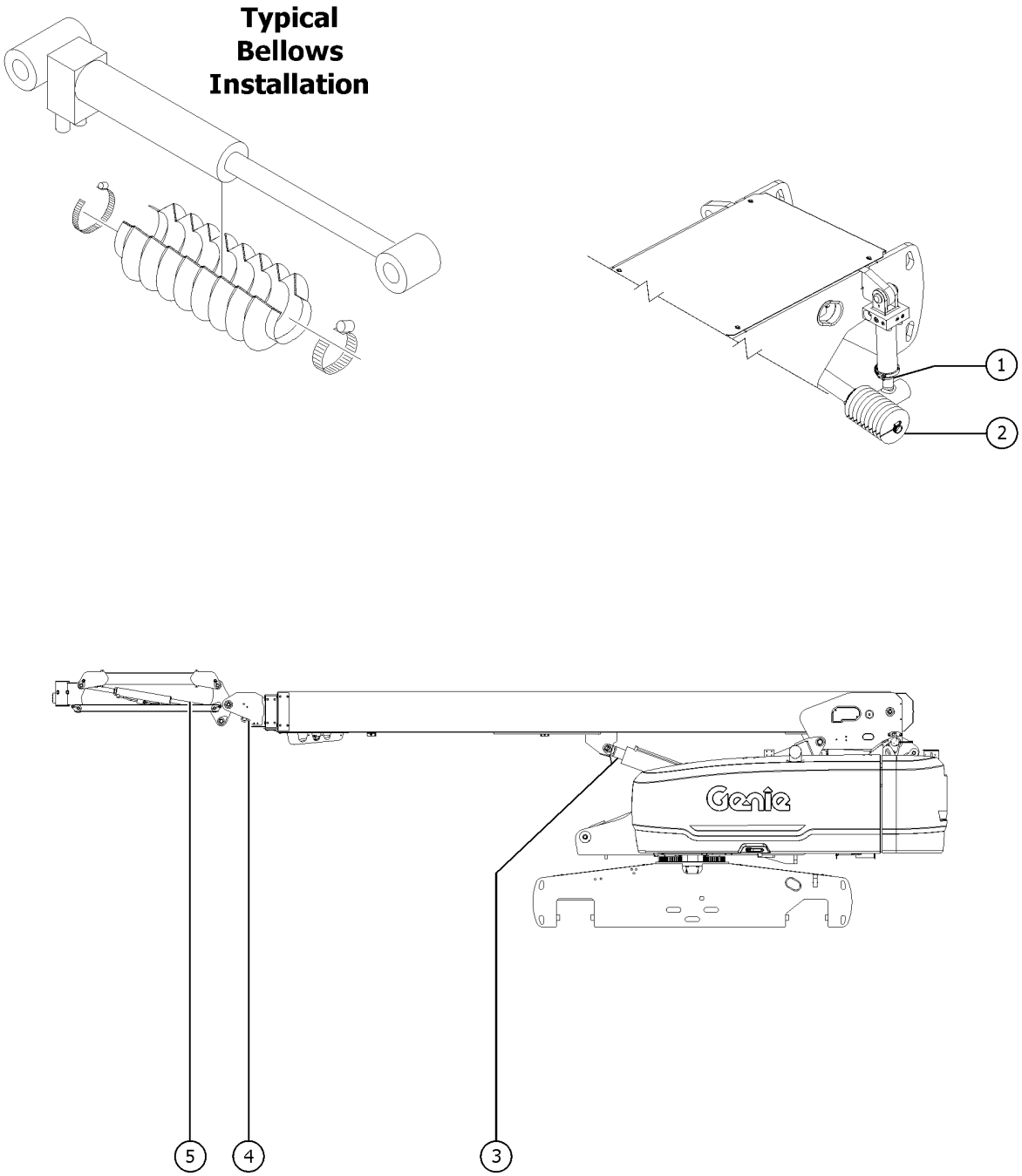

Item	*Part No.*	*Description*	*Qty.*
A	106099GT	COVER,CABLE TRACK	1
1	63727GT	COVER, PROTECTIVE, OSCILLATE	2
1-	22672GT	CLAMP,HOSE,1.75	
1-	34955GT	CLAMP, HOSE, 5.00	
2	34922GT	COVER,PROTECTIVE,STEERING	2
2-	22672GT	CLAMP,HOSE,1.75	
2-	34955GT	CLAMP, HOSE, 5.00	
3	1287490GT	BELLOWS, CYLINDER LIFT	1
3-	1288402GT	CLAMP, HOSE, 8,00"	
3-	34955GT	CLAMP, HOSE, 5.00	
4	1291159GT	BELLOWS, PLATFORM LEVEL CYLINDER	
4-	30971GT	CLAMP,HOSE,3.00"	
4-	1280080GT	PLATE, BACKING BELLOWS, S-80/85 XC	
4-	1251757GT	SCREW,PHPM,10-32X.50,ZAG	
4-	1256312GT	WASHER,LOCK,#10,ZAG	
4-	23405GT	NUTSERT,10-32 STEEL CAD PLTD	
5	1279801GT	BELLOWS, JIB CYLINDER	1
5-	35434GT	CLAMP,HOSE,2.00***	
5-	34955GT	CLAMP, HOSE, 5.00	

912.1 Hostile Environment, Ground and Platform Box Covers

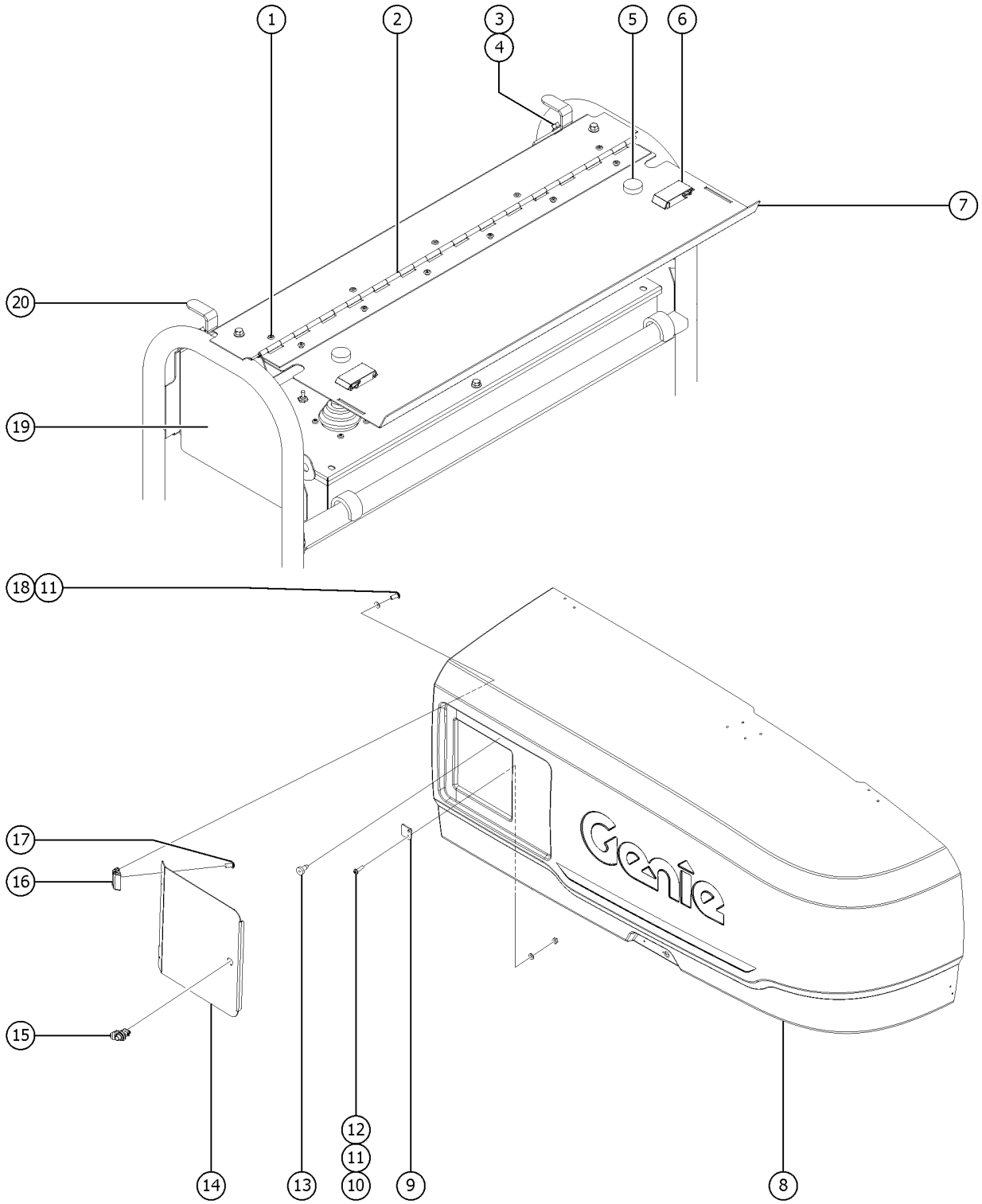

Item	Part No.	Description	Qty.
1	54486GT	RIVET,ALUM,ALUM,3/16BUTTONHEAD	11
2	111526GT	HINGE,PLAT CONTROL BOX COVER	1
3	824078GT	SCREW,HHF,1/4-20X.75,8,ZAG	8
4	1277924GT	NUT,NYLOCK FLG,1/4-20,F,ZAG	8
5	43392GT	BUMPER,BATTERY BOX & RAILS	2
6	30468GT	LATCH,SLIDE, FLUSH MOUNT STYLE	2
7	102785GT	CONTROL BOX COVER,LID	1
8		REF. COVER, TANK-SIDE, S60/65XC refer to 308.1	
9	1261001GT	STRIKER, LATCH	1
10	824215GT	SCREW, PHPM, 10-32 X .75, ZAG	2
11	1253185GT	WASHER,FLAT,#10,USS,ZAG	6
12	1256804GT	NUT,10-32,ZAG	2
13	34619GT	BUMPER,RUBBER***	2
14	1284272GT	FORMING,CONTROL BOX COVER,ALC600	1
15	1259583GT	LATCH, PUSH BUTTON	1
16	1259584GT	HINGE, CONSTANT TORQUE	2
17	825349GT	SCREW,PHPM,10-32X.38,ZAG	4
18	1257227GT	SCREW,PHPM,10-32X.625,ZAG	4
19	88607GT	COVER,CONTROL BOX LEFT SIDE***	1
19B	88606GT	COVER,CONTROL BOX RIGHT SIDE**	1
20	102786PGT	FORMING,LATCH,CTRL BOX LID PTD	2

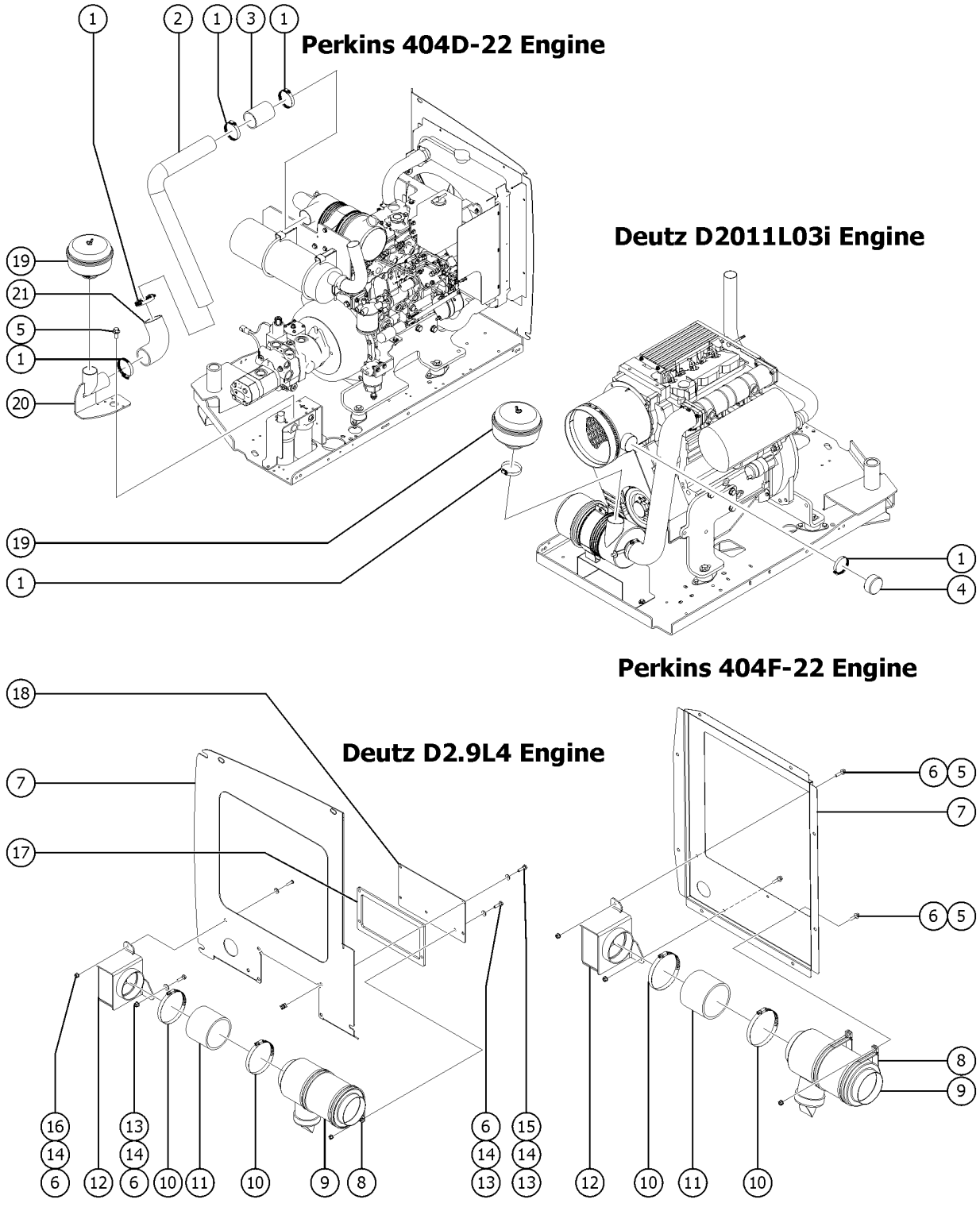
Perkins 404D-22 Engine
Deutz D2011L03i Engine
Perkins 404F-22 Engine
Deutz D2.9L4 Engine

Item	Part No.	Description	Qty.
1	45435GT	CLAMP,HOSE,2.50"***	
2	77891GT	TUBE,AIR INTAKE	1
3	34162-0400GT	HOSE,AIR INTAKE 2.5" I.D.	1
4	70529GT	CAP,PLASTIC,2.5 ID	1
5	824079GT	SCREW,HHF,1/4-20X1,8,ZAG	4
6	824027GT	NUT, TL FLG, 1/4-20, G, ZAG	4
7		Ref: Shroud refer to section 500	
8	101639GT	CLAMP,5.38,#86 X 3/8,RUB CUSH	2
9	88493GT	PRECLEANER,AIR INTAKE	1
10	34955GT	CLAMP, HOSE, 5.00	2
11	822871GT	HOSE,STRAIGHT,4" ID X 3.6" LG	1
12	822817GT	WELDMENT,PRECLEANER BOX	1
13	824060GT	SCREW, HHC, 1/4-20 X 1, 8, ZAG	7
14	824113GT	WASHER,FLAT,USS,1/4,ZAG	8
15	56912GT	SPRING CLIP,1/4-20,.025-.15X.54,ZAG	4
16	824227GT	SCREW, BHC, 1/4-20 X 1, ZAG	1
17	1262846GT	SPACER, PRE-CLEANER, TD2.9	1
18	1266159GT	PLATE, PRE-CLEANER, TD2.9	1
19	34959GT	PRECLEANER,AIR INTAKE***	1
20	1262359GT	WELDMENT, PRE-CLEANER, BRACKET	1
21	34164GT	ELBOW,90 DEGR,RUBBER,2.5"I.D.*	1

914.1 Welder Option, Chassis Components

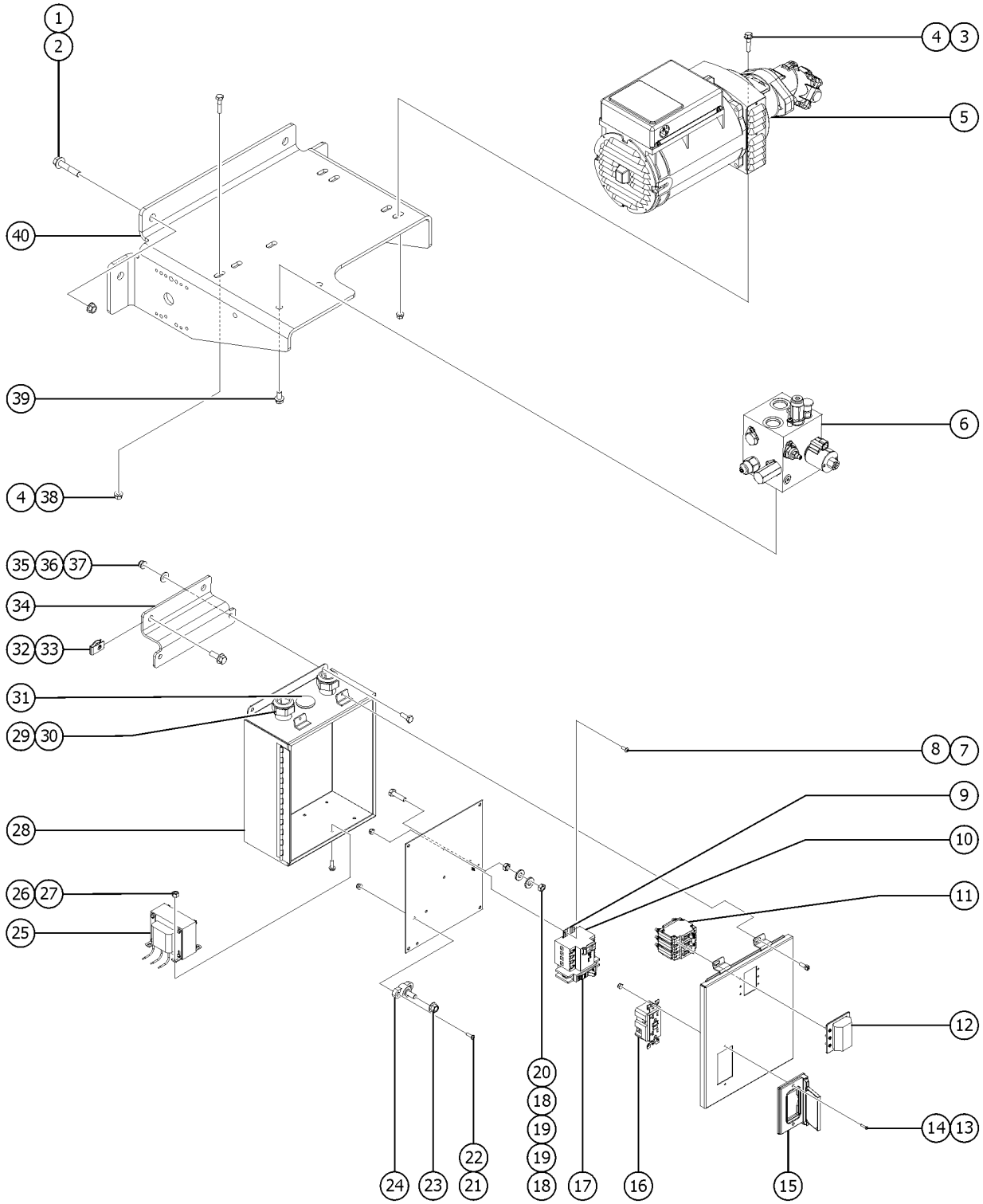

Item	Part No.	Description	Qty.
1	1258670GT	BOLT,CARRIAGE,1/2-13X2.5,5,ZAG	4
2	1274172GT	NUT,NYLOCK FLG,1/2-13,G,ZAG	4
3	824087GT	SCREW, HHF, 5/16-18 X 1.25, 8, ZAG	2
4	1274167GT	NUT,NYLOCK FLG,5/16-18,F,ZAG	3
5	1281786GT	GENERATOR, HYD, 13KW 60HZ, 240V 3PH use until exhausted, replaced by 1285508	1
5-	1285150GT	COVER, ACCESS, GEN COUPLING for 1281786	
5-	1285151GT	COUPLING, GEN DRIVE, MOTOR SIDE for 1281786	
5-	1285152GT	COUPLING, GEN DRIVE, GEN SIDE for 1281786	
5-	1285153GT	COUPLING, INSERT, GEN DRIVE for 1281786	
5B	1285508GT	GENERATOR, HYD, 13KW 60HZ, 240V 3PH	1
6		REF. MANIFOLD, HYD, LIFT POWER, WELDER GENERATOR refer to 405.1	1
7	54365GT	SCREW,PHIL,PHM,10-32 X .5,SSTL	2
8	6178GT	NUT, NYLOCK, 10-32	3
9	825737GT	DIN RAIL,4.60"	1
10	824617GT	CIRCUIT BREAKER,GFCI,3PH,63A,30mA TRIP	1
11	1276986GT	CIRCUIT BREAKER,MAGTRIP,3PH,40A	1
12	1276672GT	BOOT, ENVIRO, 3PH CIRCUIT BREAKER	1
13	63375GT	SCREW, FHM, 6-32 X .75	2
14	12344GT	NUT,NYLOCK,6-32	2
15	74006GT	COVER,GFCI,HORIZONTAL,WEATHER	1
16	80543GT	RECEPTACLE, 120VAC, 20A, GFCI	1
17	106073GT	CIRCUIT BREAKER,20A,SINGLE PH	1
18	6037GT	NUT,HEX,5/16-18,GR5	2
19	5397GT	WASHER, FLAT, USS, 5/16-18	2
20	13000GT	SCREW,HHC,5/16-18 X 1.25	1
21	1257227GT	SCREW,PHPM,10-32X.625,ZAG	2
22	1283005GT	NUT,NYLOCK FLG,10-32,A,ZAG	2
23	1274322GT	NUT,NYLOCK FLG,3/8-16,F,ZAG	1

914.1 Welder Option, Chassis Components

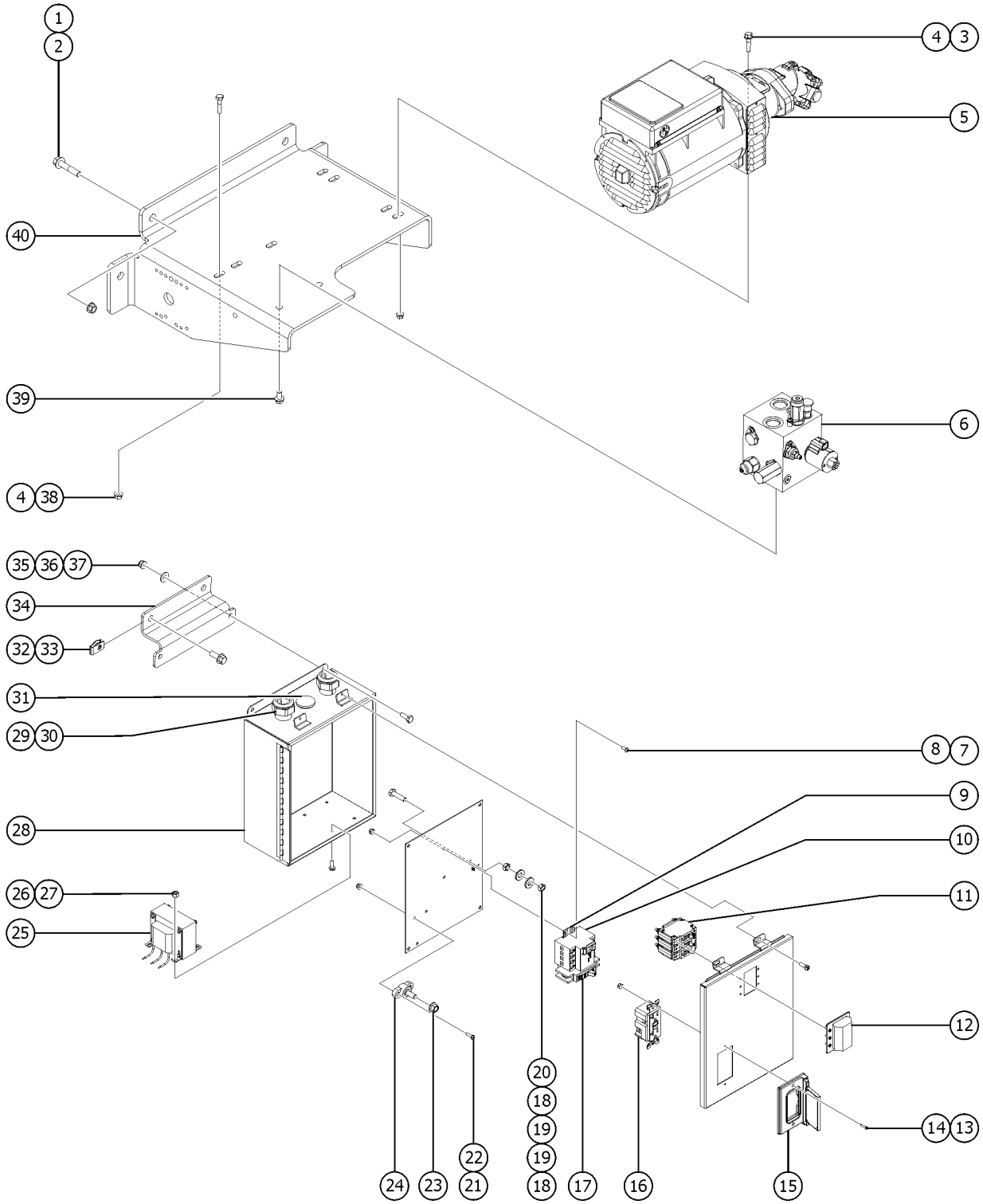

Item	Part No.	Description	Qty.
24	94982GT	STANDOFF, 3/8" BLACK	1
25	1282963GT	TRANSFORMER, 139 TO 120 VOLT	1
26	1274170GT	NUT, NYLOCK, 10-24, A, ZAG	4
27	1270665GT	SCREW,HHF,10-24X.625,5,ZAG	4
28	1283843GT	ENCLOSURE, JBOX, 12X10	1
28B	1296591GT	KIT, BRACKET AND SCREW for 1283483	
29	20776GT	CABLE SQUEEZE CONN.	2
29-	106104GT	O-RING,SEAL RING,1" NPT	
30	18665GT	LOCKNUT,ELECTRIC,1" NPT	2
31	106495GT	PLUG,1/2" HUBBLE	1
32	29868GT	SPRING CLIP,3/8-16,.05-.20X.73,ZAG	4
33	824090GT	SCREW,HHF,3/8-16X1,8,ZAG	4
34	1283548GT	FORMING, MOUNT, JBOX, S65XC	2
35	1277924GT	NUT,NYLOCK FLG,1/4-20,F,ZAG	4
36	824113GT	WASHER,FLAT,USS,1/4,ZAG	4
37	824059GT	SCREW, HHC, 1/4-20 X .75, 8, ZAG	4
38	824066GT	SCREW,HHC,5/16-18X1.375,8,ZAG	1
39	824089GT	SCREW, HHF, 3/8-16 X .75, 8, ZAG	2
40	1283513GT	BRACKET, GENERATOR 13 kW	1

915.1 Welder Option, Platform Components

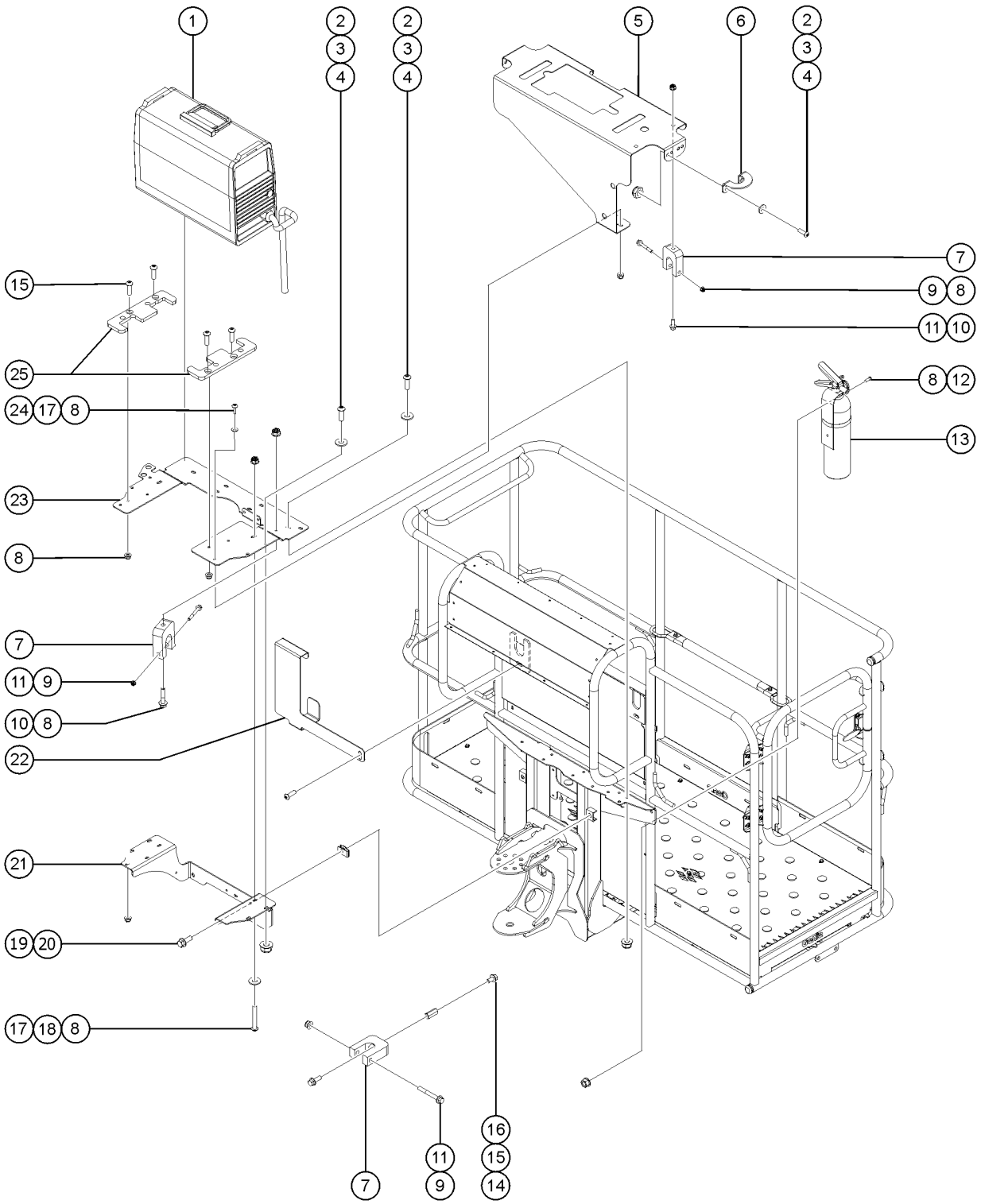

Item	Part No.	Description	Qty.
A	214620GT	SOCKET,3P,30A,4 WIRE, FEM	1
B	214621GT	SOCKET, BOOT, 3P, 30A, 4 WIRE	1
C	214623GT	PLUG, 3P,30A, 4 WIRE, MALE	1
D	214622GT	PLUG, BOOT, 3P, 30A, 4 WIRE	1
E	106275GT	KIT,WELD LEADS ASSY,V275S	1
F	110276-4900GT	FIRE SLEEVE, 1.25" (S60XC) (from S65XCH-48880)	2
G	110276-4100GT	FIRE SLEEVE, 1.25" (S65XC) (from S65XCH-48880)	1
H	110276-5600GT	FIRE SLEEVE, 1.25" (S65XC) (from S65XCH-48880)	2
I	110276-3600GT	FIRE SLEEVE, 1.25" (S65XC) (from S65XCH-48880)	2
J	110276-2800GT	FIRE SLEEVE, 1.25" (S60XC & S65XC) (from S65XCH-48880)	2
K	110276-2400GT	FIRE SLEEVE, 1.25",24"L (S65XC) (from S65XCH-48880)	3
1	101525GT	WELDER,INVERTEC V275-S (Lincoln)	1
1B	1312271GT	WELDER,MILLER,CST 282	1
2	128322GT	SCREW,5/16-18X1.00,SECURITY TO	11
3	825358GT	WASHER,FLAT,5/16,USS,ZAG	11
4	1274167GT	NUT,NYLOCK FLG,5/16-18,F,ZAG	11
5	1277207GT	BRACKET,WELDER COVER,XC	1
6	217366GT	BRACKET,WELDER TOP	2
7	1288455GT	CLAMP, .820 DIA CABLE, TYPE-D, UHMW to SN S65XCH-49623	4
7B	13268GT	CLAMP,0.75,#12 X 1/4,RUB CUSH from SN S65XCH-49624	4
8	1277924GT	NUT,NYLOCK FLG,1/4-20,F,ZAG (Miller, Welder Ready)	15
8B	1277924GT	NUT,NYLOCK FLG,1/4-20,F,ZAG (Lincoln)	9
9	1253485GT	SCREW,HHF,1/4-20X2,8,ZAG to SN S65XCH-49623	4
9B	824078GT	SCREW,HHF,1/4-20X.75,8,ZAG from SN S65XCH-49624	2
10	824079GT	SCREW,HHF,1/4-20X1,8,ZAG to SN S65XCH-49623	3
10B	824078GT	SCREW,HHF,1/4-20X.75,8,ZAG from SN S65XCH-49624	1
11	1277924GT	NUT,NYLOCK FLG,1/4-20,F,ZAG to SN S65XCH-49623	4
12	1256124GT	SCREW,BHC,1/4-20X.75,F835,ZAG	2

915.1 Welder Option, Platform Components

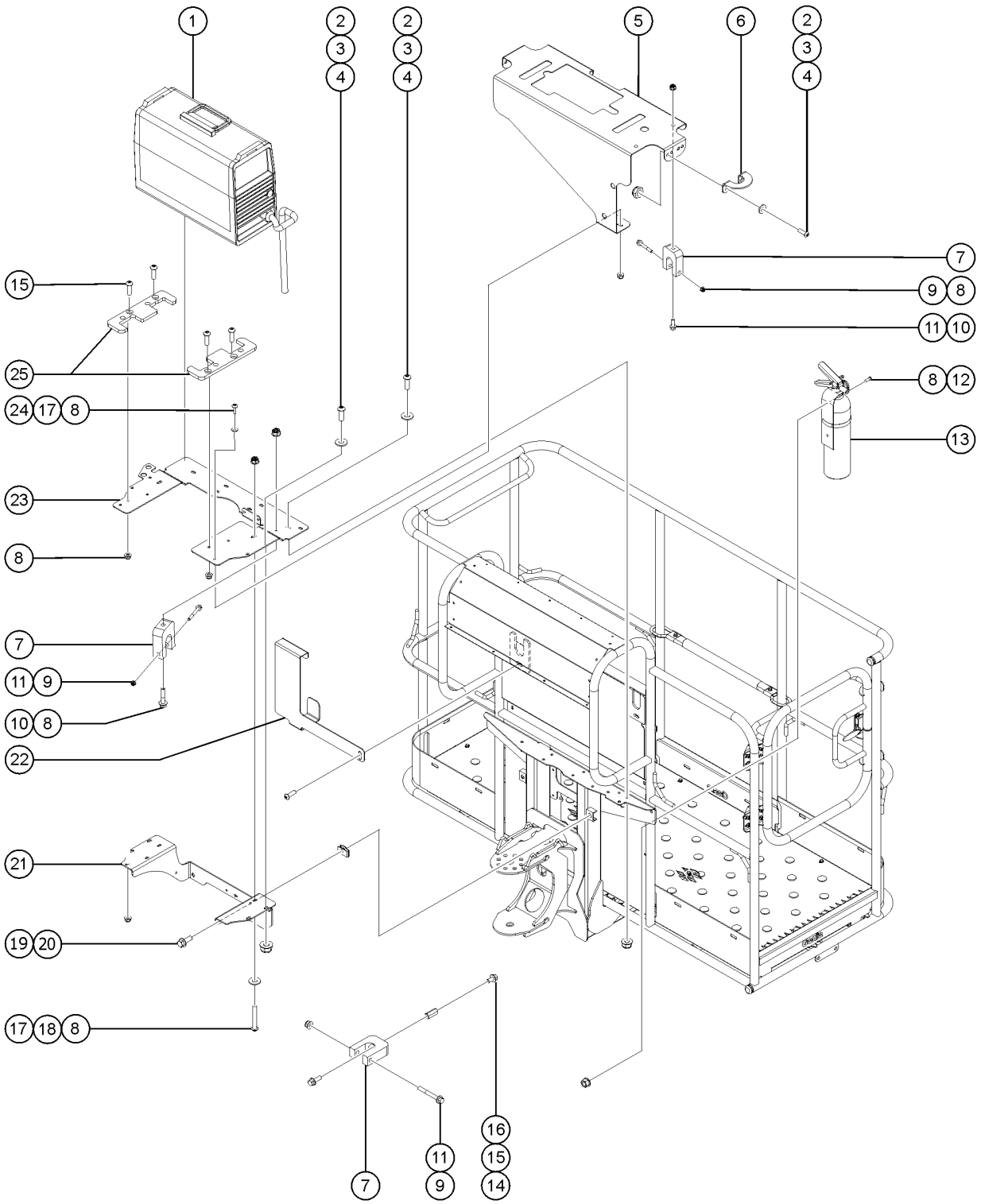

Item	Part No.	Description	Qty.
13	88406GT	FIRE EXTINGUISHER	1
14	824077GT	SCREW, HHF, 1/4-20 X .5, 8, ZAG	1
15	1290424GT	NUT,COUPLING,1/4-20X.875,F594,SS	1
16	824078GT	SCREW,HHF,1/4-20X.75,8,ZAG (Miller, Welder Ready)	5
16B	824078GT	SCREW,HHF,1/4-20X.75,8,ZAG (Lincoln) to SN S65XCH-49623	1
16C	824077GT	SCREW, HHF, 1/4-20 X .5, 8, ZAG (Lincoln) from SN S65XCH-49624	1
17	106141GT	SCREW,SECURITY,1/4-20 X 1.75LG	4
18	824113GT	WASHER,FLAT,USS,1/4,ZAG (Lincoln)	4
18B	824113GT	WASHER,FLAT,USS,1/4,ZAG (Miller, Welder Ready)	2
19	824090GT	SCREW,HHF,3/8-16X1,8,ZAG	2
20	29868GT	SPRING CLIP,3/8-16,.05-.20X.73,ZAG	2
21	1277206GT	FORMING,WELD MNT SPRT,LOWER,XC	1
22	106204GT	BRACKET,V275S WELD LEADS	1
23	1277205GT	FORMING,WELDER SPRT BRKT,XC	1
24	106860GT	SCREW,SECURITY,1/4-20 X 1.00LG	1
25	1312547GT	UHMW,MILLER WELDER RETENTION	2

916.1 3K Hydraulic Generator Option

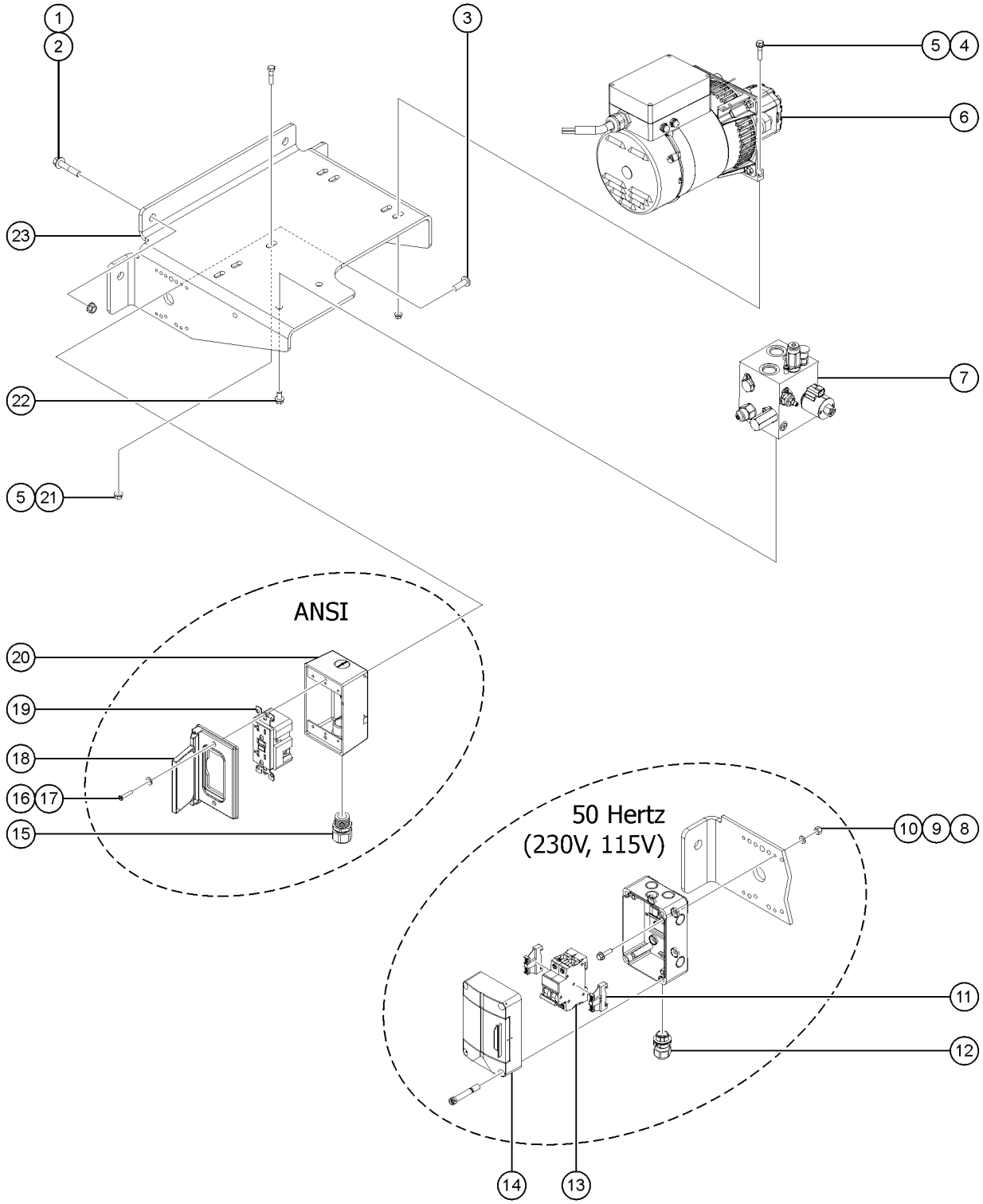

Item	Part No.	Description	Qty.
1	1258670GT	BOLT,CARRIAGE,1/2-13X2.5,5,ZAG	4
2	1274172GT	NUT,NYLOCK FLG,1/2-13,G,ZAG	4
3	1257296GT	SCREW,PHPM-ST,8-32X.50,TYPE F,ZAG	4
4	824087GT	SCREW, HHF, 5/16-18 X 1.25, 8, ZAG	2
5	1274167GT	NUT,NYLOCK FLG,5/16-18,F,ZAG	3
6	1279869GT	GEN, 3.0 kW, 50Hz, DUAL VOLTAGE (non-ANSI)	1
6-	824220GT	SCREW,PHPM SEMS ET,10-24X.5,ZA	
6B	1272433GT	GEN, 3.0 KW, 120V/60HZ (ANSI)	1
6B-	824220GT	SCREW,PHPM SEMS ET,10-24X.5,ZA	
7		REF. MANIFOLD, HYD, LIFT POWER, WELDER GENERATOR (refer to 405.1)	1
8	826214GT	NUT,TL,M5-0.8,DIN980,10,ZAB	4
9	826215GT	WASHER,FLAT,M5,DIN125,ZAB	4
10	218458GT	SCREW,HHF,M5-0.8X20,DIN6921,10.9,ZAB	4
11	74913GT	END STOP, DIN RAIL,SCREW CLAMP	2
12	1287081GT	CORD GRIP, CLICK 20, BLACK, 0.276-0.512	2
13	1261795GT	RCBO, 10A, 30MA, TYPE B, 240V, 50HZ (230V)	1
13B	231868GT	RCBO,16A,30MA,6KA 110/230VAC (115V)	1
14	1269086GT	ENCLOSURE, FUSE, MODULAR, 100x150x96, IP65	1
15	7056GT	CONN, SQZ, 1/2NPT, 0.38-0.50,SM	1
16	1253489GT	SCREW,FHPM,6-32 X .75,ZAG	2
17	1257390GT	WASHER,FLAT,#8,SAE,ZAG	8
18	74006GT	COVER,GFCI,HORIZONTAL,WEATHER	1
19	80543GT	RECEPTACLE, 120VAC, 20A, GFCI	1
20	1310378GT	T-BOX, 2.75 X 4.5 X 2.0**	1
21	824066GT	SCREW,HHC,5/16-18X1.375,8,ZAG	1
22	824089GT	SCREW, HHF, 3/8-16 X .75, 8, ZAG	2
23	1311053GT	BRACKET, GENERATOR 13 kW, S65XC	1

917.1 Generator Option - Hoses and Fittings

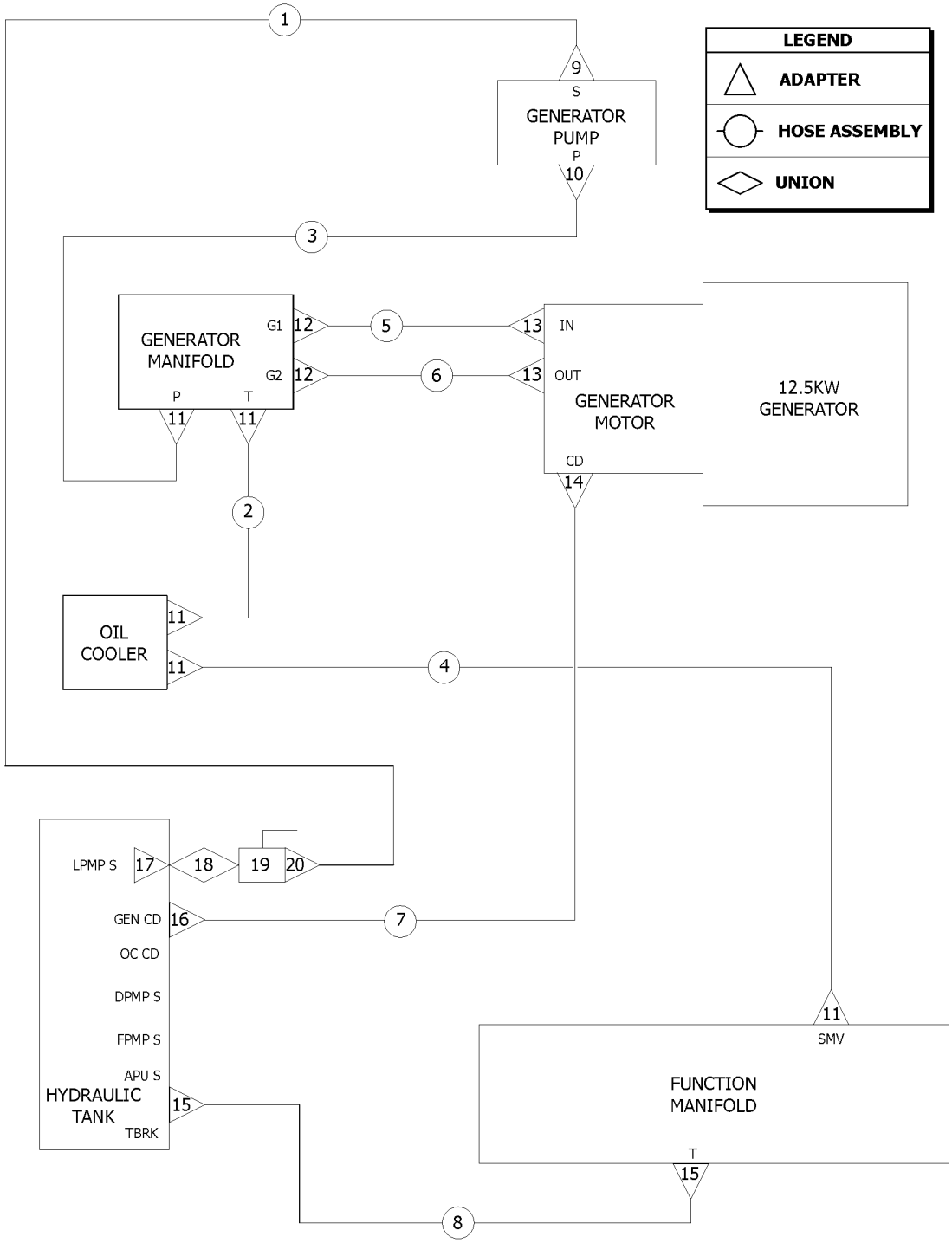

Item	Part No.	Description	Qty.
1	1288891-7874GT	HOSE ASSY,1"	1
2	61074-9646GT	HOSE ASSY,1,STR FEM,45 FEM	1
3	61074-5710GT	HOSE ASSY,1,STR FEM,90 FEM	1
4	61074-5710GT	HOSE ASSY,1,STR FEM,90 FEM	1
5	61073-2697GT	HOSE ASSY,3/4,STR FEM,90 FEM	1
6	61073-3012GT	HOSE ASSY,3/4,STR FEM,90 FEM	1
7	49130-9843GT	HOSE ASSY,3/8,STR FEM,STR FEM,	1
8	88949-3828GT	HOSE ASSY 1",STR FEM,STR FEM	1
9	88936GT	CONN,520120-20-16	1
10	48959GT	FITTING,ELBOW,90D,520220-12	1
11	48960GT	FITTING,CONN,520120-12***	5
12	61610GT	CONN,LONG,520122-12***	2
13	48974GT	ELBOW,90D,520220-12-10	2
14	48915GT	ELBOW,90D,520220-6	1
15	48984GT	CONN, 520120-16	2
16	48929GT	FITTING,ELBOW,90D,520220-6-8	1
17	101491GT	STRAINER,20 SAE F/24 SAE M***	1
18	61263GT	UNION,STR.THREAD 20	1
19	101494GT	VALVE,BALL,FSAE-20,FSAE-20	1
20	75654GT	CONN,520120-20	1

918.1 Oil Cooler Components

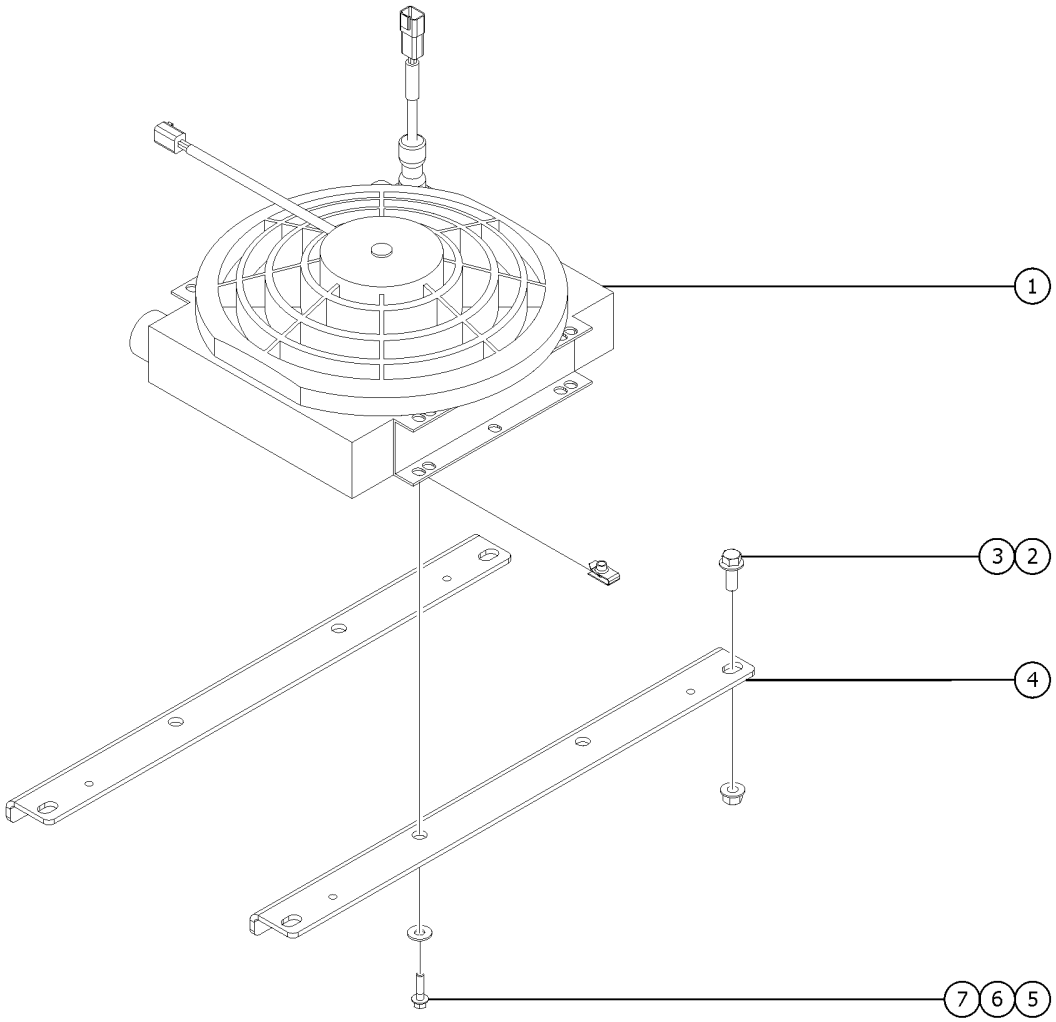

Item	*Part No.*	*Description*	*Qty.*
1	71259GT	OIL COOLER W/FAN, 12VDC	1
1-	75854GT	FAN - VENTED	
1-	75855GT	THERMOSTAT -OIL COOLER (71259)	
2	824090GT	SCREW,HHF,3/8-16X1,8,ZAG	4
3	1274322GT	NUT,NYLOCK FLG,3/8-16,F,ZAG	4
4	1283549GT	FORMING, OIL COOLER SUPPORT, S65XC	2
5	824079GT	SCREW,HHF,1/4-20X1,8,ZAG	4
6	824113GT	WASHER,FLAT,USS,1/4,ZAG	4
7	56912GT	SPRING CLIP,1/4-20,.025-.15X.54,ZAG	4

919.1 2nd LP Tank Carrier

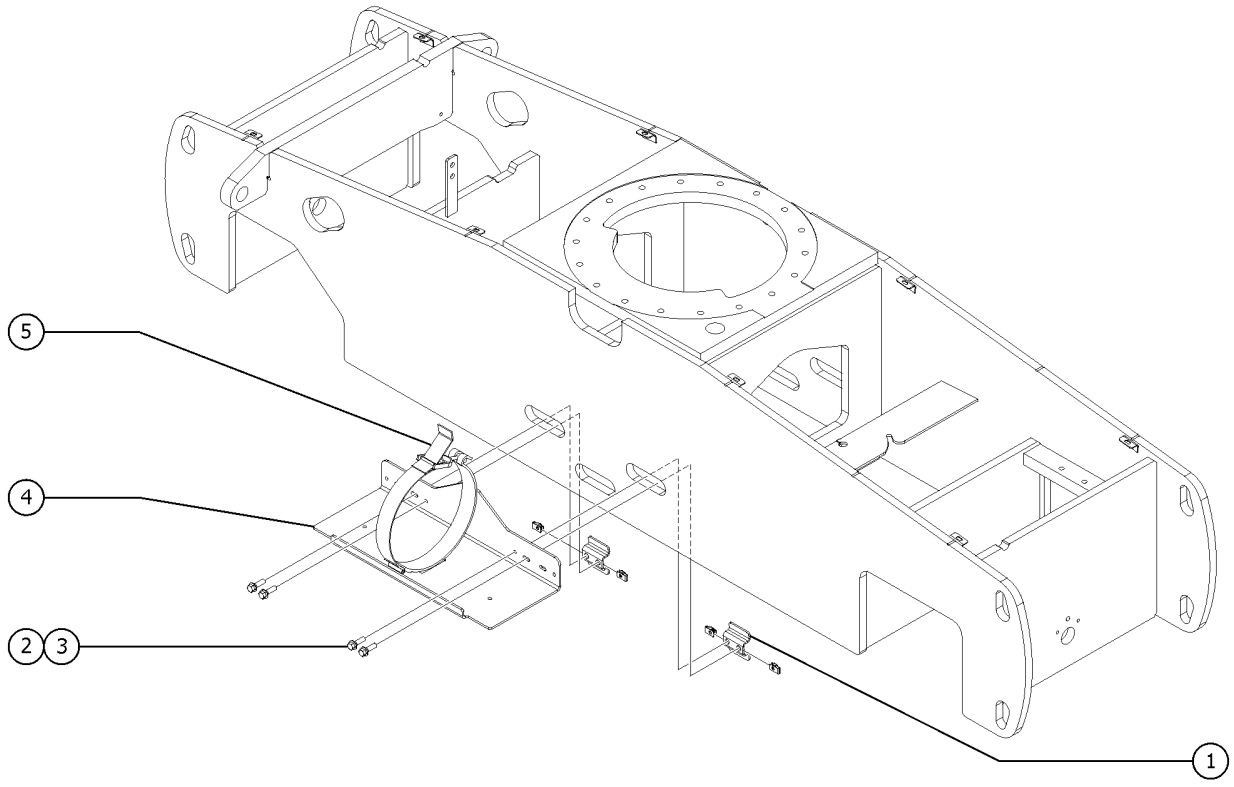

919.1 2nd LP Tank Carrier

Item	Part No.	Description	Qty.
A		NOTE: The 2nd LP Carrier may be located on either side of the machine	
1	1255731GT	FORMING,LP BRACKET MOUNT	2
2	824091GT	SCREW, HHF, 3/8-16 X 1.25, 8, ZAG	4
3	29868GT	SPRING CLIP,3/8-16,.05-.20X.73,ZAG	4
4	1255730GT	WELDMENT,L.P. TANK MOUNT ***	1
5	49000GT	L.P.TANK LATCH	1

920.1 Tow Package

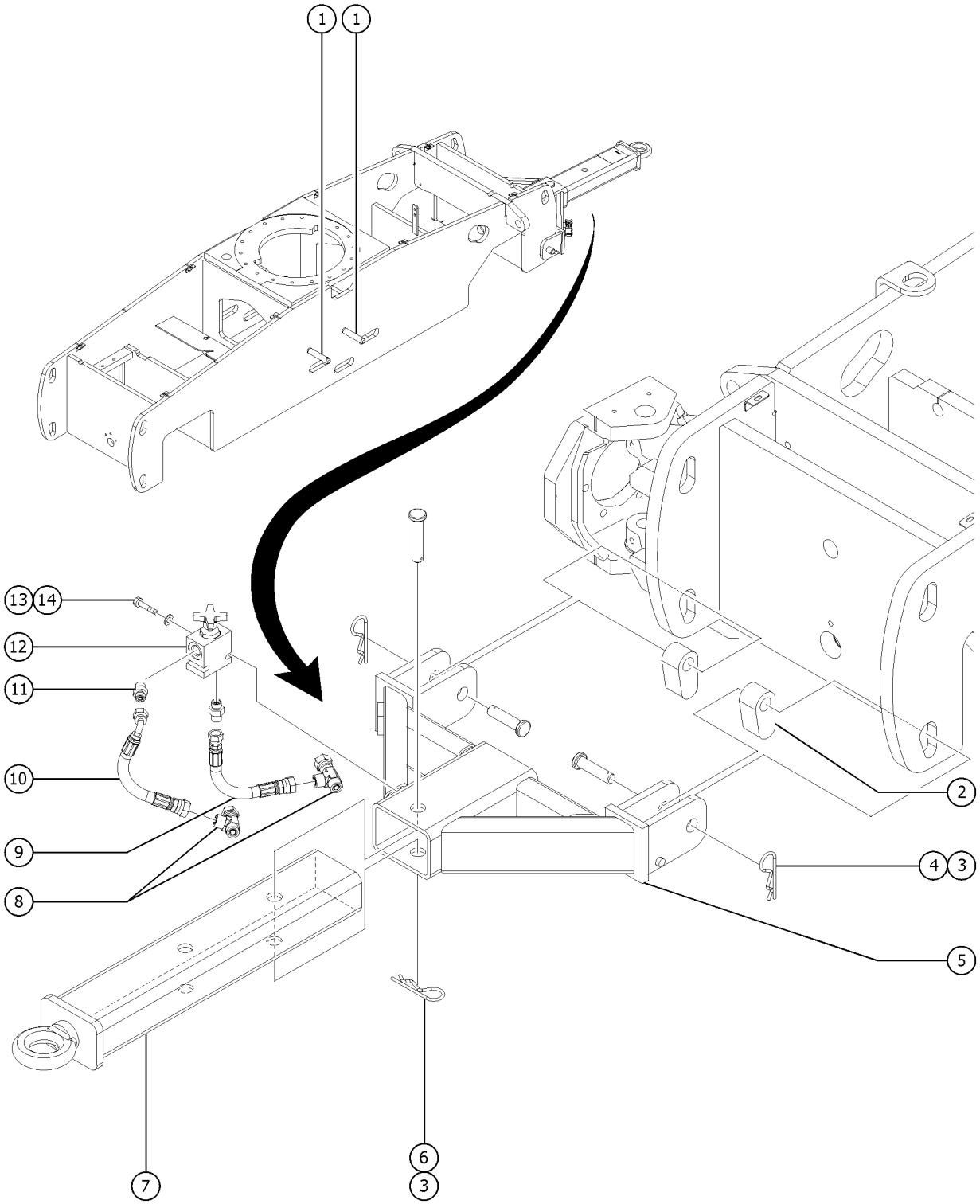

920.1 Tow Package

Item	Part No.	Description	Qty.
1	47025GT	PIN,STORAGE,TOW PACKAGE used to store 94420 WELDMENT,PULL BAR	2
2	1255727GT	PLATE,CHASSIS ATTACHMENT	2
3	233108GT	RUE RING 1.25,ZAG	3
4	1257868GT	PIN,CLEVIS,1.25X5.0,ZAG	2
5	1255728GT	WELDMENT,TOW BAR decal not included, refer to section 100	1
6	1257869GT	PIN,CLEVIS,1.25X6.0,ZAG	1
7	1255726GT	WELDMENT,PULL BAR	1
8	48875GT	TEE,RUN,SWIVEL,520432-6	2
9	49120-7131GT	HOSE ASSEMBLY,1/4" attach to right front steer cylinder	1
10	49163-7144GT	HOSE ASSEMBLY,1/4" includes 90-degree elbow fitting; attach to left steer cylinder	1
11	48912GT	CONN,520120-4-6***	2
12	25282GT	VALVE,NEEDLE,BRAKE RELEASE	1
13	824063GT	SCREW,HHC,1/4-20X1.75,8,ZAG	2
14	824113GT	WASHER,FLAT,USS,1/4,ZAG	2

921.1 Fall Arrest Bar

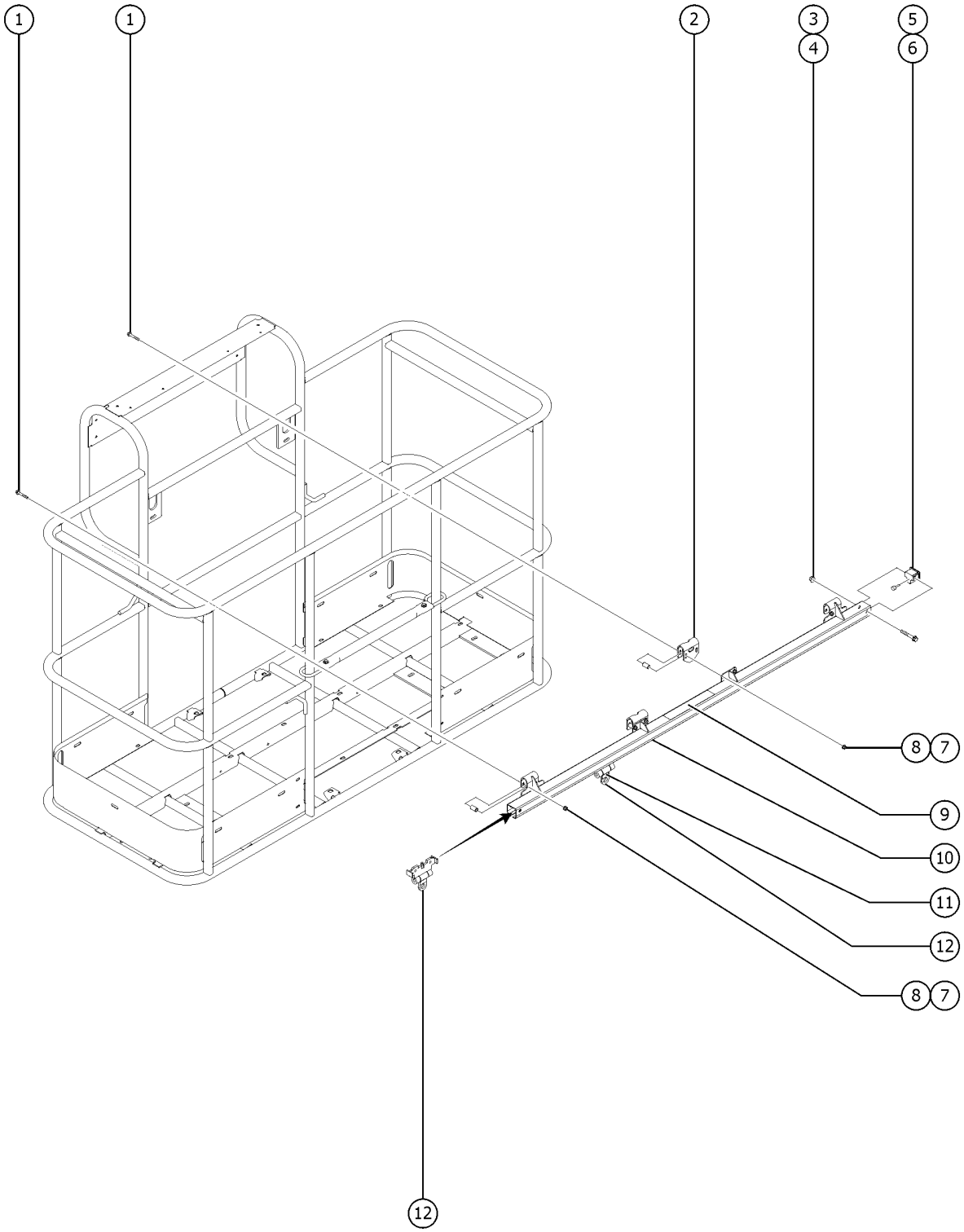

Item	Part No.	Description	Qty.
1	1256856GT	SCREW,HHF,3/8-16X2.5,8,ZAG	8
2	1256389GT	FORMING,INNER HANGER	2
3	1251997GT	NUT,TL FLG,1/2-13,G,ZAG	2
4	1256851GT	SCREW,HHF,1/2-13X3.5,8,ZAG	2
5	1260892GT	END STOP. TFAAS TRACK	2
6	36388GT	BUMPER,RUBBER,.75 X .50H,STUD	2
7	1274322GT	NUT,NYLOCK FLG,3/8-16,F,ZAG	8
8	1256481GT	SPACER, HANGER BRACKET	8
9	1256400GT	DECAL,TFAAS TRACK,WORD	1
9B	1260910GT	DECAL,TFAAS TRACK,SYMBOL	1
9C	1256400FRGT	DECAL,TFAAS TRACK,WORD FR	1
10	1256377GT	ACC,TFAAS FALL ARREST,8FT WORD includes instructions and decals	1
10-	1256379GT	ASSY,TFAAS TRACK,8FT WORD includes decals	
10B	1261022GT	ACC,TFAAS FALL ARREST,8FT SYM includes instructions and decals	1
10B-	1261024GT	ASSY,TFAAS TRACK,8FT SYM includes decals	
10C	1261018GT	ACC,TFAAS FALL ARREST,8FT FR includes instructions and decals	1
10C-	1261020GT	ASSY,TFAAS TRACK,8FT FR includes decals	
10D	1256378GT	ACC,TFAAS FALL ARREST,6FT WORD includes instructions and decals	1
10D-	1256380GT	ASSY,TFAAS TRACK,6FT WORD includes decals	
10E	1261023GT	ACC,TFAAS FALL ARREST,6FT SYM includes instructions and decals	1
10E-	1261025GT	ASSY,TFAAS TRACK,6FT SYM includes decals	
10F	1261019GT	ACC,TFAAS FALL ARREST,6FT FR includes instructions and decals	1
10F-	1261021GT	ASSY,TFAAS TRACK,6FT FR includes decals	
11	40434GT	DECAL,LANYARD ANCHORAGE POINT	1
12	1256439GT	TROLLEY, TFAAS TRACK	1

922.1 Lift Guard Contact Alarm Option

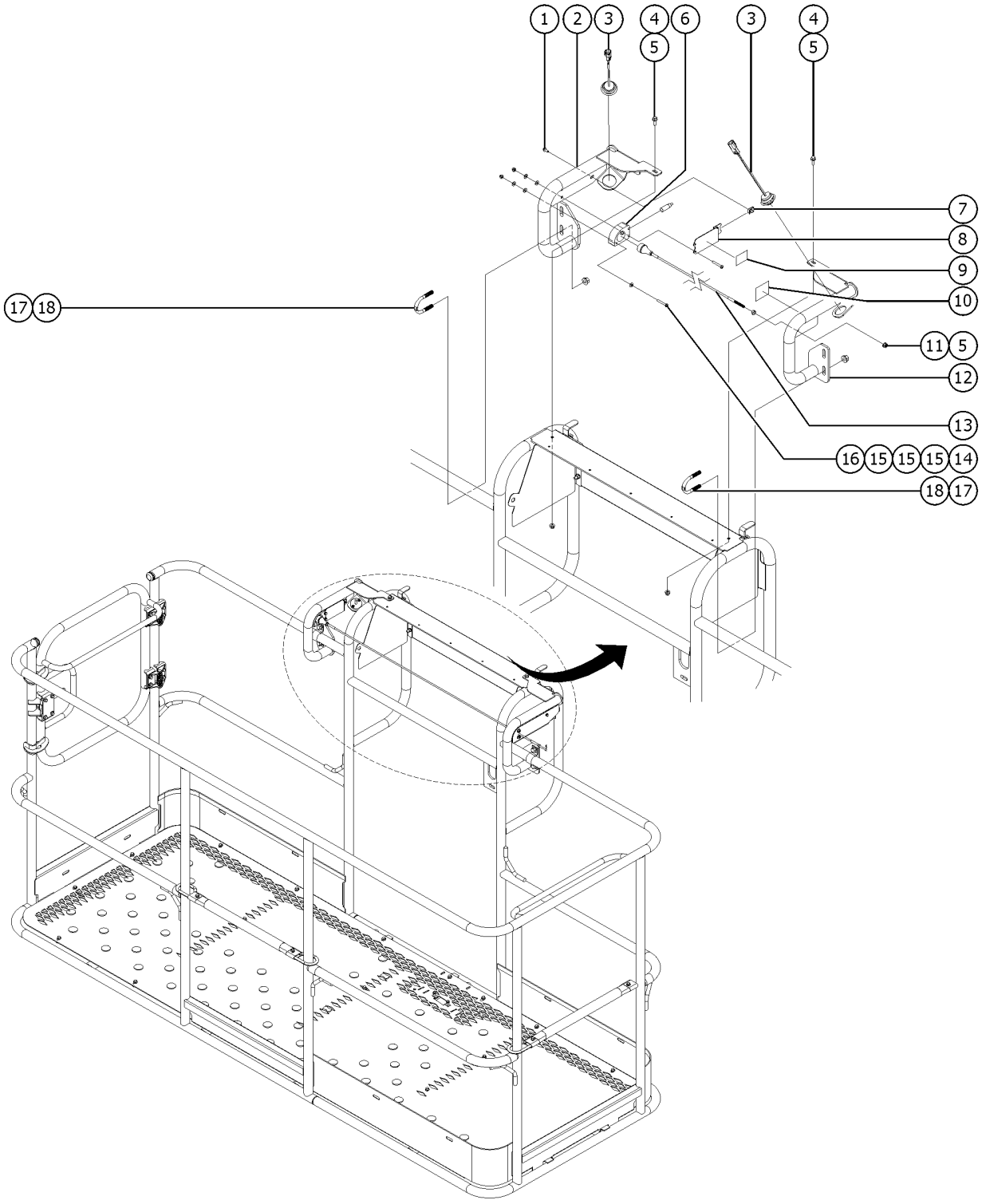

922.1 Lift Guard Contact Alarm Option

Item	Part No.	Description	Qty.
1	1264934	SCREW,HHF,10-24X.5	1
2	1310064	WELDMENT, LEFT CONTACT ALARM, LARGE	1
3	1308384	ASSY, LIGHTS, 12/24 V CONTACT ALARM, AMBER	2
4	824078	SCREW,HHF,1/4-20X.75,8,ZAG	2
5	1277924	NUT,NYLOCK FLG,1/4-20,F,ZAG	3
6	1307644	ASSY, SENSOR W/ HOUSING (Includes holder item 1306899 and sensor part 1278119)	1
6-	1306899	SENSOR HOLDER	
6-	1278119	ASSEMBLY,SENSOR, PROX,CONTACT ALARM	
7	73575	SPRING CLIP,10-24,.025-.125X.468,ZAG	1
8	1277873	FORMING, SENSOR HOLDER	1
9	1278542	DECAL, INSTRUCTION, CONTACT ALARM	1
10	1278982	DECAL, INSTRUCTION, ACTUATOR SWITCH SOCKET	1
11	1261184	NUT,1/4-20,8,ZAG	1
12	1310066	WELDMENT, RIGHT CONTACT ALARM, LARGE	1
13	1306900	CONTACT ALARM WIRE ASSY, LARGE	1
13-	1278124	MAGNET, 1/4-20, 15 LB.	
13-	1307645	CONTACT ALARM WIRE ASSY, LARGE	
13-	1278368	GRIP, CABLE	
13-	1261184	NUT,1/4-20,8,ZAG	
14	1280278	SCREW,PHPM,10-24X1.375,ZAG	3
15	1253185	WASHER,FLAT,#10,USS,ZAG	5
16	1307739	NUT,#10-24 NICKEL PLATED ACORN	3
17	1251600	U-BOLT, FLATTENED, 1.5DIA. X 3/8 UNC,ZAG	2
18	1274322	NUT,NYLOCK FLG,3/8-16,F,ZAG	4

923.1 Positive Air Shutoff

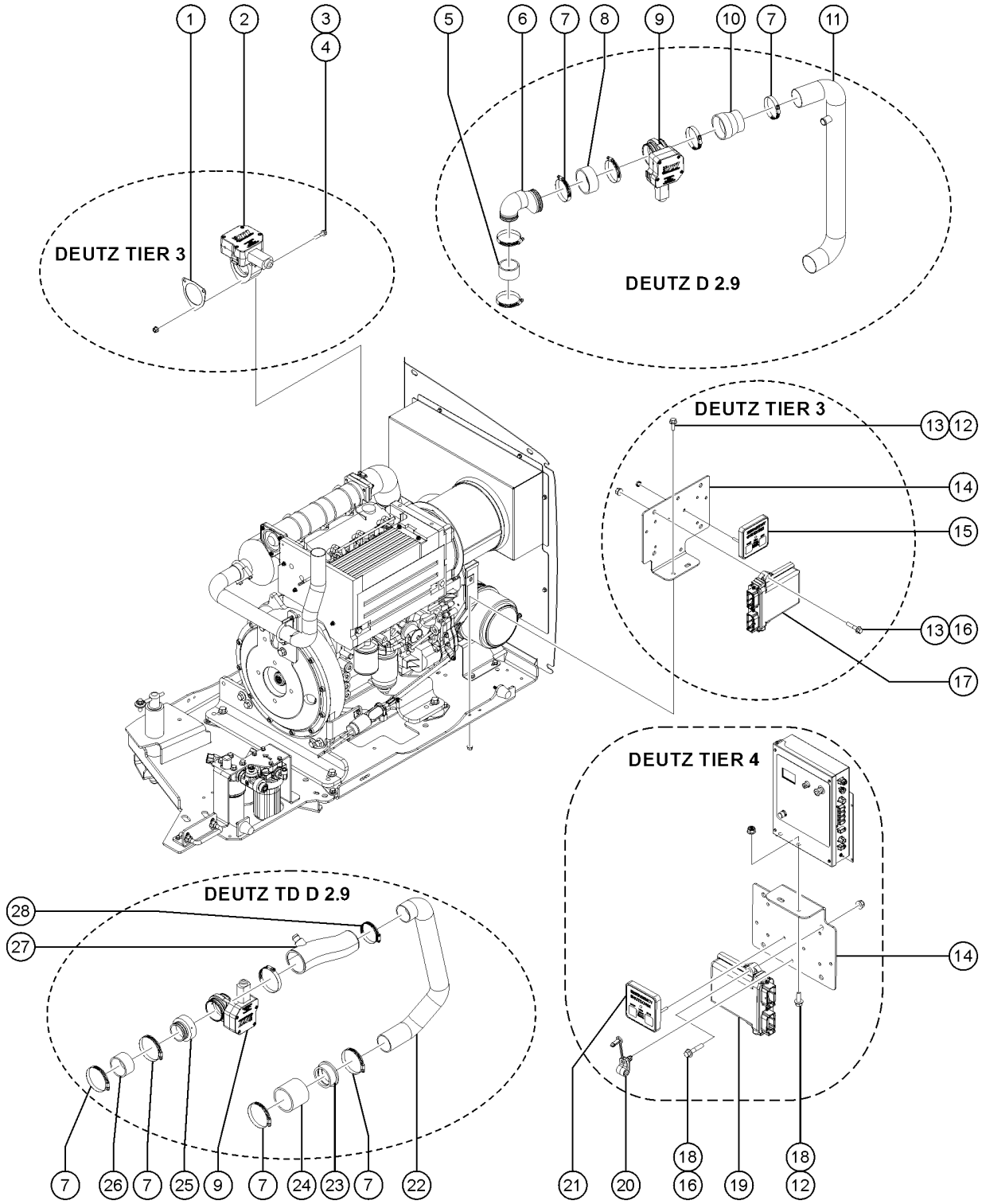

Item	Part No.	Description	Qty.
-		KIT, PASS, DEUTZ TD2.9, S60/65, Z62 Deutz TD D2.9	
-	6146GT	WASHER,FLAT,MS,#10,Y	
-	1251757GT	SCREW,PHPM,10-32X.50,ZAG	
-	1290849GT	HARNESS, CONTROL, PASS	1
-	18666GT	CLAMP,1.00,#16 X 1/4,RUB CUSH DEUTZ TIER 3	3
1	128079GT	GASKET, DEUTZ 2011 INTAKE	1
2	1264497GT	VALVE, PAS, DEUTZ L03I	1
3	1255763GT	SCREW,HHF,5/16-18X1.5,8,ZAG	3
4	824028GT	NUT, TL FLG, 5/16-18, G, ZAG	3
5	1289609GT	HOSE, AIR INTAKE SILICONE	1
6	1289535GT	NOZZLE, DTI PASS 90 D2.9	1
7	30971GT	CLAMP,HOSE,3.00"	
8	1289610GT	HOSE, INTAKE SILICONE 2.25	1
9	1289536GT	VALVE, PASS DEUTZ T4	1
10	1289767GT	HOSE, REDUCER, 2.50" TO 3" INLET, DEUTZ 2.9L	1
11	1289611GT	WELDMENT, STEEL INTAKE TUBE	1
12	824078GT	SCREW,HHF,1/4-20X.75,8,ZAG	
13	824027GT	NUT, TL FLG, 1/4-20, G, ZAG	
14	1264229GT	BRACKET, POSITIVE AIR SHUTOFF	1
15	1264499GT	CONTROLLER, DASH, BASIC PLUS	1
16	824080GT	SCREW, HHF, 1/4-20 X 1.25, 8, ZAG	2
17	1264498GT	CONTROLLER, VCU, DEUTZ L03I	1
18	1277924GT	NUT,NYLOCK FLG,1/4-20,F,ZAG	4
19	1291573GT	CONTROLLER, VCU, DEUTZ 2.9	1
20	219508GT	CLAMP, FIXED DIA, NYLON, 3/8"	1
21	1290107GT	HARNESS, MODULE, ESTOP, PASS	1
22	1289851GT	PASS INTAKE S60 TD2.9	1
23	101640GT	REDUCER,RUBBER 3.0 - 2.5	1

923.1 Positive Air Shutoff

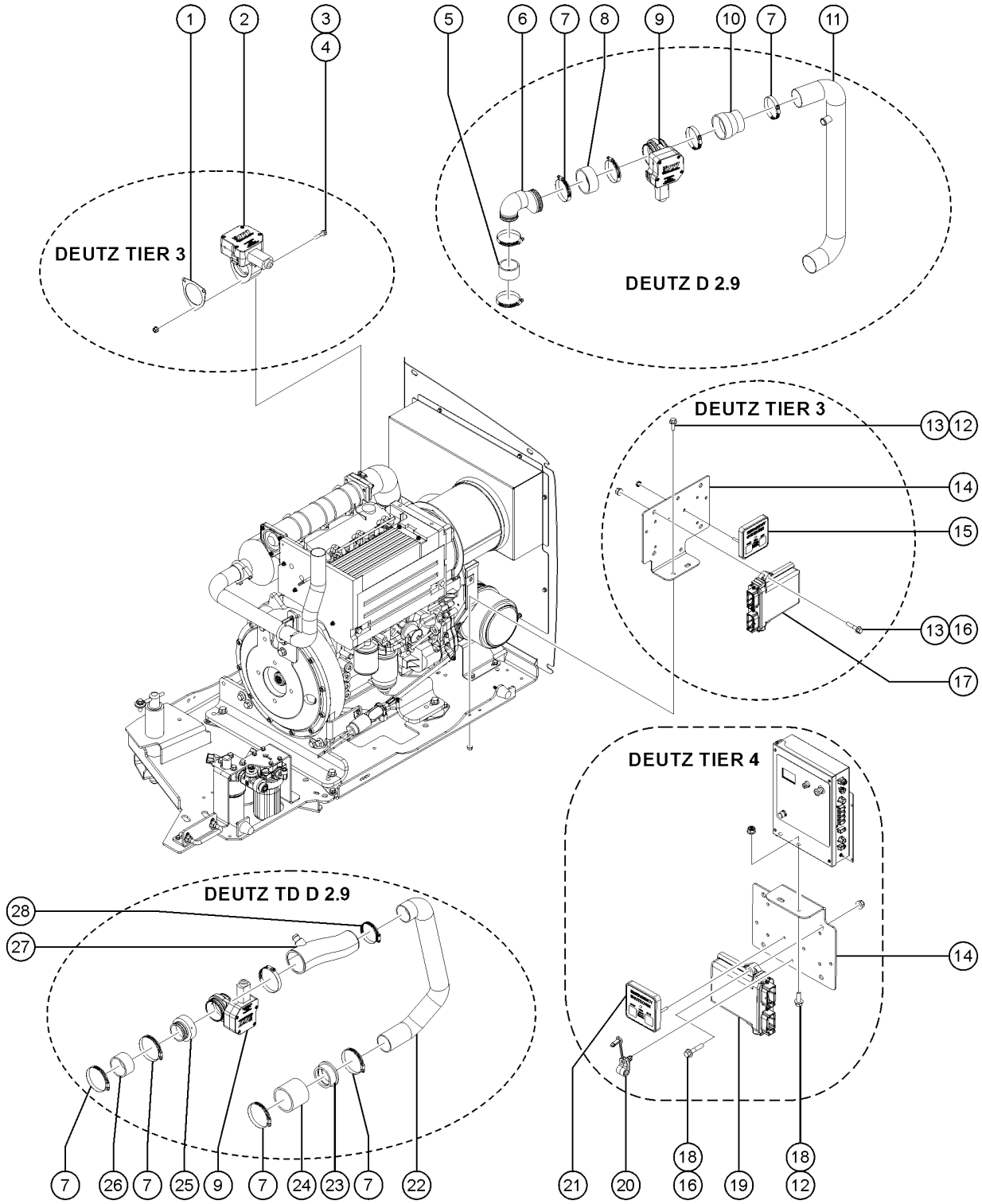

Item	Part No.	Description	Qty.
24	106211-300GT	HOSE,RUBBER 3"ID X .25 BLACK	1
25	1289837GT	NOZZLE 3" TO 2.5"	1
26	1289823GT	HOSE, INTAKE SILICONE 2.5" ID X 1.54" LG	1
27	1289852GT	PASS INTAKE S80 TD2.9	1
28	45435GT	CLAMP,HOSE,2.50"***	1

924.1 Remote Charging

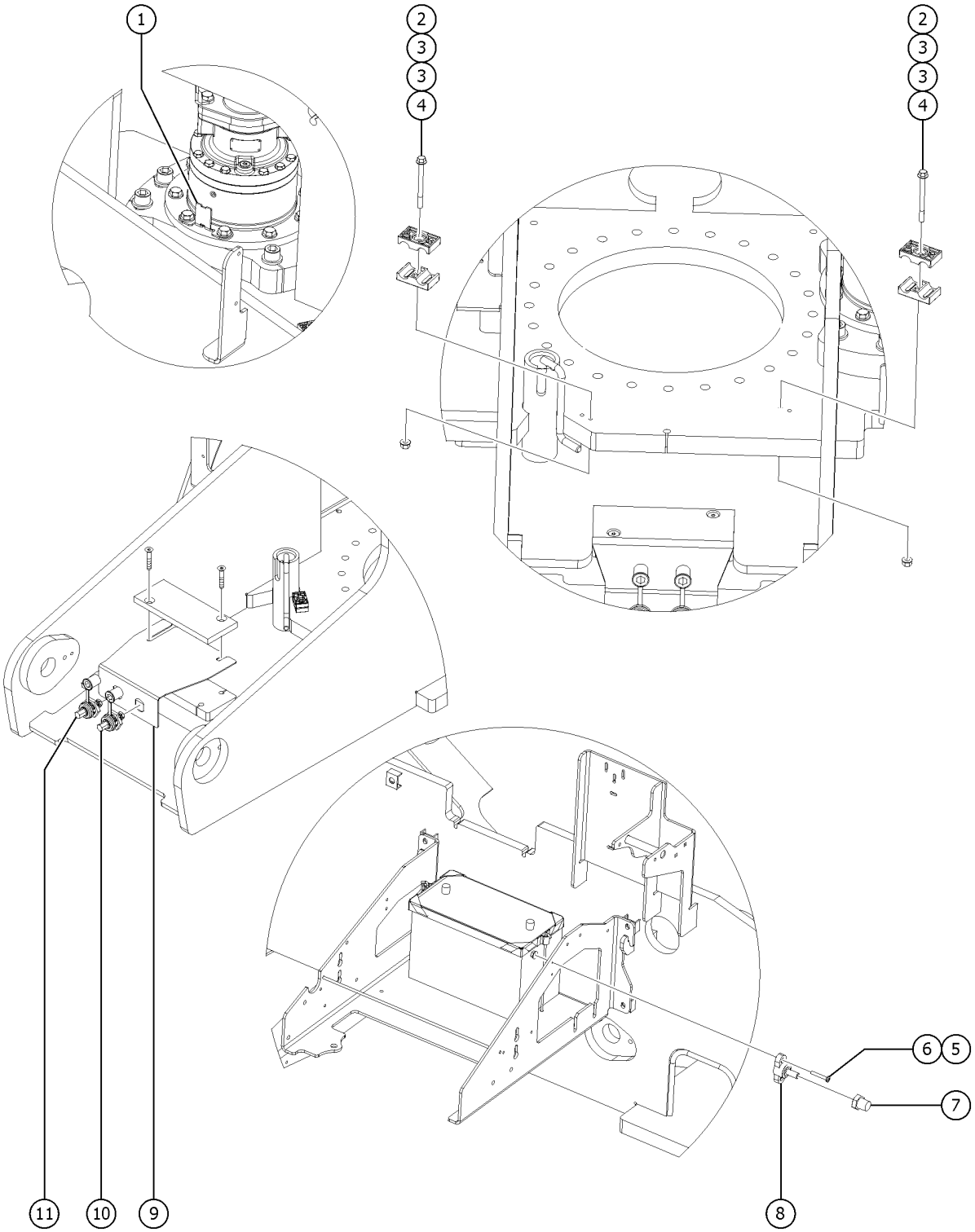

Item	Part No.	Description	Qty.
1	1262678GT	FORMING,HOSE GUIDE	1
2	824084GT	SCREW, HHF, 1/4-20 X 3, 8, ZAG	2
3	78736GT	CLAMP,2 HOSE,PLASTIC,5/8	4
4	824027GT	NUT, TL FLG, 1/4-20, G, ZAG	2
5	825352GT	SCREW,PHPM,10-32X1.25,ZAG	2
6	824032GT	NUT, TL FLG, 10-32, F, ZAG	2
7	1270131GT	TERMINAL, 3/8-16 STUD TO POST	1
8	94981GT	STUD,POWER 3/8" RED	1
9	1269546GT	FORMING, CHARGING LUG BRACKET	1
10	1270310GT	JUMPER TRMNL, BLACK, 3/8" POST	1
11	1270309GT	JUMPER TRMNL, RED, 3/8" POST	1

925.1 Telematics Option

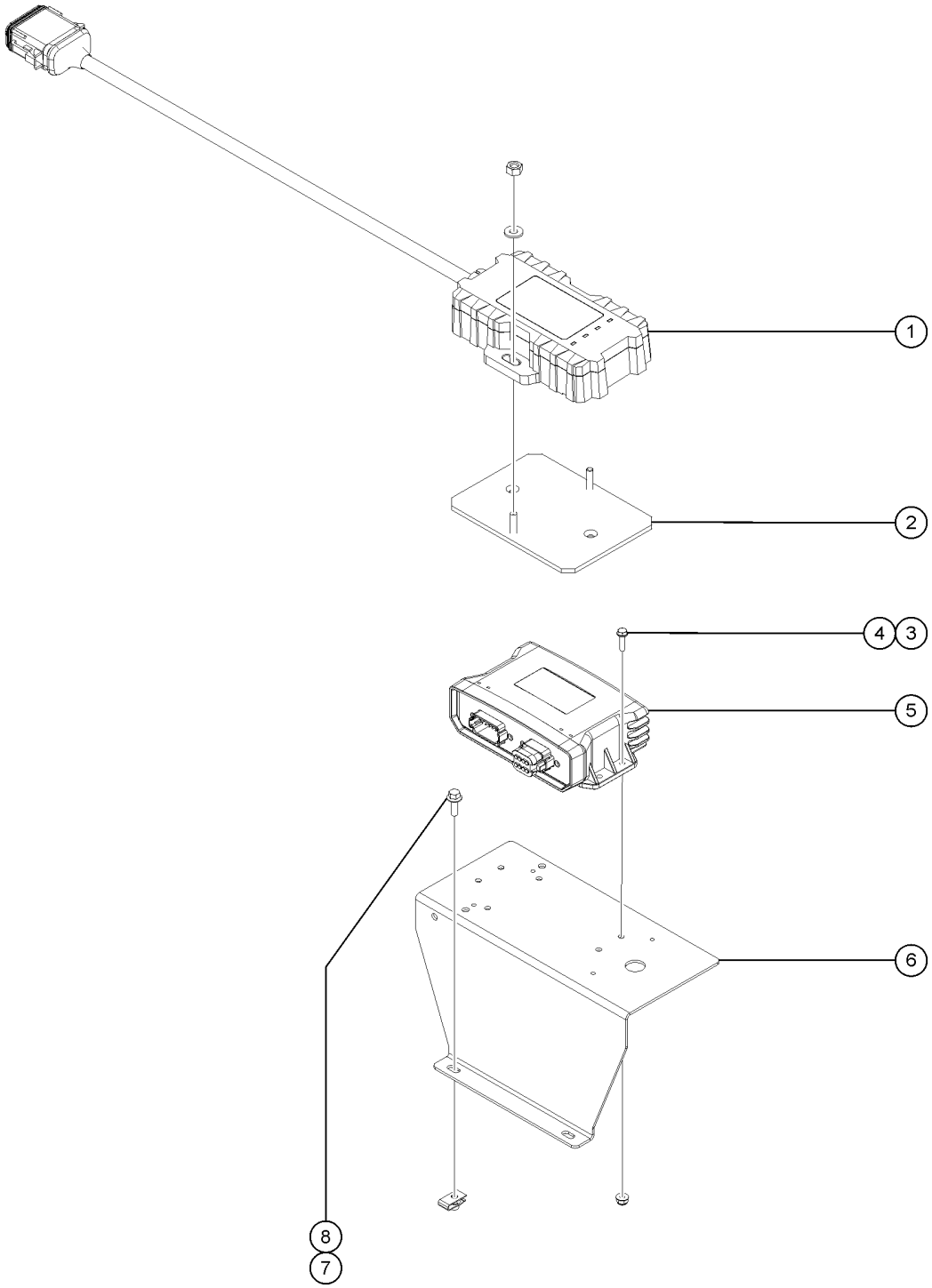

Item	Part No.	Description	Qty.
-	1292198GT	HARNESS, RETROFIT, M7 for first time insulation, must order this Harness with one of the models 1289520GT, 1289521GT, 1289522GT, or 1289523GT	1
-	1294289GT	HARNESS, TELEMATICS, TOPCON, 17IN (US & ACME)	1
-	1292346GT	HARNESS,HERTZ GPS,8" (hertz)	1
1	1289520GT	MODULE, TELEMATICS, ZTR, M7, NORTH AMERICA North America, to SN S65XCH-50605	1
1B	1313592GT	MODULE, ASSY,TELEMATICS, ZTR, M7, GLOBAL from SN S65XCH-50606	
1C	1289521GT	MODULE, TELEMATICS, ZTR, M7, EMEA/APAC EMEA/APAC	
1D	1289522GT	MODULE, TELEMATICS, ZTR, M7, APAC/ANZ APAC/ANZ	
1E	1289523GT	MODULE,TELEMATICS,ZTR,M7,JAPAN Japan	
2	1289561GT	BRACKET, TELEMATICS	1
3	1262031GT	SCREW,HHF,10-24X.75,ZAG	4
4	1283004GT	NUT,NYLOCK FLG,10-24,A,ZAG	4
5	1272326GT	KIT,ZTR,M8	1
6	1281149GT	FORMING,TELEMATICS MOUNT	1
7	824078GT	SCREW,HHF,1/4-20X.75,8,ZAG	2
8	56912GT	SPRING CLIP,1/4-20,.025-.15X.54,ZAG	2

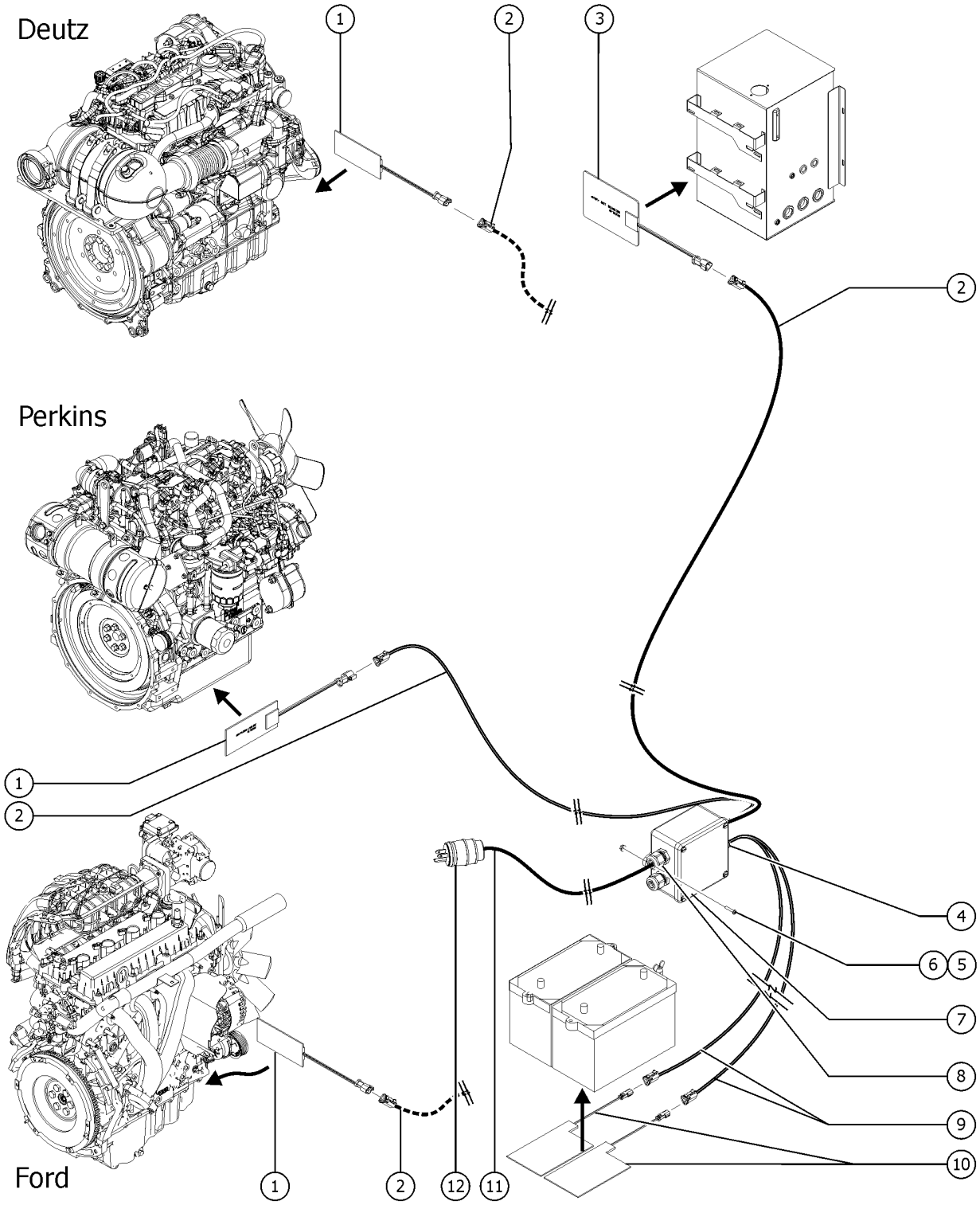
Deutz
1
2
3
2
Perkins
1
2
Ford
1
2
12
11
4
6
5
7
8
9
10

Item	Part No.	Description	Qty.
1	216615GT	ASSY HEATER, MODEL 18, 120V (120V)	1
1A-	119066GT	CONN, RECEP, 3 WAY, DEUTSCH, DT, ENDCAP	
1A-	60441GT	CONN, RECEP, 3 WAY, DEUTSCH, DT, LOCK	
1A-	216616GT	ASSY HEATER,MODEL 18,240V (240V)	1
1B-	119066GT	CONN, RECEP, 3 WAY, DEUTSCH, DT, ENDCAP	
1B-	60441GT	CONN, RECEP, 3 WAY, DEUTSCH, DT, LOCK	
2	216662GT	HARNESS,ENG/HYD HEATER,120V (120V)	1
2A-	101199-200GT	SHRINK TUBE,BLACK,RHW,1/2,3:1	
2A-	119057GT	CONN, PLUG, 3 WAY, DEUTSCH, DT, ENDCAP	
2A-	60427GT	CONN, PLUG, 3 WAY, DEUTSCH, DT, LOCK	
2A-	216683GT	HARNESS,ENG/HYD HEATER,240V (240V)	1
2B-	101199-200GT	SHRINK TUBE,BLACK,RHW,1/2,3:1	
2B-	119057GT	CONN, PLUG, 3 WAY, DEUTSCH, DT, ENDCAP	
2B-	60427GT	CONN, PLUG, 3 WAY, DEUTSCH, DT, LOCK	
3	216612GT	ASSY,120V HEATER, HYD TANK (120V)	1
3A-	119066GT	CONN, RECEP, 3 WAY, DEUTSCH, DT, ENDCAP	
3A-	60441GT	CONN, RECEP, 3 WAY, DEUTSCH, DT, LOCK	
3B	216611GT	ASSY,240V HEATER, HYD TANK (240V)	1
3B-	119066GT	CONN, RECEP, 3 WAY, DEUTSCH, DT, ENDCAP	
3B-	60441GT	CONN, RECEP, 3 WAY, DEUTSCH, DT, LOCK	
4	99778GT	CABLE SQUEEZE CONN,4 WIRE	2
5	826516GT	SCREW, PHPM, 10-32 X 1.0, ZAG	
6	824032GT	NUT, TL FLG, 10-32, F, ZAG	
7	214249GT	COLD WEATHER 120V J BOX ASSY (120V)	1
7B	237711GT	COLD WEATHER 240V J BOX ASSY (240V)	1
8	214536GT	SQUEEZE CONN W/NUT, 2WIRE, 4MM	1
9	216655GT	HARNESS,BATT CABLE,120V (120V)	
9A-	101199-200GT	SHRINK TUBE,BLACK,RHW,1/2,3:1	

926.1 Cold Start Package

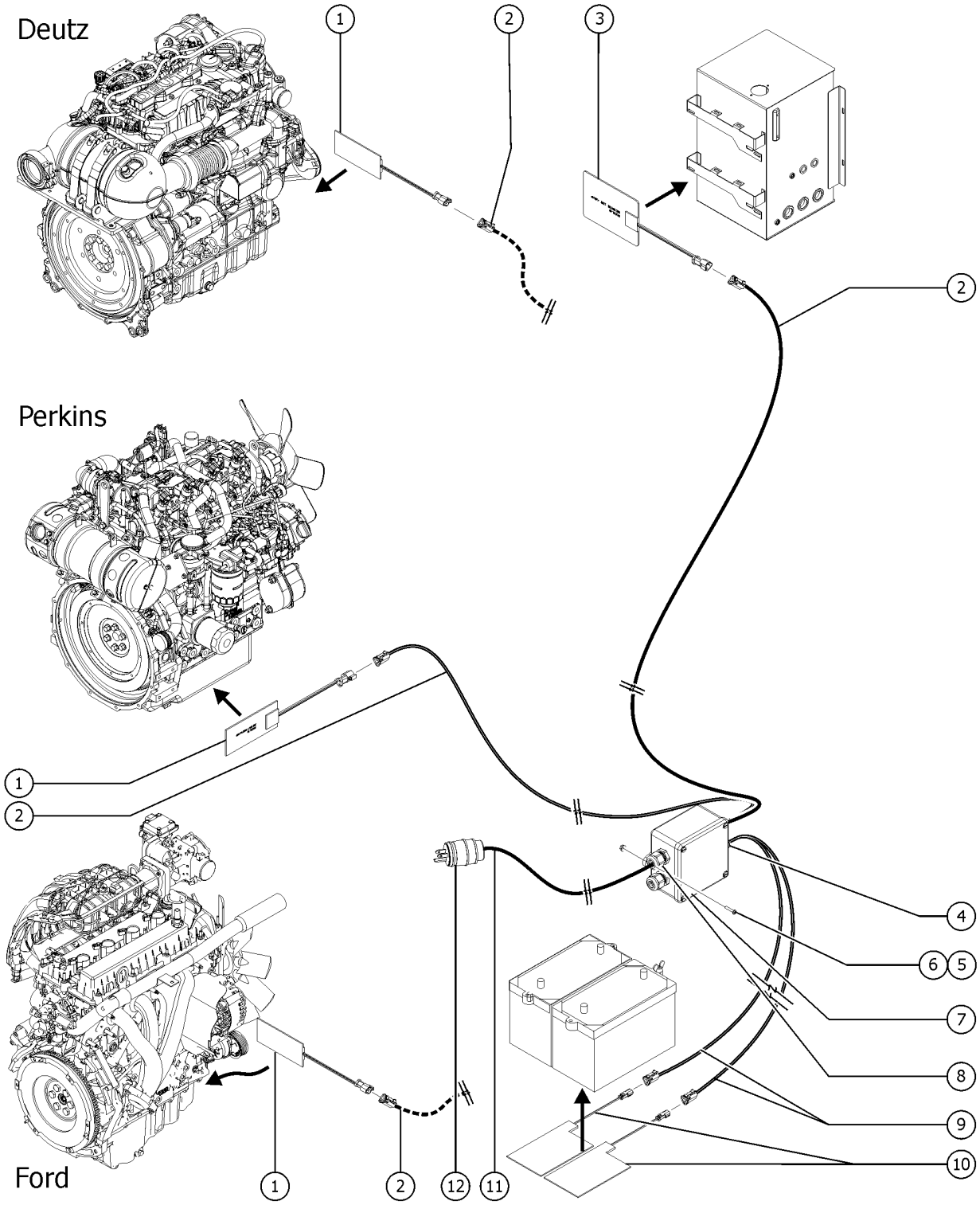

Item	Part No.	Description	Qty.
9A-	119056GT	CONN, PLUG, 2 WAY, DEUTSCH, DT, ENDCAP	
9A-	60425GT	CONN, PLUG, 2 WAY, DEUTSCH, DT, LOCK	
9B-	216676GT	HARNESS,BATT CABLE,240V (240V)	
9B-	101199-200GT	SHRINK TUBE,BLACK,RHW,1/2,3:1	
9B-	119056GT	CONN, PLUG, 2 WAY, DEUTSCH, DT, ENDCAP	
9B-	60425GT	CONN, PLUG, 2 WAY, DEUTSCH, DT, LOCK	
10	216617GT	ASSY, BATTERY HEATER, 120V (120V)	
10A-	119065GT	CONN, RECEP, 2 WAY, DEUTSCH, DT	
10A-	60439GT	CONN, RECEP, 2 WAY, DEUTSCH, DT, LOCK	
10B	216618GT	ASSY BATTERY HEATER,240V (240V)	
10B-	119065GT	CONN, RECEP, 2 WAY, DEUTSCH, DT	
10B-	60439GT	CONN, RECEP, 2 WAY, DEUTSCH, DT, LOCK	
11	216606GT	HARNESS, 120V POWER CORD, 24" (120V) models includes items 8 and 12	1
11A-	101199-200GT	SHRINK TUBE,BLACK,RHW,1/2,3:1	
11B	216607GT	HARNESS, 240V POWER CORD, 24" (240V) models includes item 8	1
11B-	101199-200GT	SHRINK TUBE,BLACK,RHW,1/2,3:1	
12	119403GT	CONN,PLUG 120 AC/15A DOMESTIC	1

927.1 Lift Tools Expo Installer

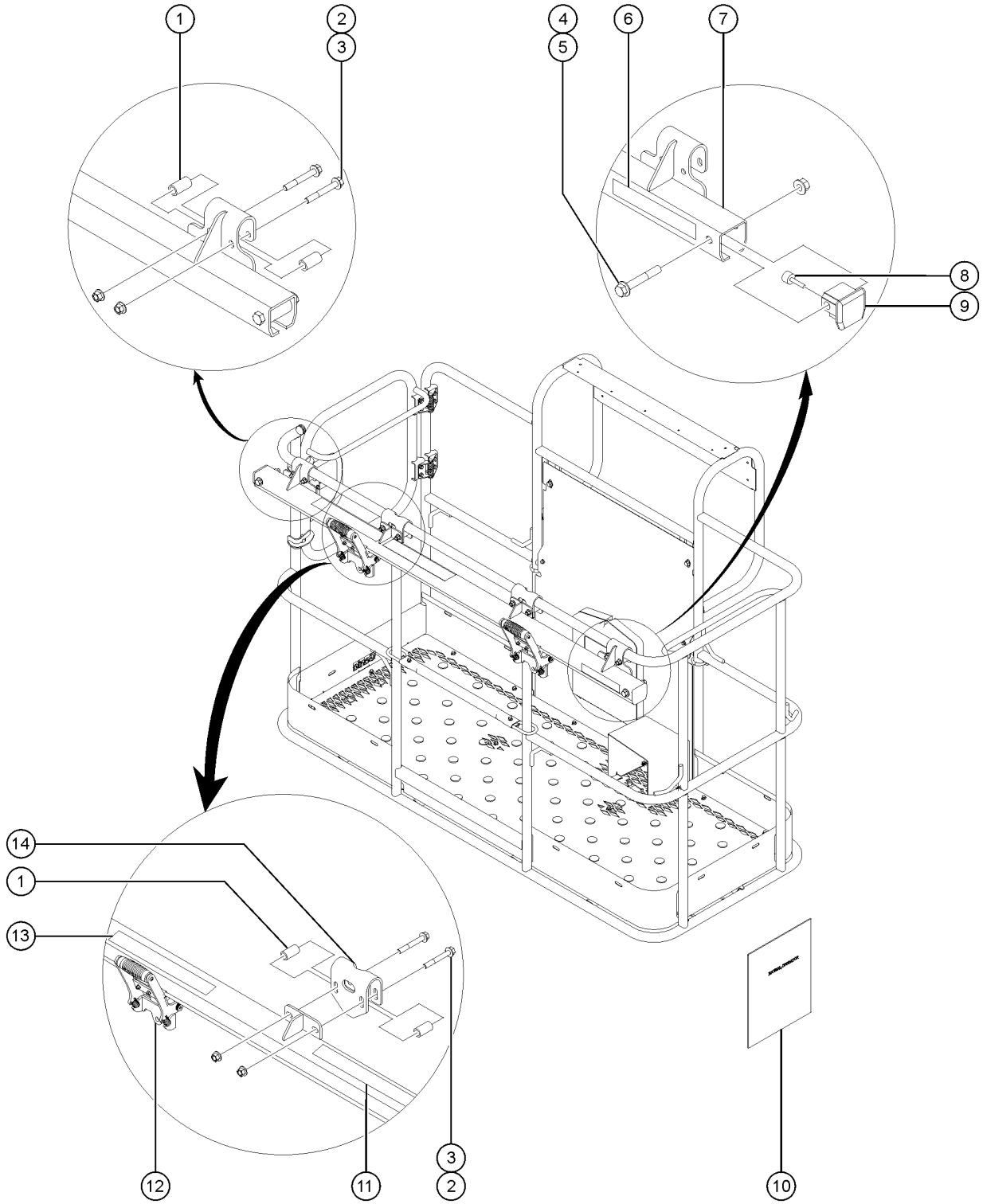

Item	Part No.	Description	Qty.
-	1285719GT	ACC, EXPO INSTALLER, 6FT, WORD (complete kit) 6' Platform with Word decals	
-	1288801GT	ACC, EXPO INSTALLER, 8FT, WORD (complete kit) 8' Platform with Word decals	
-	1286618GT	ACC, EXPO INSTALLER, 6FT, SYM (complete kit) 6' Platform with Symbol decals	
-	1288803GT	ACC, EXPO INSTALLER, 8FT, SYM (complete kit) 8' Platform with Symbol decals	
1	1256481GT	SPACER, HANGER BRACKET	8
2	1256856GT	SCREW,HHF,3/8-16X2.5,8,ZAG Torque to 44 ft-lbs/60 Nm	8
3	1274322GT	NUT,NYLOCK FLG,3/8-16,F,ZAG	8
4	1256851GT	SCREW,HHF,1/2-13X3.5,8,ZAG Tighten until snug. Do not over tighten.	2
5	1251997GT	NUT,TL FLG,1/2-13,G,ZAG	2
6	1286393GT	DECAL, BRANDING, EXPO INSTALLER	1
7	1286620GT	WELDMENT, EXPO INSTALLER TRACK, 6FT	1
7B	1288805GT	WELDMENT, EXPO INSTALLER TRACK, 8FT	
8	36388GT	BUMPER,RUBBER,.75 X .50H,STUD	2
9	1260892GT	END STOP. TFAAS TRACK	2
10	1286259GT	SUPPLEMENT,LIFT TOOLS EXPO INSTALLER	1
11	1286261GT	DECAL,MAX SIDE FORCE, LTEI ,WRDS models with Word decals	1
11B	1286263GT	DECAL,MAX MANUAL FORCE, LTEI ,SYMB models with Symbol decals	1
12	1285721GT	TROLLY,EXPO INSTALLER	1
12-	1289692GT	GRIP,CONTOURED ROUND for 1285721	1
12-	1289693GT	BRAKE, EXPO INSTALLER for 1285721	1
12-	1285730GT	SPRING, COMPRESSION, S/S for 1285721	2
13	1286260GT	DECAL,MAX CAPACITY, LTEI, WRDS models with Word decals	1
13B	1286262GT	DECAL,MAX CAPACITY, LTEI, SYMB models with Symbol decals	1
14	1286621GT	FORMING INNER HANGER, EXPO INSTALLER	2

928.1 2nd Battery Option

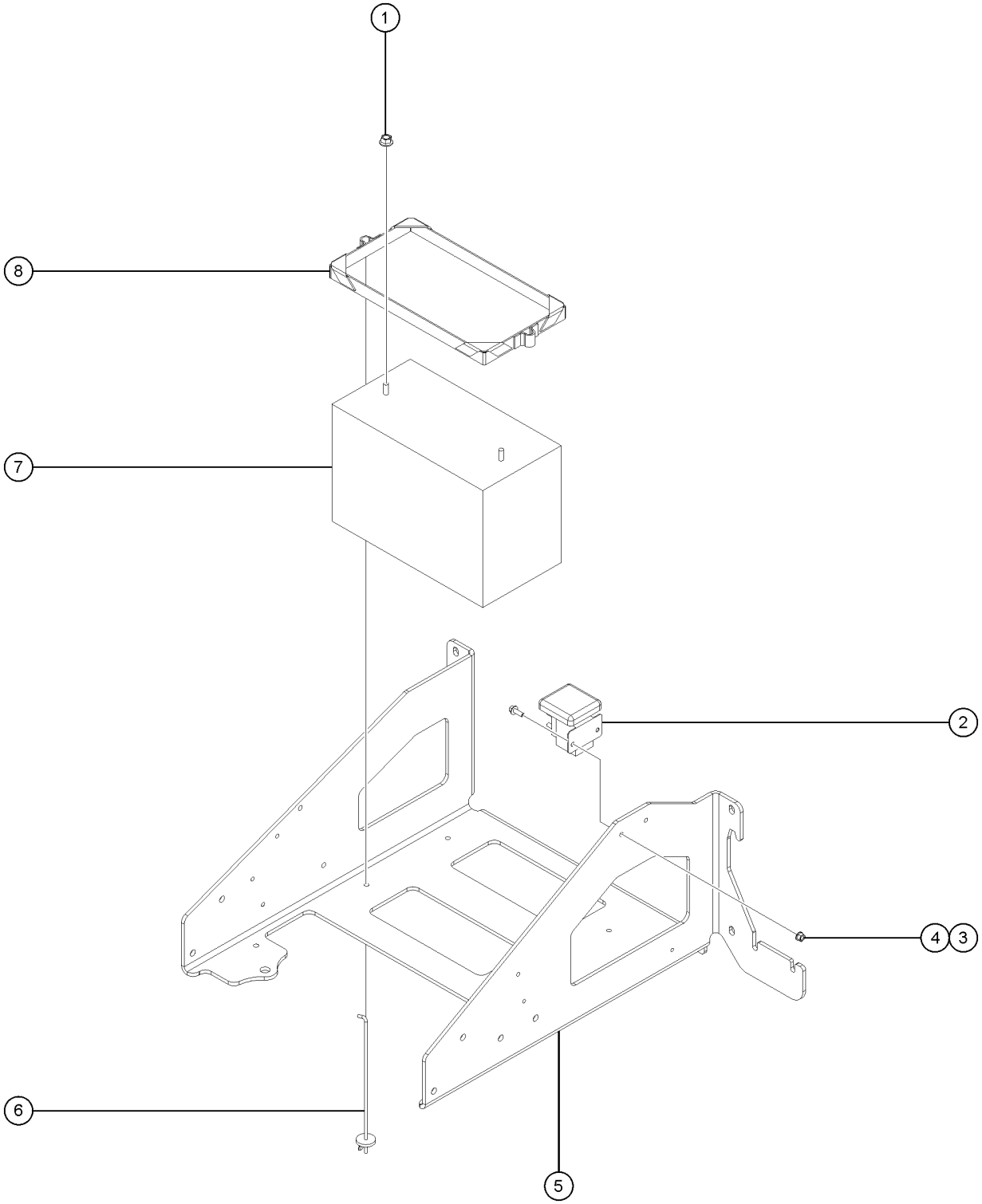

928.1 2nd Battery Option

Item	Part No.	Description	Qty.
1	824029GT	NUT, TL FLG, 3/8-16, G, ZAG	2
2	237068GT	SEPARATOR,DUAL BATTERY,100A	1
3	824027GT	NUT, TL FLG, 1/4-20, G, ZAG	2
4	824078GT	SCREW,HHF,1/4-20X.75,8,ZAG	2
5	77644GT	FORMING,BATTERY TRAY**	1
6	45708GT	HOOK-BATT HOLD DOWN 10"LG	2
7	1303585GT	BATTERY, 12V, 950CCA, FLA	2
8	30144GT	BATTERY HOLD DOWN,GROUP 31	1

929.1 Lift Tools Access Deck - 8 Feet

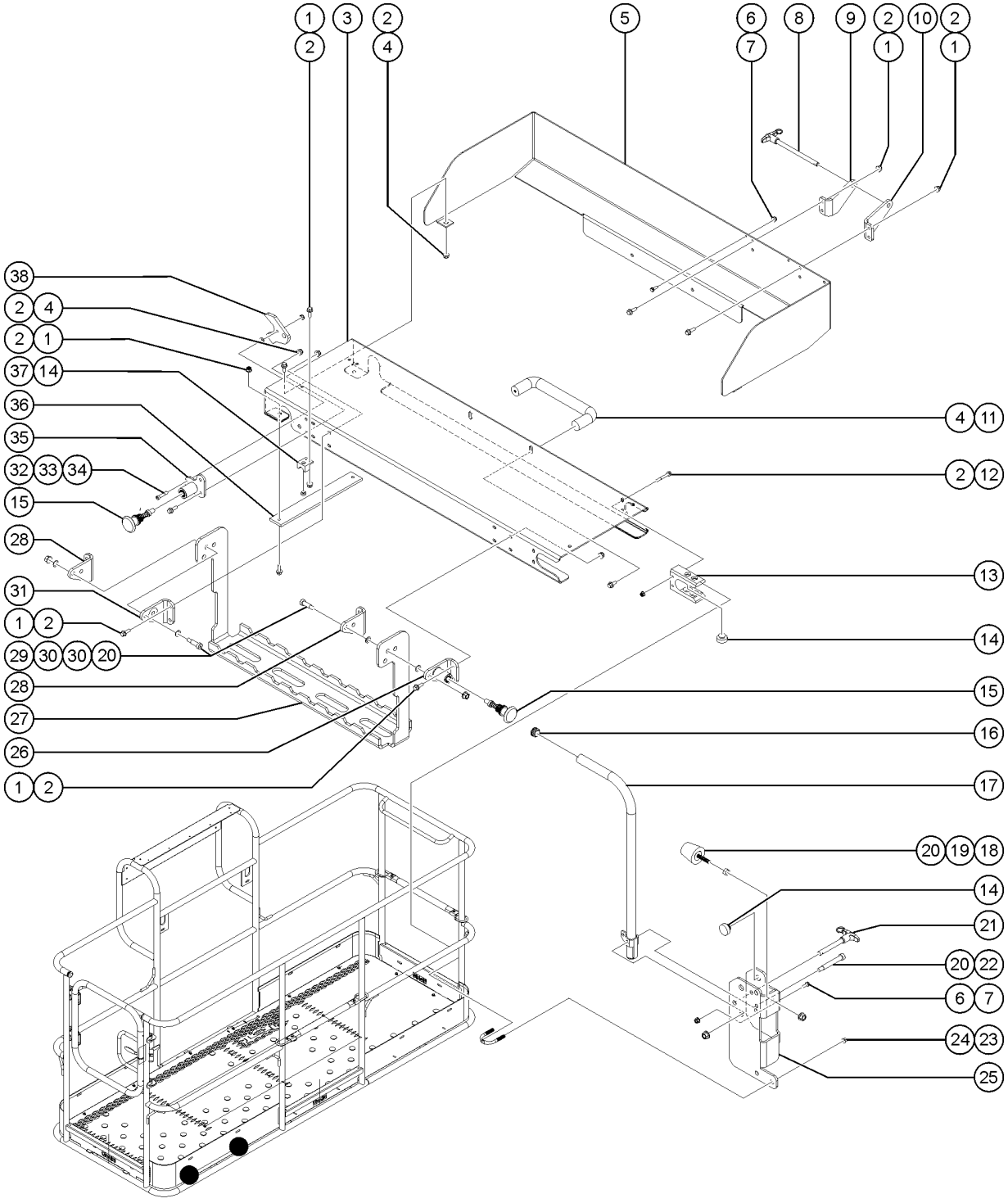

929.1 Lift Tools Access Deck - 8 Feet

Item	Part No.	Description	Qty.
-	1291798GT	KIT, LIFT TOOLS ACCESS DECK, 8FT PLATFORM, ANSI	
1	824078GT	SCREW,HHF,1/4-20X.75,8,ZAG	20
2	1277924GT	NUT,NYLOCK FLG,1/4-20,F,ZAG	28
3	1291799GT	FORMING, ACCESS DECK	1
4	1256855	SCREW,HHF,1/4-20X.625,8,ZAG	6
5	1291800GT	FORMING, ACCESS DECK TOEBOARD, 8FT PLATFORM	1
6	1283004GT	NUT,NYLOCK FLG,10-24,A,ZAG	2
7	1270665GT	SCREW,HHF,10-24X.625,5,ZAG	2
8	1292956GT	PIN, QUICK RELEASE 3/8X5	1
8-	1292932GT	LANYARD, STEEL, 8",NYLON SLEEVE,#10	
9	1292937GT	FORMING, ACCESS DECK LEFT LOCK No longer available,(Replaced by 1292937P)	1
9B	1292937PGT	FORMING,ACCESS DECK LEFT LOCK,PTD	1
10	1292936GT	FORMING, ACCESS DECK RIGHT LOCK	1
11	1291802GT	FORMED, PULL HANDLE	1
12	1253485GT	SCREW,HHF,1/4-20X2,8,ZAG	4
13	1291812GT	WEAR PAD, HORIZANTAL MIDRAIL SLOT	2
14	43392GT	BUMPER,BATTERY BOX & RAILS	8
15	1291811GT	POP PIN, YELLOW	2
16	55753GT	BUMPER, PLASTIC, 1.25 O.D.	2
17	1291815GT	WELDMENT, FOLDING HANDLE	1
18	111580GT	BUMPER,RUBBER,1.19DX1.5X.31-18	1
19	1261250GT	NUT,5/16-18,8,ZAG	1
20	1274167GT	NUT,NYLOCK FLG,5/16-18,F,ZAG	4
21	1291865GT	PIN, QUICK RELEASE 3/8X2-1/2	1
21-	1292932GT	LANYARD, STEEL, 8",NYLON SLEEVE,#10	
22	1291817GT	BOLT,SHS,3/8X2.25X5/16-18,ZAG	1
23	1274322GT	NUT,NYLOCK FLG,3/8-16,F,ZAG	4
24	1251600GT	U-BOLT, FLATTENED, 1.5DIA. X 3/8 UNC,ZAG	2

929.1 Lift Tools Access Deck - 8 Feet

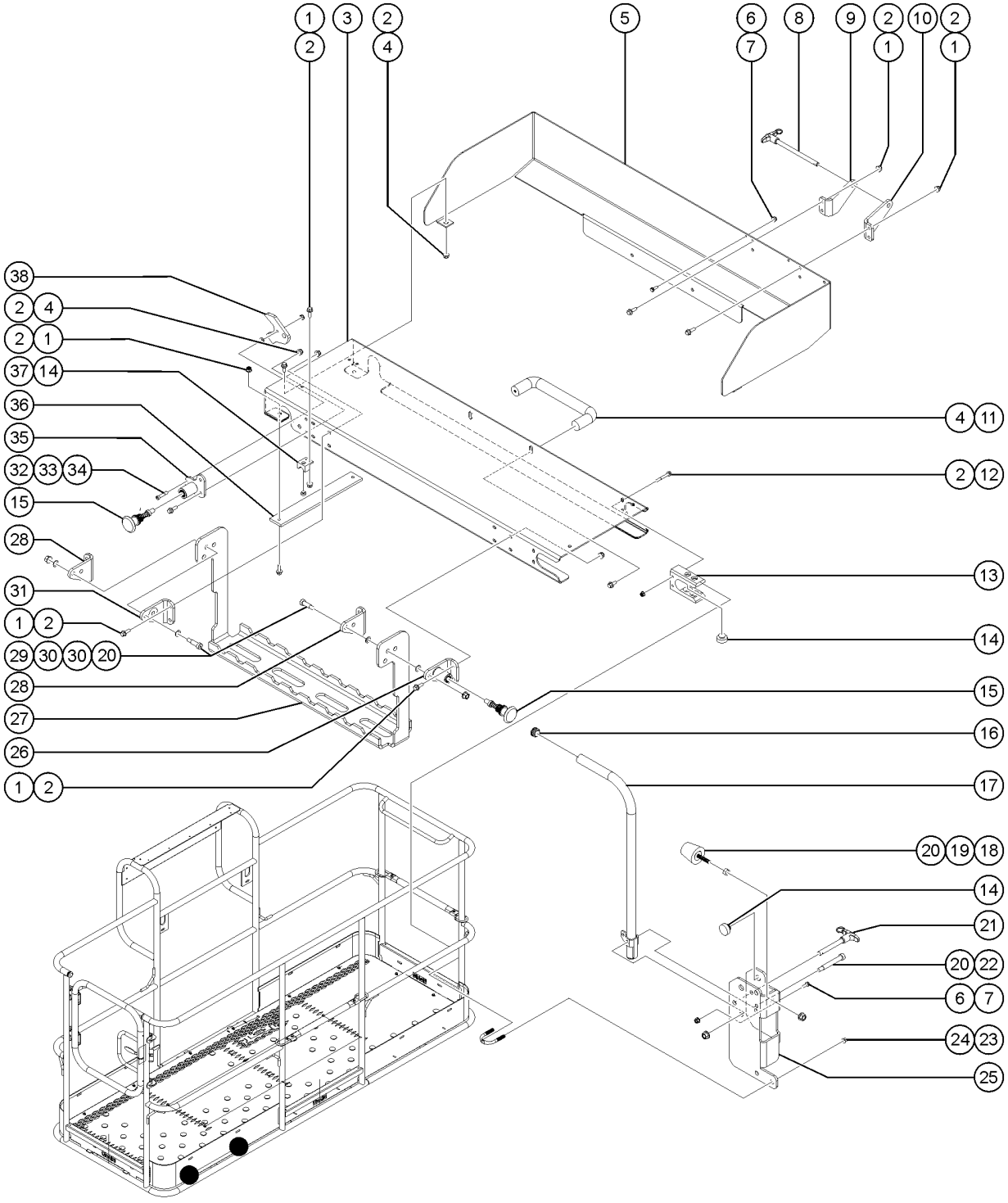

Item	Part No.	Description	Qty.
25	1293706GT	FORMING, ACCESS DECK HANDLE	1
26	1291844GT	WELDMENT, ACCESS DECK STEP LOCK	1
27	1291801GT	FORMING, ACCESS DECK STEP, 8FT PLATFORM	1
28	1291804GT	FORMING, ACCESS DECK LEFT EYE, 8FT PLATFORM	2
29	1291819GT	BOLT,SHS,3/8X7/8X5/16-18,ZAG	2
30	1292828GT	WASHER,FLAT,.39,.625,.036,ZAG	4
31	1291803GT	FORMING, ACCESS DECK RIGHT EYE, 8FT PLATFORM	1
32	1291818GT	BOLT,SHS,1/4X.75X1/4-20,ZAG	1
33	1291821GT	WASHER, FLAT, 1/4X1/16X1/2, AL	1
34	1283026GT	NUT,LP NYLOCK,1/4-20,2,ZAG	1
35	1291809GT	WELDMENT, LIFT TOOLS MIDRAIL LOCK	1
36	1291807GT	PLATE, STIFFENER BAR	2
37	1291813GT	WEAR PAD, VERTICAL MIDRAIL SLOT	2
38	1291806GT	PLATE, MIDRAIL HOOK	1

930.1 Lift Tools Access Deck - 6 Feet

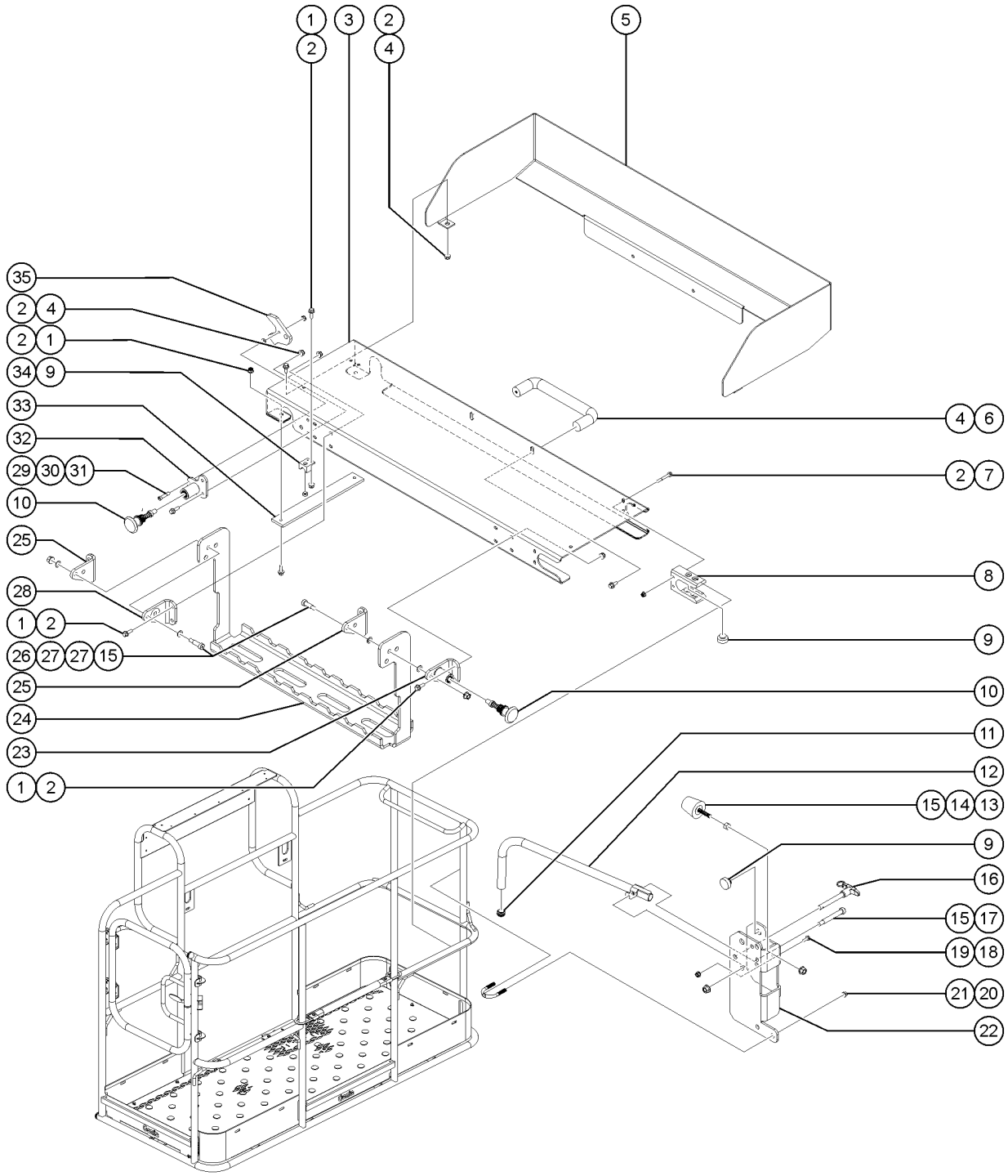

930.1 Lift Tools Access Deck - 6 Feet

Item	Part No.	Description	Qty.
-	1293700GT	KIT, LIFT TOOLS ACCESS DECK, 6FT PLATFORM, ANSI (6 feet)	1
1	824078GT	SCREW,HHF,1/4-20X.75,8,ZAG	16
2	1277924GT	NUT,NYLOCK FLG,1/4-20,F,ZAG	24
3	1293710GT	FORMING, ACCESS DECK	1
4	1256855	SCREW,HHF,1/4-20X.625,8,ZAG	6
5	1293702GT	FORMING, ACCESS DECK TOEBOARD, 6FT PLATFORM	1
6	1291802GT	FORMED, PULL HANDLE	1
7	1253485GT	SCREW,HHF,1/4-20X2,8,ZAG	4
8	1291812GT	WEAR PAD, HORIZANTAL MIDRAIL SLOT	2
9	43392GT	BUMPER,BATTERY BOX & RAILS	8
10	1291811GT	POP PIN, YELLOW	2
11	55753GT	BUMPER, PLASTIC, 1.25 O.D.	2
12	1291815GT	WELDMENT, FOLDING HANDLE	1
13	111580GT	BUMPER,RUBBER,1.19DX1.5X.31-18	1
14	1261250GT	NUT,5/16-18,8,ZAG	1
15	1274167GT	NUT,NYLOCK FLG,5/16-18,F,ZAG	4
16	1291865GT	PIN, QUICK RELEASE 3/8X2-1/2	1
16-	1292932GT	LANYARD, STEEL, 8",NYLON SLEEVE,#10	
17	1291817GT	BOLT,SHS,3/8X2.25X5/16-18,ZAG	1
18	1270665GT	SCREW,HHF,10-24X.625,5,ZAG	1
19	1283004GT	NUT,NYLOCK FLG,10-24,A,ZAG	1
20	1274322GT	NUT,NYLOCK FLG,3/8-16,F,ZAG	4
21	1251600GT	U-BOLT, FLATTENED, 1.5DIA. X 3/8 UNC,ZAG	2
22	1293706GT	FORMING, ACCESS DECK HANDLE	1
23	1291844GT	WELDMENT, ACCESS DECK STEP LOCK	1
24	1293703GT	FORMING, ACCESS DECK STEP, 6FT PLATFORM	1
25	1291804GT	FORMING, ACCESS DECK LEFT EYE, 8FT PLATFORM	2
26	1291819GT	BOLT,SHS,3/8X7/8X5/16-18,ZAG	2

930.1 Lift Tools Access Deck - 6 Feet

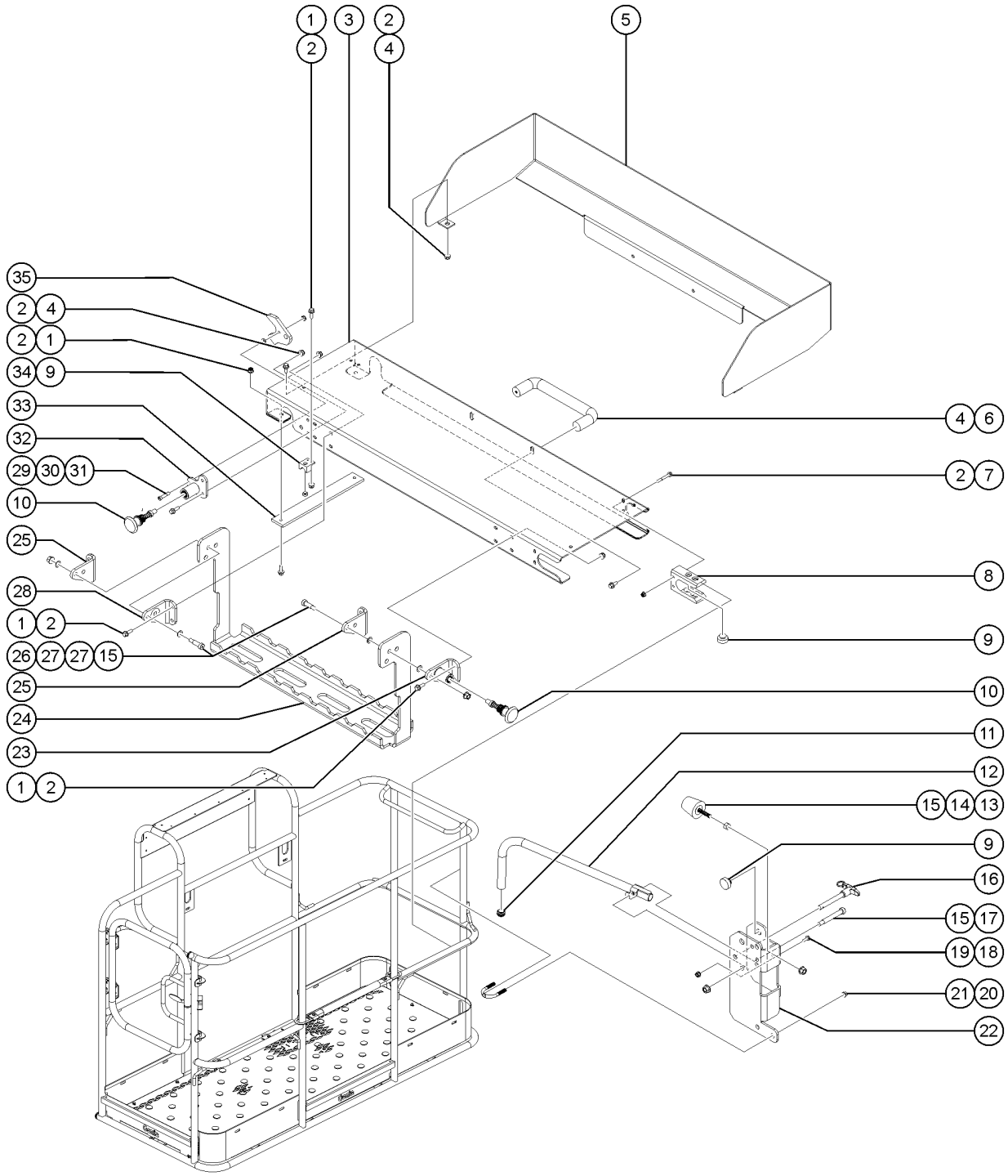

930.1 Lift Tools Access Deck - 6 Feet

Item	Part No.	Description	Qty.
27	1292828GT	WASHER,FLAT,.39,.625,.036,ZAG	4
28	1291803GT	FORMING, ACCESS DECK RIGHT EYE, 8FT PLATFORM	1
29	1291818GT	BOLT,SHS,1/4X.75X1/4-20,ZAG	1
30	1291821GT	WASHER, FLAT, 1/4X1/16X1/2, AL	1
31	1283026GT	NUT,LP NYLOCK,1/4-20,2,ZAG	1
32	1291809GT	WELDMENT, LIFT TOOLS MIDRAIL LOCK	1
33	1293704GT	PLATE, STIFFENER BAR	2
34	1291813GT	WEAR PAD, VERTICAL MIDRAIL SLOT	2
35	1291806GT	PLATE, MIDRAIL HOOK	1

931.1 Lift power welder ready (from SN S60XCH-48880, SN S65XCH-48880)

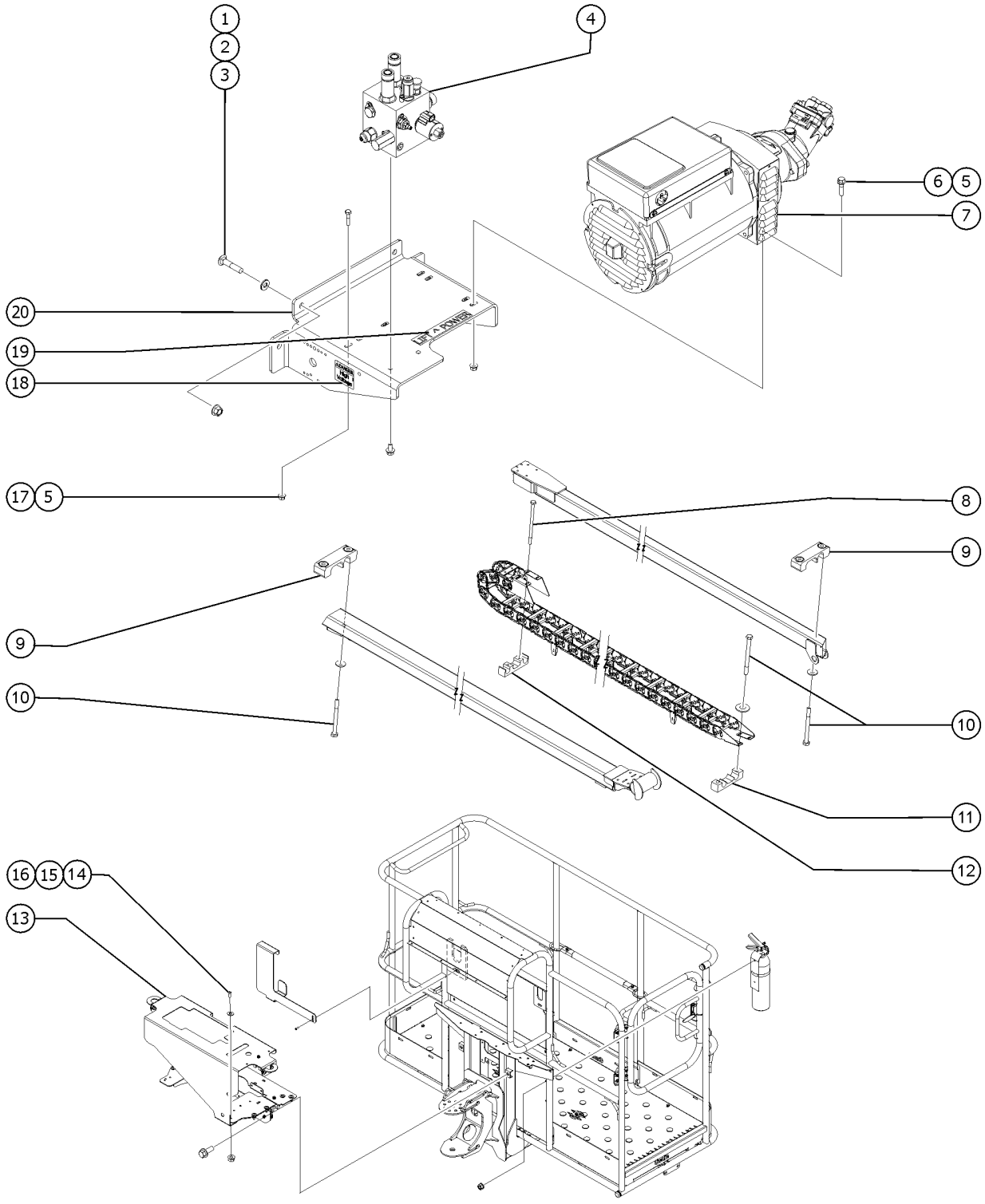

931.1 Lift power welder ready (from SN S60XCH-48880, SN S65XCH-48880)

Item	Part No.	Description	Qty.
1	1258670GT	BOLT,CARRIAGE,1/2-13X2.5,5,ZAG	4
2	1274172GT	NUT,NYLOCK FLG,1/2-13,G,ZAG	4
3	105634GT	WASHER,PUSH ON .75 SHAFT	4
4	1286459GT	ASSY, MANIFOLD, GEN OPTION	1
5	1274167GT	NUT,NYLOCK FLG,5/16-18,F,ZAG	3
6	824087GT	SCREW, HHF, 5/16-18 X 1.25, 8, ZAG	2
7	1285508GT	GENERATOR, HYD, 13KW 60HZ, 240V 3PH	1
8	1258395GT	SCREW,HHF,3/8-16X4,8,ZAG	2
9	1280838GT	CLAMP BLOCK, OPTIONS	2
10	1257867GT	SCREW,HHF,1/4-20X3.5,8,ZAG	6
11	228969GT	CLAMP, OPTION, CABLE TRACK	1
12	228796GT	CLAMP, OPTIONS, CABLE TRACK	1
13	1288456GT	ASSY, COMMON, LIFT POWER PLAT COMPONENTS	1
14	106860GT	SCREW,SECURITY,1/4-20 X 1.00LG	1
15	824113GT	WASHER,FLAT,USS,1/4,ZAG	1
16	1277924GT	NUT,NYLOCK FLG,1/4-20,F,ZAG	1
17	824066GT	SCREW,HHC,5/16-18X1.375,8,ZAG	1
18	82237GT	DECAL,DANGER,HIGH VOLTAGE	1
19	1283577GT	DECAL, LIFT^POWER, 1X7 INCH	1
20	1311053GT	BRACKET, GENERATOR 13 kW, S65XC	1

932.1 Quickfit Oil Change System Ready

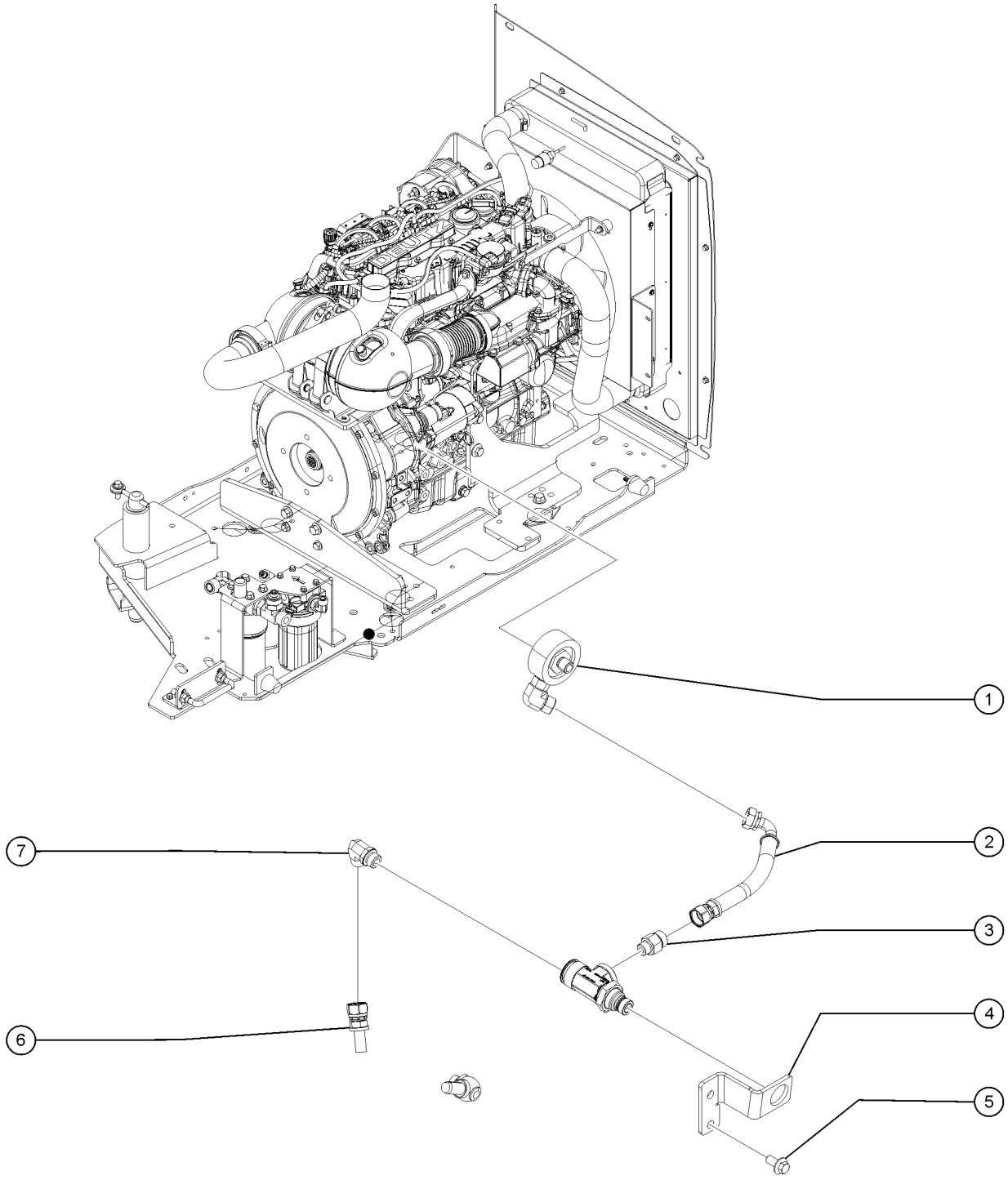

932.1 Quickfit Oil Change System Ready

Item	*Part No.*	*Description*	*Qty.*
1	1313118GT	RPM QUICKFIT KIT	1
2	1310911-950GT	ASSY, HOSE, OIL, -10, 300, STR, 90, 9.50 IN	1
3	56604GT	CONN,520120-10-8	1
4	1310898GT	BRACKET, QUICKFIT, OFFSET, 8 DOWN	1
5	231087GT	SCREW,HHF,M12-1.75X25,DIN6921,10.9,ZAB	2
6	1310910-975GT	ASSY, HOSE, OIL, -10, 300, STR, BANJO, 9.75 IN	1
7	48950GT	ELBOW,90D,520220-10	1

933.1 Access Manager Option

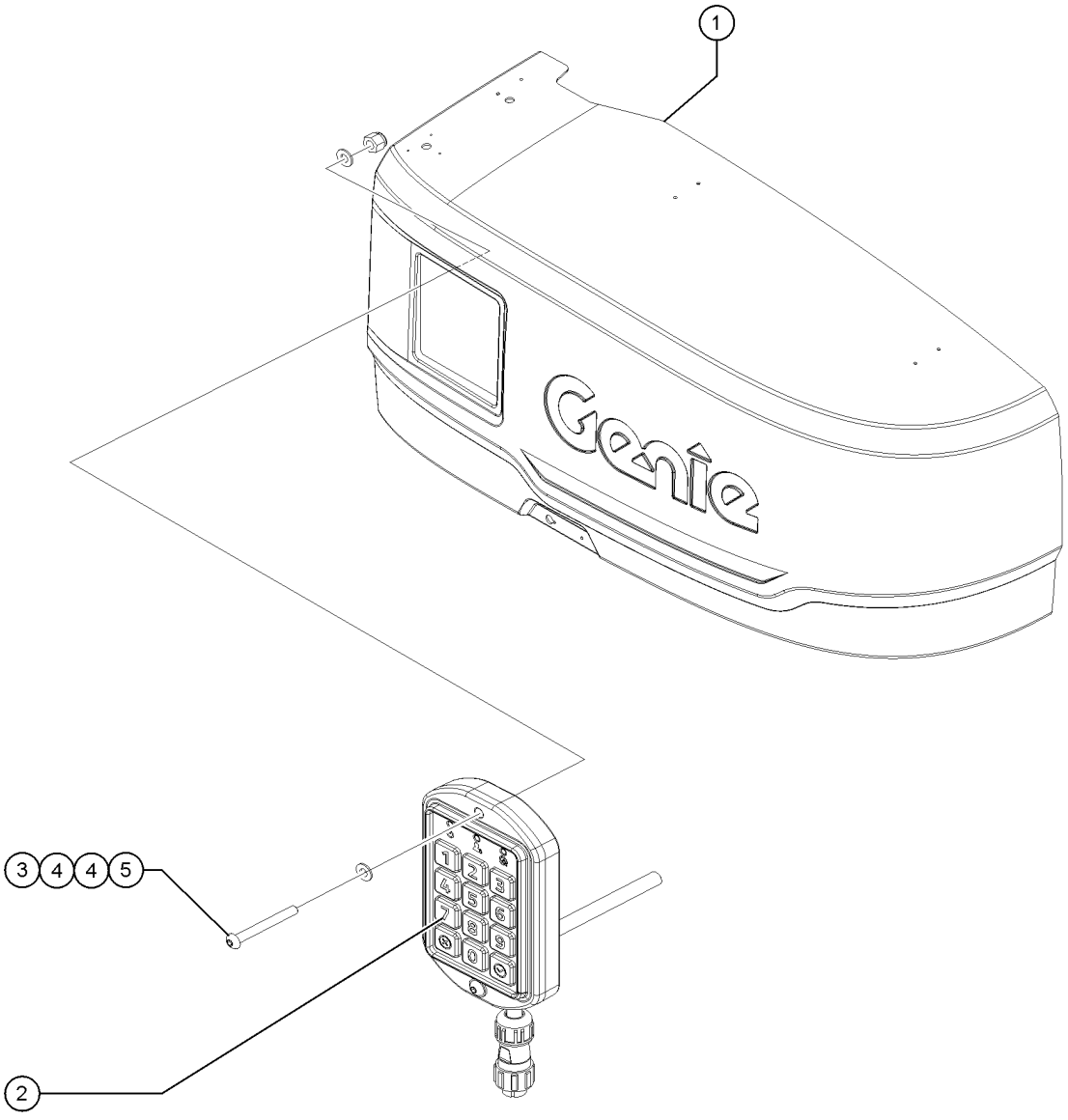

Item	*Part No.*	*Description*	*Qty.*
A	1296897GT	HARNESS, ACCESS MANAGEMENT, 164"	1
B	1273629GT	WIRE CLAMP, ADHESIVE, ADJUSTABLE, 7/16"	6
1		Ref. Cover, Tank Side (refer to 308.1)	
2	1296895GT	KEYPAD, ACCESS MANAGEMENT, LIFT CONNECT	1
3	1300832GT	SCREW, BHC, M4-0.7X35, 10.9,ZAB	2
4	825357GT	WASHER,FLAT,M4,DIN125,ZAB	4
5	1283019GT	NUT,NYLOCK,M4-0.7,DIN985,8,ZAB	2

Part no.	Page Number
1268GT	13
1484GT	13
1487GT	445
1488GT	445
1697GT	81
1702GT	281
5365GT	259
5397GT	265, 459
6037GT	459
6095GT	57
6146GT	287, 481
6178GT	287, 313, 329, 367, 459
6653GT	333, 347
6782GT	265
6833GT	95, 285, 309, 371, 409, 439...
6888GT	265
7056GT	467
7057GT	447
8149GT	87
8170GT	83
8177GT	57
8910GT	81
9599-SGT	431
10777GT	447
12344GT	459
12448GT	401
13000GT	459
13268GT	313, 329, 409, 463
13585GT	447
13597GT	259
13635-10GT	377
18396GT	381, 389
18665GT	461
18666GT	103, 407, 481
18720GT	361, 363
18722GT	363
19018-1100GT	435
19273GT	327
19274GT	133
19358GT	281
19491GT	105
20776GT	461
20973GT	119, 125, 127, 135, 139. 153...
21130GT	259, 287, 343
21465GT	283, 285, 309, 313, 315. 327...
21618GT	439, 443
22348GT	93
22571GT	355, 429
22672GT	301, 321, 333, 345, 453
22699GT	307
23405GT	453
24038GT	283, 301, 321, 333, 347
24514GT	401
25282GT	475
25548GT	307, 325
25817GT	51, 55, 57
25994GT	19
27067GT	55, 59, 67, 69
27082GT	353
27204GT	23, 39
27205GT	23, 39
27206GT	23, 39
27207GT	23, 39
27391GT	439, 443
27497GT	97
27581GT	13
27802GT	241
27807GT	241
27901GT	93
28131GT	119
28158GT	19, 35
28159GT	19, 35
28160GT	19, 35
28174GT	27, 31, 43, 49
28235GT	27, 31, 43, 49
28236GT	31
28301GT	113, 117
28646GT	83
28750GT	13, 245
29104GT	23
29261GT	439, 443
29557GT	295, 297, 317
29559GT	295
29560GT	15, 259, 295
29868GT	81, 91, 107, 327, 395, 429...
30144GT	81, 495
30220GT	385
30222GT	383
30348GT	301, 305
30468GT	455
30489GT	291, 325
30810GT	259, 287, 295
30971GT	263, 325, 337, 453, 481
30996GT	99
30997GT	101, 407
31060GT	19, 29, 31
31099GT	251, 255
31408GT	263
31523GT	259
31788GT	19
31983GT	309, 327
32064GT	275
32150GT	13
32151GT	13
32309GT	271
32698GT	15
33277GT	355
33428GT	385
33555GT	111, 115
33576GT	165
33674GT	445
33994GT	13, 245
33998GT	241
34162-300GT	305
34162-0400GT	457
34164GT	457
34344GT	357
34619GT	455
34922GT	453
34955GT	453, 457
34959GT	457
35434GT	301, 305, 323, 345, 349. 351...
35586GT	263
35675GT	359
35956GT	437
36208GT	283

Part no.	Page Number
36388GT	477, 493
36456GT	69, 281, 373
37187GT	87
37192GT	87
37947GT	113, 115
38149GT	19
38621GT	357
38922GT	353
39518GT	335
39540GT	99, 407
39908GT	187
40434GT	477
40766GT	407
42014GT	57, 59, 361
42079GT	395
42104GT	445
42781GT	407
42787GT	87, 419
43018GT	251, 253, 255
43392GT	403, 445, 455, 497, 501
43683GT	249
44981GT	27, 31, 43, 49
45074GT	55
45435GT	275, 305, 325, 337, 349. 457...
45454GT	309, 321
45455GT	305
45708GT	83, 495
46131GT	281, 313
46137GT	23
46139GT	19
46188GT	439
47025GT	475
47041GT	23
48425GT	357
48498GT	281
48731GT	23
48767GT	413, 415
48875GT	475
48878GT	81, 87, 419
48880GT	257, 413, 415, 423
48885GT	83, 421
48898GT	421
48904GT	419
48905GT	413, 415, 417, 421, 423
48907GT	413, 415
48908GT	423
48911GT	423
48912GT	81, 415, 417, 423, 427, 475
48915GT	419, 423, 469
48916GT	413, 415, 419, 423, 427
48918GT	423
48920GT	413, 415
48929GT	427, 469
48930GT	417, 423
48932GT	357, 419, 427
48933GT	413, 415, 423, 427
48936GT	357, 419, 423
48937GT	413, 415
48941GT	357, 419
48943GT	83, 419, 425
48946GT	419
48948GT	423
48950GT	507
48959GT	81, 419, 469
48960GT	419, 423, 469
48961GT	357, 419
48963GT	357, 419
48974GT	469
48975GT	419
48976GT	419
48977GT	419
48984GT	83, 419, 469
48996GT	83, 419
48997GT	257, 413, 415, 423
49000GT	97, 473
49116-2437GT	413
49116-2637GT	413
49117-2913GT	417
49117-4883GT	413
49117-6091GT	423
49117-6291GT	423
49117-7480GT	417
49117-8858GT	417
49117-10091GT	423
49117-10691GT	423
49117-13543GT	415
49119-2878GT	415
49119-4878GT	415
49119-6890GT	417
49119-7283GT	417
49119-7480GT	417
49119-7578GT	423
49120-7131GT	475
49128-3291GT	427
49128-6299GT	417
49128-12309GT	413, 415
49130-2482GT	423
49130-5118GT	423
49130-5591GT	427
49130-5782GT	417
49130-5906GT	417
49130-9843GT	469
49130-75787GT	413
49130-83858GT	415
49131-9603GT	423
49143-3429GT	417
49143-3629GT	417
49143-12329GT	413, 415
49150-2756GT	417
49150-7283GT	417
49163-7144GT	475
49176-8638GT	83, 417
49177-96542GT	447
49183-13492GT	413, 415
49212GT	447
49214GT	447
49215GT	447
49219GT	413, 415
49364GT	355
49379GT	429
49408GT	271, 429
49519GT	87, 419
49612GT	13, 245
49613GT	245
49816GT	287
49817GT	289

Part no.	Page Number
49915GT	295
49924GT	15, 17, 259, 295, 297, 317
50787GT	287
51063GT	369
51131GT	75
52352GT	295
52475GT	23, 39
52692GT	23, 39
52715GT	241
52865GT	19
52866GT	265, 291, 305, 325, 339, 349
52943GT	251, 255
52967GT	23, 39
53386GT	57, 91
53952GT	263, 275, 307, 339, 349
53980GT	427
54065GT	381, 389
54124GT	93
54205GT	343, 353
54254GT	155
54255GT	129, 133, 155, 187
54324GT	93
54365GT	459
54428GT	259, 303, 321
54437GT	343
54486GT	455
54487GT	333
54578GT	333, 345
54579GT	333
55753GT	403, 431, 435, 439, 443, 497...
56424GT	401, 431, 433, 435
56426-700GT	439, 443
56445GT	133, 157
56525GT	435
56570GT	435
56604GT	507
56687GT	137, 235
56704GT	429
56912GT	51, 59, 83, 87, 89, 111...
56934GT	435
58249GT	295
58304GT	107
58380GT	357
58415GT	263, 305, 349
58489GT	87
58566GT	295
58630GT	15, 295
58632GT	271
59371GT	81
59460GT	51
60304GT	367, 369, 373
60334GT	357
60425GT	135, 139, 143, 145, 149, 153...
60426GT	153
60427GT	153, 185, 489
60428GT	233
60429GT	155, 163, 187, 191, 233
60433GT	125, 127
60435GT	129, 131, 133, 137, 141, 151...
60439GT	133, 137, 143, 145, 149, 155...
60441GT	137, 139, 143, 145, 149, 237...
60443GT	105, 143, 191
60447GT	129, 133, 157
60452GT	135, 139, 145, 187, 235
60459GT	133, 139, 145, 187, 235
60521GT	221
60526GT	129, 133, 157
60527GT	125, 127, 131, 133, 141, 143...
60528GT	125, 127, 131, 133, 141, 143...
60531GT	139
60532GT	139
60585GT	335, 347
60840GT	367, 373
60857GT	13, 357
60984GT	361
61073-2697GT	469
61073-3012GT	469
61073-3730GT	417
61074-5710GT	469
61074-7254GT	417
61074-9646GT	469
61189GT	117
61263GT	83, 419, 469
61602GT	381, 389
61610GT	469
62127GT	257
62337GT	257
62392GT	411
62414GT	87
62420GT	13, 15, 263, 305, 339, 349
62421GT	15, 335
62425GT	15, 17, 291, 325
62433GT	13, 15, 343, 353
62506GT	251, 255
62507GT	251, 255
63375GT	459
63463GT	263, 305, 337, 349
63468GT	63
63727GT	453
65278GT	23, 39
65473GT	345
65630GT	435
65636GT	335, 347
65638GT	335, 347
65810GT	265, 305, 339, 349
65887GT	95, 97
66399GT	13
66472GT	439, 443
66811GT	99
66812GT	99, 405
66813GT	99, 405
66815GT	405
66816GT	99
66817GT	99, 405
66818GT	99
66821GT	99
67504GT	221
67897GT	403
69775GT	259, 303, 321
70317GT	451
70318GT	451
70319GT	451
70351PGT	263
70367GT	285, 343, 345
70375GT	263
70376GT	263

Part no.	Page Number
70381GT	261, 291, 307, 325
70385GT	259, 337
70444GT	287
70445GT	287
70448GT	289
70449GT	287
70452GT	261, 263, 277, 283, 315, 341...
70454GT	293
70455GT	293
70460GT	263
70461GT	263
70483GT	289
70529GT	457
71259GT	87, 471
71768GT	369
71909GT	95, 97
71911GT	287, 323
72086GT	19, 23, 27, 35, 39, 43
72168GT	19
72169GT	19
72282GT	429
72290GT	55, 59
72326GT	99
72327GT	285
72343GT	275
72348GT	333
72875GT	31, 435
72999GT	19
73463-1175GT	435
73478GT	401
73575	479
73575GT	401
73713GT	105
73717GT	101, 129, 133, 157, 407
73725GT	105, 191
73730GT	101, 129, 133
73736GT	101, 129, 133
73814GT	175, 365
73900GT	399
74006GT	447, 459, 467
74052GT	447
74735GT	57
74902GT	241, 243, 251, 255
74913GT	467
75020GT	353
75064GT	361
75185GT	429
75278-5029GT	423
75278-5129GT	423
75443GT	411
75444GT	411
75445GT	411
75446GT	411
75447GT	411
75448GT	411
75449GT	411
75450GT	291, 325
75451GT	291, 325
75462GT	257
75617-1025GT	439, 443
75617-1550GT	439, 443
75617-2075GT	441, 445
75617-2275GT	439, 443
75617-3138GT	441
75629GT	137, 139, 143, 145, 149
75631GT	271
75636GT	439, 443
75640GT	153, 155, 163, 225, 237
75654GT	83, 419, 469
75854GT	87, 471
75855GT	87, 471
76695GT	383
77051GT	371, 377
77103-3600GT	365
77103-4000GT	381
77295GT	17, 275
77310-1575GT	413, 415
77310-1693GT	413, 415
77402GT	343
77477GT	333, 345
77482GT	345
77483GT	355
77610GT	57
77616GT	367
77618GT	367
77644GT	495
77648GT	377
77649GT	377
77653GT	371
77654PGT	371
77656GT	367, 377
77664GT	435
77671GT	107
77674GT	63, 67, 69
77683GT	435
77688GT	367
77693GT	87
77713GT	369
77736GT	333
77778GT	111, 117
77790GT	57
77791GT	57
77795GT	371
77797GT	439, 443
77879GT	107
77880GT	57
77882GT	369
77884GT	373
77891GT	457
77950GT	59
77990GT	333
77996GT	451
77997GT	451
77998GT	451
78736GT	297, 317, 485
79015GT	221
80543GT	459, 467
81167GT	451
81175GT	383
81340GT	397
81341GT	395
81342GT	395
81347GT	395
81368GT	435
81467GT	291, 325
81468GT	291, 325

Part no.	Page Number
81488GT	407
81522GT	357
81578GT	83, 123
81609GT	65
81610GT	65
81691GT	65
81724GT	359
81802GT	441, 445
81812-13292GT	423
81834GT	107
81856GT	369
82161GT	19
82237GT	27, 31, 505
82240GT	37
82366GT	19
82410GT	31, 435
82481GT	35
82487GT	35, 49
82862GT	31
83093GT	113, 115
83098GT	411
83141GT	249
85300GT	435
87033GT	357, 421
87755GT	101, 129, 133, 157, 407
88280GT	383
88331GT	129, 133, 157
88332GT	129, 133, 157, 159, 233
88356-11103GT	175, 365
88356-13103GT	105, 173
88356-13107GT	179, 367
88356-32163GT	177, 369
88377-1400GT	435
88390GT	439, 443
88406GT	465
88451GT	267
88452GT	267
88493GT	457
88516GT	383, 389
88567GT	377
88568GT	377
88606GT	455
88607GT	455
88676GT	361
88756GT	143
88793GT	377
88795GT	369
88796GT	377
88801GT	121, 209
88804GT	123, 231
88831GT	123, 227
88841GT	337
88846GT	337
88847GT	337
88872GT	361
88884GT	55, 59, 67, 69
88887GT	53, 61
88917GT	15, 17
88919GT	363
88936GT	469
88942-4331GT	417
88942-8354GT	417
88942-10827GT	417
88949-3828GT	417, 469
88988GT	341, 353
88989GT	335
88990GT	335, 345
88991GT	337
88992GT	337
88993GT	337
89294GT	51
89295GT	55
89312GT	241
89733GT	239, 241
89737GT	241
89765GT	15
89770GT	241
89771GT	341
89774GT	263
89785GT	299, 319
89871-6421GT	417
89953GT	343
89997GT	289
89998GT	289
93500GT	13
94221GT	51
94333GT	57, 63
94374-2430GT	423
94374-6421GT	417
94464-4986GT	423
94465-3650GT	417
94465-5566GT	427
94466-2336GT	423
94599GT	241
94643GT	83, 421
94652GT	129, 133, 135, 233, 235
94762GT	15, 333, 347
94937GT	105
94981GT	485
94982GT	461
97128GT	105, 367, 369
97232GT	369
97469GT	257
97548GT	27
97579GT	31
97602GT	27
97815GT	31, 49
97865GT	19
99087GT	137, 153, 221, 237
99343GT	157, 163
99344GT	157, 163
99778GT	489
101006GT	265
101140GT	259
101191GT	135, 139, 235
101199-200GT	489, 491
101293GT	87, 419
101490GT	83, 419
101491GT	83, 419, 469
101494GT	83, 419, 469
101525GT	463
101639GT	457
101640GT	481
101681GT	219
101726GT	93
101932GT	385, 449

Part no.	Page Number
101964GT	115
102045GT	293, 329
102074GT	281
102119GT	281
102121GT	279, 345
102126GT	53, 61
102131GT	53, 61, 67, 69
102155GT	55, 59
102157GT	67, 69
102158GT	53, 55, 59, 61, 67, 69
102159GT	55, 59
102162GT	53, 61, 67, 69
102163GT	53, 61
102166GT	67, 69
102167GT	53, 61, 67, 69
102209GT	291
102227GT	291
102237PGT	289
102516GT	53, 61, 67, 69
102528GT	241
102586GT	295
102587GT	295, 297, 317
102590GT	295
102785GT	455
102786PGT	455
102940GT	239
104804GT	403
105214GT	393
105634GT	505
106003GT	333
106033GT	259, 287, 295
106034GT	259, 287, 295
106042GT	361, 363
106073GT	459
106079GT	251, 255
106098GT	55, 59, 67, 69
106099GT	453
106104GT	461
106115GT	121
106117GT	53, 55, 59, 61, 75, 77
106118GT	75, 77
106141GT	465
106172GT	259, 333
106204GT	465
106211-300GT	483
106226GT	285, 343, 347
106275GT	463
106495GT	461
106516GT	51
106554GT	123, 229
106555GT	123, 223
106647GT	57, 63
106648GT	57, 63
106780GT	129, 133, 157
106860GT	465, 505
107578GT	57
108538GT	297, 317
108855GT	389
110149GT	261, 345, 385, 391
110183GT	287
110196GT	243
110197GT	241
110221GT	51
110276-2400GT	463
110276-2800GT	463
110276-3600GT	463
110276-4100GT	463
110276-4900GT	463
110276-5600GT	463
110304GT	333, 345
110339GT	367
110340GT	377
110406GT	283
110417GT	283
110477GT	281
110650GT	369
110654GT	157
110899GT	337
111029GT	337
111155GT	71
111445GT	295
111526GT	455
111580GT	497, 501
111634GT	275
111778GT	239, 241
111818GT	95
111819GT	95, 97
114249GT	39
114251GT	35, 43
114252GT	35, 45, 49
114258GT	19, 27
114390GT	19, 27, 31
114416GT	31
114425GT	19
114473GT	49
115048GT	257
119051GT	279
119052GT	277
119053GT	347
119055GT	95
119056GT	135, 139, 143, 145, 149, 153...
119057GT	135, 139, 145, 185, 187, 235...
119058GT	155, 163, 187, 191
119060GT	125, 127
119061GT	101, 129, 133, 137, 141, 143...
119062GT	129, 133, 137, 141, 143, 147...
119063GT	131, 133, 153
119064GT	129, 133, 153, 157
119065GT	135, 145, 149, 155, 165, 169...
119066GT	235, 489
119067GT	105, 143, 191
119070GT	187
119085GT	449
119086GT	449
119088GT	449
119089GT	449
119115GT	241
119116GT	239
119139GT	17, 269
119168GT	97
119170GT	95
119219GT	259
119232GT	281
119394GT	309
119403GT	491
119474GT	17, 271

Part no.	Page Number
119475GT	267
119477GT	271
119568GT	267
119619GT	51
119644GT	101
119761GT	177
119824GT	281
119915GT	411
119918GT	95
119965GT	267
120234GT	259
120258GT	263
120259GT	263
121065GT	397
121489GT	429
121582GT	403
121615GT	289
121619GT	121, 215
121622GT	121, 213
121657GT	145
122019GT	429
122073GT	431, 439, 443
122120GT	239, 251, 255
122121GT	251, 255
122148GT	251, 255
122641GT	243
122645GT	239
122647GT	239
122649GT	239
122657GT	241
122661GT	397
122662GT	397
122663GT	397
122668GT	397
125865GT	51
128000GT	411
128001GT	411
128003GT	341
128004GT	259, 291, 307, 325
128022GT	341
128049GT	59
128079GT	481
128165GT	267
128166GT	267, 269
128200GT	405
128201GT	101
128203GT	101, 119, 161, 405, 439, 443
128204GT	405
128268GT	385
128322GT	463
128483GT	383
128584-SGT	405
128588GT	343
128829GT	287
128896GT	287
128909GT	73
128910GT	71
128911GT	73
128912GT	71
128913GT	71
128914GT	71
128916GT	73
128917GT	73
128918GT	73
128919GT	73
128920GT	73
128921GT	73
128922GT	71
128923GT	71
128924GT	73
128925GT	71
128927GT	73
128928GT	71
128949GT	71
128955GT	73
128984GT	333, 347
128985GT	333, 347
128991GT	333, 345
133067GT	35, 43, 49
133205GT	35
133238GT	27
133250GT	23
133253GT	29, 45
133254GT	29, 45
133259GT	23, 39
133260GT	23, 39
133263GT	39
133278GT	19
139000GT	67
139001GT	67
139002GT	67, 69
139140GT	67, 69
139288GT	377
139308GT	107
139309GT	107
139321GT	289
139322GT	287
139323GT	107
139338GT	405
139384GT	377
139385GT	377
139455GT	291
139508GT	245
139512GT	245
139515GT	245
139527GT	245
139528GT	245
139598GT	411
139610GT	279
139715GT	247
139716GT	245
139717GT	245
139718GT	245
139719GT	245, 247
139726GT	247
139727GT	245, 247
139731GT	123, 217
139799GT	249
139965GT	51, 59
139966GT	51, 53, 59, 61
139967GT	51, 53, 59, 61
139968GT	53, 61
139969GT	53, 61
139970GT	53, 61
139971GT	53, 55, 61, 63
139972GT	53, 55, 61, 63

Part no.	Page Number
146180GT	87
146181GT	87
146182GT	87
146376GT	95
146413GT	95
146417GT	95
146478GT	405
147033GT	53, 55, 61, 63
147034GT	53, 55, 61, 63
147121GT	401
147355GT	333, 345
147550GT	249
147792GT	23
147826GT	343
150103GT	135, 139, 237
160517GT	293
160540GT	279
160541GT	277
160687GT	259
160809GT	399
161087GT	261
161533GT	241
161607GT	107
161611GT	341, 353
161938GT	309, 327
162206GT	315, 331
162207GT	313, 329
162208GT	315, 331
162209GT	313, 329
162216GT	63
162217GT	63
162283GT	321
162284GT	321
214225GT	383
214226GT	383
214228GT	15, 17, 313, 329
214237GT	303
214249GT	489
214446GT	277
214536GT	489
214620GT	463
214621GT	463
214622GT	463
214623GT	463
214682GT	311
214685GT	301
214686GT	305
214795GT	87
214934GT	311
215254GT	113, 115
215269GT	271
215270GT	271
215271GT	271
215273GT	271
215274GT	17, 271
215275GT	269
215276GT	273
215277GT	273
215278GT	269
215279GT	271
215280GT	267
215281GT	267
215282GT	267
215283GT	267
215284GT	267, 281
215285GT	267, 281
215287GT	17, 267
215288GT	271
215289GT	271
215290GT	271
215291GT	271
215294GT	267
215295GT	267
215298GT	271
215299GT	267
215300GT	269
215301GT	269
215302GT	269
215305GT	269
215307GT	271
215308GT	269
215309GT	269
215310GT	269
215311GT	271
215313GT	271
215314GT	267
215320GT	275
215323GT	281
215340GT	53, 61, 67, 69
215421GT	281
215472GT	349
215526GT	27, 43
215527GT	27
215528GT	279
215642GT	53, 61, 67, 69
215776GT	277
215912GT	349
215917GT	345
216167GT	277, 283
216367GT	275
216372GT	149
216388GT	149
216583GT	45
216606GT	491
216607GT	491
216611GT	489
216612GT	489
216615GT	489
216616GT	489
216617GT	491
216618GT	491
216655GT	489
216662GT	489
216676GT	491
216683GT	489
217366GT	463
217820GT	267
217822GT	273
217823GT	269
217824GT	271
217877GT	305
217930GT	305
218003GT	47
218165GT	405
218448GT	397
218449GT	99

Part no.	Page Number
218457GT	407
218458GT	467
218559GT	31
218576GT	275
218668GT	277
218715GT	309, 327
219437GT	301, 311, 321
219487GT	31
219508GT	481
219956GT	49
219958GT	49
219976GT	305
220229GT	285
220230GT	267, 285
220231GT	267
226388GT	157
226389GT	163
226390GT	163
226393GT	429
226542GT	383, 389
226947GT	163
226948GT	157, 407
227309GT	273
227564GT	165
227618GT	119, 165, 401
227785GT	63
227988GT	275
228792GT	45
228796GT	395, 505
228797GT	395
228848GT	435
228849GT	435
228969GT	397, 505
229110GT	135, 139, 143, 145, 149, 235
229169GT	397
229201GT	97
229202GT	95
229203GT	97
229567GT	405, 407
229817GT	67, 69
229818GT	67, 69
229931GT	67, 69
230820GT	347
230849GT	53, 61
231034GT	239
231087GT	349, 507
231510GT	79
231513GT	117, 281, 337
231529GT	341, 343
231530GT	249
231532GT	113, 115
231612GT	53, 61
231868GT	467
232874GT	277, 281
233108GT	475
233509GT	385
233992GT	435
235659GT	275
236248GT	299, 319
236251GT	299, 309, 319
236259GT	17, 313, 329
236260GT	15, 17, 313, 329
236338GT	283
236339GT	283
236340GT	281
236364GT	285
236373GT	273, 277
236420GT	283
236421GT	281
236422GT	277
236423GT	281
236425GT	281
236799GT	267, 275, 281
236911GT	95
236912GT	95
237068GT	495
237146GT	275
237188GT	305
237189GT	313
237190GT	313
237191GT	313
237192GT	301
237193GT	301
237194GT	301
237234GT	239
237238GT	259, 287, 301, 321
237241GT	385, 391
237242GT	385, 391
237352GT	327
237385GT	275
237711GT	489
237730GT	325
237780GT	281
237830GT	63
237832GT	281, 347
238135GT	111, 117, 381
238330GT	387
238359GT	285
822131GT	27
822224GT	407
822250GT	129, 133, 157, 233
822436GT	137, 235
822437GT	235
822438GT	135, 235
822439GT	135, 235
822440GT	235
822442GT	137, 235
822445GT	137, 235
822448GT	135, 235
822462GT	135, 139, 143, 145, 149, 237
822463GT	137, 141, 143, 145, 149, 237
822464GT	133, 139, 143, 145, 149, 235
822465GT	137, 139, 143, 145, 149, 235
822466GT	135, 137, 139, 141, 143, 145...
822467GT	137, 139, 143, 147, 151, 237
822468GT	133, 141, 143, 145, 151, 237
822469GT	133, 137, 141, 143, 145, 147...
822514GT	287
822515GT	337
822606GT	309, 327
822692GT	85
822693GT	259
822694GT	301
822695GT	283, 301, 345
822696GT	301
822697GT	345

Part no.	Page Number
822698GT	283
822759GT	439, 443
822768GT	439, 443
822769GT	439, 443
822771GT	443
822780GT	137, 139, 141
822817GT	457
822871GT	457
823052GT	149
823053GT	149
823074GT	89
823113GT	23, 39
823356GT	93
823368GT	87, 121, 199
823520GT	429
823523GT	309
823751GT	325
823816GT	273
824025GT	279, 287
824027GT	97, 113, 115, 259, 275, 283...
824028GT	111, 115, 267, 275, 285, 307...
824029GT	93, 93, 111, 115, 275, 283...
824031GT	85
824032GT	485, 489
824038GT	277, 435
824041GT	65, 259, 287, 343
824059GT	51, 59, 113, 115, 461
824060GT	457
824062GT	369
824063GT	63, 475
824065GT	385
824066GT	461, 467, 505
824067GT	51, 367, 373
824068GT	367, 373, 389
824072GT	55, 59
824075GT	383, 389
824077GT	375, 379, 465
824078	479
824078GT	81, 87, 89, 95, 111, 117...
824079GT	87, 105, 315, 331, 335, 343...
824080GT	87, 97, 343, 351, 383, 481
824081GT	87, 283, 383, 389, 437
824082GT	365, 401
824083GT	87, 371, 395, 435
824084GT	397, 485
824085GT	267, 277, 285, 375, 437
824086GT	285, 291, 307, 337, 351, 375...
824087GT	279, 353, 373, 459, 467, 505
824089GT	91, 107, 287, 359, 361, 369...
824090GT	81, 89, 97, 107, 261, 263...
824091GT	51, 85, 81, 95, 291, 313...
824092GT	105, 283, 309, 381
824093GT	365, 383
824095GT	51
824096GT	395
824110GT	51, 367
824113GT	51, 59, 287, 369, 381, 385...
824115GT	357
824116GT	383, 389
824120GT	283, 303, 321, 333, 347
824123GT	293, 329
824124GT	305, 449
824127GT	51, 367
824129GT	51, 367
824132GT	323, 335, 347
824133GT	309
824134GT	281
824135GT	79
824136GT	85
824142GT	261, 291, 325
824144GT	79, 83, 337, 343
824145GT	279, 289, 341, 343
824149GT	437
824151GT	293
824207GT	445
824214GT	101, 407
824215GT	93, 313, 329, 455
824216GT	105, 367
824220GT	275, 285, 301, 305, 321, 333...
824225GT	401
824226GT	101
824227GT	443, 457
824471GT	93
824600GT	309, 327
824615GT	27
824617GT	459
824673GT	299, 317
824849GT	121
825019GT	51, 359, 381, 389
825348GT	77
825349GT	455
825351GT	261, 291
825352GT	429, 485
825353GT	107, 277, 287, 377, 383, 389
825354GT	83
825355GT	259, 337
825357GT	509
825358GT	69, 369, 463
825708GT	297, 317
825737GT	459
825796GT	51, 369, 377, 381, 389
825939GT	297, 317
826008GT	307, 325
826171GT	107, 277
826214GT	337, 467
826215GT	337, 467
826345GT	19
826379GT	371, 377
826516GT	375, 489
826793GT	367, 373
826795GT	321
826822GT	321
1251496GT	327
1251500GT	89
1251501GT	89
1251502GT	89
1251503GT	89
1251504GT	89
1251505GT	89
1251506GT	89
1251565GT	329, 369, 377, 381, 389, 395
1251600	479
1251600GT	401, 435, 447, 497, 501
1251731GT	311
1251757GT	93, 453, 481
1251814GT	355

Part no.	Page Number
1251819GT	345
1251899GT	261, 289, 293
1251983GT	277, 281, 303, 309, 323, 327...
1251994GT	263, 277, 313, 341, 353
1251997GT	277, 341, 477, 493
1252050GT	275
1252052GT	275
1252940GT	345
1252942GT	345
1252943GT	355
1252978GT	377
1253011GT	27
1253185	479
1253185GT	101, 285, 301, 305, 321. 333...
1253250GT	163
1253251GT	207
1253264GT	115
1253271GT	115
1253477GT	89, 101, 407
1253478GT	57, 65, 93, 111, 115, 381...
1253485GT	97, 463, 497, 501
1253487GT	349
1253489GT	447, 467
1253498GT	57, 59, 83, 249, 277, 307...
1253629GT	19
1253749GT	273
1253795GT	107
1253796GT	107
1253815GT	361, 365
1253819GT	111
1253825GT	83
1253830GT	111, 117
1253831GT	111, 117
1253922GT	309
1253990GT	349
1254017GT	349
1254267GT	309
1254452GT	309
1254453GT	309
1254594GT	297, 317
1254625GT	113, 117
1254639GT	361
1254823GT	309, 327
1254826GT	295
1255385GT	55, 63, 75
1255391GT	395
1255396GT	315, 331
1255399GT	315, 331
1255400GT	315, 331
1255451GT	327
1255452GT	51
1255469GT	261, 277
1255581GT	19, 27, 35, 43
1255582GT	19, 35
1255642GT	69
1255643GT	93
1255653GT	295, 297
1255666GT	261, 277, 291, 307, 325
1255692GT	309
1255699GT	57
1255700GT	55
1255702GT	63, 65
1255703GT	51, 59
1255704GT	57
1255705GT	51
1255706GT	51
1255708GT	55
1255710GT	55
1255711GT	59
1255714GT	69
1255720GT	105
1255722GT	105
1255726GT	475
1255727GT	475
1255728GT	475
1255730GT	473
1255731GT	473
1255753GT	405
1255756GT	381
1255758GT	287, 381, 395, 439, 443
1255760GT	261, 263, 277, 283, 313. 341...
1255761GT	377
1255763GT	113, 117, 325, 481
1255768GT	105
1255769GT	105
1255770GT	105
1255771GT	105
1255772GT	107
1255773GT	107
1255782GT	377
1255788GT	447
1255802GT	59, 65
1255805GT	91, 107, 113, 117, 263, 291...
1255894GT	305
1255986GT	111
1255987GT	115
1256054GT	113, 115
1256107GT	361
1256110GT	385
1256119GT	367
1256124GT	463
1256126GT	357
1256127GT	111, 117, 381, 383
1256165GT	327
1256168GT	107
1256169GT	293, 329
1256170GT	63, 105
1256177GT	365
1256180GT	383
1256182GT	55, 63, 75, 105
1256267GT	57, 59, 361
1256283GT	261, 263, 277, 283, 313. 327...
1256312GT	453
1256377GT	477
1256378GT	477
1256379GT	477
1256380GT	477
1256389GT	477
1256400FRGT	477
1256400GT	477
1256425GT	43, 49
1256439GT	477
1256455GT	343
1256464GT	275, 369
1256469GT	85
1256481GT	477, 493

Part no.	Page Number
1256482GT	329
1256599GT	311
1256679GT	111, 117, 301, 311
1256693GT	111, 115
1256767GT	111
1256771GT	115
1256776GT	263, 293, 313, 329
1256804GT	455
1256837GT	107
1256842GT	107
1256843GT	383, 389
1256846GT	107
1256848GT	279
1256851GT	477, 493
1256855	83, 99, 111, 435, 497, 501
1256855GT	113, 259, 275, 283, 353, 359...
1256856GT	111, 113, 451, 477, 493
1256863GT	107
1256864GT	361
1257076GT	65, 259, 287
1257078GT	55, 59
1257080GT	361
1257223GT	107
1257227GT	407, 455, 459
1257231GT	311
1257296GT	447, 467
1257390GT	101, 447, 467
1257410GT	99
1257419GT	65
1257421GT	307, 325
1257424GT	283, 301
1257450GT	275
1257453GT	63
1257464GT	393
1257481GT	277
1257486GT	283
1257489GT	277
1257628GT	111, 115, 281
1257685GT	345
1257705GT	341, 353
1257706GT	289, 343
1257707GT	341
1257733GT	13
1257736GT	349
1257737GT	349
1257776GT	341
1257810GT	341, 353
1257834GT	337
1257836GT	333
1257837GT	261
1257866GT	365
1257867GT	395, 397, 505
1257868GT	475
1257869GT	475
1257961GT	313, 329
1258096GT	149
1258100GT	129, 133, 233
1258174GT	19, 27, 35, 43
1258175GT	19, 35
1258176GT	19, 27, 35, 43
1258177GT	19, 35
1258395GT	395, 505
1258567GT	13
1258641GT	327
1258670GT	459, 467, 505
1258722GT	113, 117
1258723GT	111, 115
1258724GT	111, 115
1258771GT	281, 327
1258824GT	343
1258892GT	377
1258949GT	21, 35
1258950GT	21, 35
1258952GT	409
1258955GT	25
1259001GT	107
1259002GT	91, 107
1259106GT	393
1259329GT	441, 445
1259338GT	89
1259339GT	89
1259441GT	309, 327
1259583GT	455
1259584GT	455
1259586GT	275
1259654GT	297, 317
1259660GT	299, 319
1259663GT	285
1259855GT	81, 357
1259899GT	297, 317
1260082GT	55, 63
1260084GT	53, 61
1260162GT	113
1260163GT	117
1260174GT	357
1260357GT	297, 317
1260892GT	477, 493
1260910GT	477
1261001GT	455
1261018GT	477
1261019GT	477
1261020GT	477
1261021GT	477
1261022GT	477
1261023GT	477
1261024GT	477
1261025GT	477
1261184	479
1261236GT	313, 329
1261239GT	313, 329
1261240GT	313, 329
1261241GT	313, 329
1261244GT	113
1261245GT	115
1261250GT	497, 501
1261266GT	113, 117
1261277GT	81, 91, 107, 113, 117, 321...
1261724GT	81, 357
1261795GT	467
1261815GT	221
1261835GT	115
1261836GT	111, 115
1261837GT	113, 117
1261898GT	135
1261920GT	329
1261921GT	321

Part no.	Page Number
1261925GT	327
1261926GT	327
1261928GT	327
1262031GT	487
1262210GT	113
1262211GT	115
1262324GT	301
1262342GT	31
1262359GT	457
1262484GT	333
1262487GT	15, 17
1262585GT	337
1262678GT	485
1262688GT	361
1262828GT	325
1262829GT	325
1262831GT	321
1262832GT	329
1262833GT	329
1262838GT	321
1262839GT	321
1262841GT	321
1262842GT	305, 321
1262846GT	457
1262866GT	17, 299, 319
1262867GT	17, 299, 319
1262868GT	297, 317
1262870GT	297, 317
1262871GT	297, 317
1262872GT	297, 317
1262873GT	299, 319
1262874GT	317
1262875GT	297, 317
1262876GT	299, 319
1262877GT	299, 319
1262878GT	299, 319
1262881GT	297, 317
1262883GT	297, 317
1262893GT	299, 317
1262894GT	297, 299, 317
1262895GT	297, 317
1262896GT	297, 317
1262897GT	297, 317
1262899GT	299, 319
1263237GT	79
1263542GT	35, 43
1263543GT	21, 27
1264229GT	481
1264261GT	105
1264262GT	275
1264348GT	301
1264483GT	81
1264497GT	481
1264498GT	481
1264499GT	481
1264894GT	269
1264934	479
1264969GT	87
1265019GT	385
1265397GT	403
1265738GT	301
1265862GT	157, 407
1265999GT	111
1266019GT	21
1266159GT	457
1267121GT	21, 27
1267235GT	259
1267237GT	259
1267238GT	261
1267239GT	261
1267746GT	401
1267747GT	403
1267807GT	357
1268010GT	321
1268161GT	163
1268166GT	207
1268229GT	357
1268267GT	55, 59
1268274GT	77
1268322GT	101
1268327GT	101
1268505GT	365
1268651GT	101
1268832GT	85
1269051GT	121, 201
1269060GT	123, 219
1269061GT	121, 189
1269086GT	467
1269367GT	385
1269424GT	383
1269497GT	407
1269498GT	405
1269499GT	411
1269546GT	485
1269641GT	401
1269642GT	381
1269704GT	137, 139, 143, 145, 149
1269714GT	121, 177
1269717GT	121, 179
1269720GT	119, 167
1269721GT	119, 439, 443
1269724GT	121, 181
1269729GT	121, 185
1269732GT	119, 161
1269734GT	121, 203
1269735GT	119
1269738GT	87, 121, 191, 197
1270131GT	485
1270141GT	261
1270151GT	109
1270278GT	121, 193, 393
1270309GT	485
1270310GT	485
1270313GT	433
1270314GT	433
1270316GT	433
1270337GT	393
1270570GT	431
1270571GT	431
1270665GT	461, 497, 501
1270810GT	251, 255
1270946GT	249
1270969GT	21, 35
1270970GT	21, 35
1270994GT	433
1271018GT	433

Part no.	Page Number
1271019GT	433
1271040GT	433
1271056GT	277
1271058GT	275
1271061GT	433
1271077GT	431
1271078GT	431
1271081GT	101
1271652GT	17, 97
1271713GT	411
1271770GT	93
1271771GT	95
1271772GT	93
1271773GT	93
1272122GT	101, 129, 133, 157, 407
1272123GT	101, 133, 157, 407
1272242GT	21, 35
1272303GT	399
1272304GT	399
1272326GT	487
1272433GT	467
1272624GT	297
1272965GT	305
1272967GT	305
1273081GT	305
1273342GT	113
1273343GT	111
1273344GT	117
1273345GT	117
1273414GT	361
1273563GT	401
1273564GT	401
1273629GT	509
1273674GT	373
1273706GT	381, 389
1273734GT	383, 393, 401
1273918GT	325
1273919GT	323
1274164GT	101, 407
1274165GT	381, 383, 401
1274166GT	381, 439, 443
1274167GT	83, 113, 117, 373, 459, 463...
1274168GT	101, 407
1274170GT	461
1274172GT	107, 261, 263, 277, 283, 313...
1274315GT	377
1274320GT	287, 377
1274322	479
1274322GT	51, 65, 81, 105, 111, 261...
1274331GT	93
1274336GT	249
1274511GT	381
1274613GT	53, 61
1274645GT	439, 443
1274859GT	399
1274870GT	239
1274900GT	309
1275087GT	447
1275088GT	401
1275089GT	401
1275169GT	389
1275248GT	411
1275258GT	411
1275259GT	411
1275625GT	365
1275778GT	119, 171, 365, 385, 391
1275937GT	99
1276017GT	367, 373
1276018GT	367, 373
1276019GT	367, 373
1276021GT	367, 373
1276386GT	361
1276396GT	373, 449
1276412GT	81
1276413GT	377
1276424GT	361
1276425GT	363
1276426GT	361
1276427GT	381, 389
1276428GT	361
1276432GT	395
1276437GT	379
1276444GT	365
1276445GT	365
1276449GT	395
1276450GT	395
1276451GT	397
1276453GT	369
1276459GT	83
1276464GT	365
1276468GT	369
1276482GT	369
1276484GT	385
1276485GT	419
1276490GT	367
1276491GT	369
1276504GT	361
1276505GT	361
1276508GT	375
1276509GT	373
1276510GT	365
1276511GT	365
1276514GT	367
1276519GT	83
1276520GT	395
1276521GT	395
1276672GT	459
1276750GT	245
1276820GT	383
1276822GT	385
1276986GT	459
1277169GT	103
1277205GT	465
1277206GT	465
1277207GT	463
1277776GT	365
1277873	479
1277904GT	163
1277905GT	163
1277906GT	205
1277907GT	205
1277924	479
1277924GT	81, 87, 95, 105, 113, 117...
1277952GT	431
1277966GT	431
1277968GT	269

Part no.	Page Number
1277969GT	269
1277974GT	297, 317
1278119	479
1278119GT	121, 205
1278124	479
1278368	479
1278542	479
1278542GT	31, 49
1278567GT	31, 49
1278612GT	407
1278613GT	407
1278629GT	441, 445
1278666GT	121, 195, 373
1278708GT	13
1278709GT	13
1278793GT	433
1278858GT	399
1278859GT	119, 135
1278912GT	111, 115
1278982	479
1278982GT	31, 49
1279049GT	381, 389
1279465GT	357
1279466GT	357
1279520GT	89
1279521GT	89
1279522GT	89
1279564GT	27
1279599GT	145
1279631GT	299
1279653GT	297
1279801GT	453
1279851GT	407
1279869GT	467
1279902GT	119, 143
1280080GT	453
1280278	479
1280390GT	105
1280401GT	89
1280589GT	101
1280592GT	139
1280819GT	21
1280820GT	21
1280837GT	395
1280838GT	395, 505
1280839GT	395
1280840GT	397
1280841GT	365
1280844GT	121
1280862GT	359
1281149GT	487
1281169GT	21, 35
1281174GT	31, 49
1281175GT	49
1281180GT	21
1281187GT	21, 35
1281188GT	21, 35
1281786GT	459
1281789GT	257
1281808GT	85
1281936GT	361
1281963GT	377
1281974GT	111
1282117GT	15, 17, 85
1282118GT	303
1282119GT	309
1282175GT	249
1282197GT	83
1282472GT	405
1282963GT	461
1282993GT	437
1283004GT	65, 287, 487, 497, 501
1283005GT	365, 375, 429, 459
1283007GT	293, 331
1283012GT	101
1283013GT	113
1283015GT	327
1283019GT	509
1283021GT	337
1283022GT	65, 337
1283024GT	85, 383, 389
1283026GT	499, 503
1283028GT	385, 387, 389, 439, 443
1283103GT	85
1283125GT	345
1283145GT	357
1283168GT	349
1283181GT	347
1283182GT	351
1283279GT	351
1283307GT	383
1283339GT	119, 145
1283340GT	119, 149
1283345GT	21, 27, 35, 43
1283511GT	55
1283513GT	461
1283516GT	397
1283533GT	59
1283537GT	65
1283538GT	369
1283547GT	81
1283548GT	461
1283549GT	471
1283555GT	123, 221
1283560GT	21, 35
1283561GT	21, 35
1283562GT	447
1283563GT	23, 39
1283571GT	271
1283572GT	271
1283573GT	271
1283574GT	271
1283575GT	271
1283576GT	419
1283577GT	27, 43, 505
1283744GT	29, 45
1283776GT	13
1283783GT	59, 69
1283785GT	55, 67
1283843GT	461
1283847GT	55
1283878GT	21, 31, 37, 49
1283880GT	445
1284023GT	249
1284093GT	377
1284096GT	23, 39

Part no.	Page Number
1284097GT	23, 39
1284098GT	49
1284099GT	49
1284100GT	29, 45
1284101GT	23, 39
1284102GT	29, 45
1284103GT	49
1284272GT	455
1284399GT	257
1284523GT	101
1284524GT	407
1284548GT	347
1284549GT	347
1284573GT	385
1284672GT	31
1284717GT	31
1284718GT	31
1284724GT	225
1284956GT	149
1284964GT	149
1284966GT	149
1284969GT	149
1284981GT	21
1284982GT	37
1285141GT	257
1285142GT	257
1285143GT	257
1285144GT	257
1285145GT	257
1285146GT	257
1285147GT	257
1285150GT	459
1285151GT	459
1285152GT	459
1285153GT	459
1285222GT	353
1285224GT	353
1285508GT	459, 505
1285719GT	493
1285721GT	493
1285730GT	493
1286171GT	383
1286190GT	239
1286259GT	493
1286260GT	493
1286261GT	493
1286262GT	493
1286263GT	493
1286362GT	37, 43
1286372GT	57, 63
1286393GT	493
1286395GT	89
1286459GT	505
1286546GT	351
1286577GT	23, 39
1286578GT	29, 45
1286579GT	29, 45
1286594GT	89
1286618GT	493
1286620GT	493
1286621GT	493
1286640GT	101
1287081GT	467
1287116GT	349
1287139GT	351
1287140GT	351
1287242GT	71
1287489GT	23, 39
1287490GT	453
1287506GT	55
1287507GT	427
1287508GT	449
1287509GT	449
1287510GT	449
1287511GT	449
1287515GT	23, 39
1287517GT	37
1287590GT	25, 39
1287591GT	29, 45
1287592GT	25, 39
1287593GT	29, 45
1287594GT	25, 39
1287598GT	21, 37
1287599GT	21, 37
1287630GT	123, 225
1287631GT	121, 187
1288327GT	27
1288367GT	447
1288372GT	65
1288373GT	65
1288377GT	239, 241
1288379GT	241
1288380GT	241
1288381GT	239
1288382GT	243
1288383GT	241
1288398GT	65
1288402GT	453
1288403GT	57, 63
1288405GT	57, 63
1288407GT	25
1288408GT	25, 41
1288455GT	463
1288456GT	505
1288795GT	101
1288801GT	493
1288803GT	493
1288805GT	493
1288890-9450GT	413, 415
1288890-9948GT	427
1288891-7874GT	469
1288891-8268GT	417
1288984GT	89
1289103GT	295
1289514GT	25, 39
1289520GT	81, 487
1289521GT	81, 487
1289522GT	487
1289523GT	487
1289535GT	481
1289536GT	481
1289552GT	401
1289561GT	81, 487
1289592GT	129
1289609GT	481
1289610GT	481

Part no.	Page Number
1289611GT	481
1289692GT	493
1289693GT	493
1289767GT	481
1289823GT	483
1289837GT	483
1289851GT	481
1289852GT	483
1289895GT	297
1290025GT	41
1290026GT	41
1290107GT	481
1290424GT	465
1290450GT	99
1290459GT	99
1290460GT	99
1290501GT	119, 129
1290553GT	239, 241
1290806GT	37
1290807GT	37
1290808GT	37
1290849GT	481
1291159GT	453
1291202GT	95
1291205GT	349
1291342GT	97
1291410GT	121, 211
1291411GT	121
1291495GT	431
1291496GT	431
1291573GT	481
1291624GT	21, 37
1291798GT	497
1291799GT	497
1291800GT	497
1291801GT	499
1291802GT	497, 501
1291803GT	499, 503
1291804GT	499, 501
1291806GT	499, 503
1291807GT	499
1291809GT	499, 503
1291811GT	497, 501
1291812GT	497, 501
1291813GT	499, 503
1291815GT	497, 501
1291817GT	497, 501
1291818GT	499, 503
1291819GT	499, 501
1291821GT	499, 503
1291844GT	499, 501
1291865GT	497, 501
1292198GT	487
1292346GT	487
1292512GT	21, 37
1292513GT	21, 37
1292514GT	21, 37
1292515GT	21, 37
1292828GT	499, 503
1292932GT	497, 501
1292936GT	497
1292937GT	497
1292937PGT	497
1292956GT	497
1293596GT	25, 41
1293597GT	45
1293598GT	45
1293599GT	25, 41
1293600GT	45
1293601GT	25, 41
1293602GT	25, 41
1293606GT	25, 41
1293607GT	45
1293608GT	45
1293609GT	25, 41
1293614GT	31
1293615GT	31
1293616GT	49
1293617GT	49
1293618GT	33
1293700GT	501
1293702GT	501
1293703GT	501
1293704GT	503
1293706GT	499, 501
1293710GT	501
1293786GT	119
1294289GT	487
1294340GT	49
1294398GT	27, 43
1294541GT	119, 155
1294547GT	119, 139
1294573GT	119, 173
1294827GT	283
1295161GT	45
1295162GT	45
1295163GT	29, 45
1295164GT	29, 45
1295271GT	49
1295314GT	45
1295315GT	45
1295316GT	45
1295317GT	45
1295318GT	29, 45
1295319GT	29, 47
1295320GT	29, 45
1295321GT	29, 47
1295322GT	29
1295323GT	29
1295324GT	29
1295325GT	29
1295326GT	29
1295327GT	29
1295328GT	29
1295329GT	29
1295330GT	29
1295331GT	29
1295332GT	29
1295333GT	29
1295334GT	261, 283
1295745GT	45
1296591GT	461
1296802GT	239, 241
1296803GT	241
1296804GT	241
1296816GT	395

Part no.	Page Number
1296817GT	395
1296895GT	509
1296897GT	509
1296971GT	451
1297346GT	349
1297451GT	413, 415
1298933GT	13
1299532GT	81
1299668GT	25, 41
1299669GT	49
1300536GT	271
1300832GT	509
1301030GT	37
1301075GT	43
1301743GT	75, 77
1302966GT	101
1303389GT	251
1303390GT	255
1303426GT	403
1303581GT	81
1303585GT	495
1303889GT	75, 77
1304217GT	43
1304649GT	111
1305366GT	421
1305586GT	239
1305837GT	119, 169
1305983GT	301
1306210GT	405
1306211GT	121
1306212GT	119, 157
1306377GT	385
1306378GT	389
1306379GT	387, 389
1306380GT	385, 389
1306381GT	385, 391
1306382GT	385, 391
1306383GT	385, 391
1306384GT	385
1306385GT	391
1306386GT	385, 391
1306387GT	385, 391
1306388GT	385, 391
1306389GT	385, 391
1306608GT	119, 163
1306812GT	121, 183
1306899	479
1306900	479
1307644	479
1307645	479
1307726GT	381, 389
1307739	479
1308313GT	365
1308384	479
1308384GT	121, 207
1309207GT	119
1309496GT	363
1309567GT	83
1310064	479
1310066	479
1310252GT	133
1310265GT	369
1310378GT	467
1310379GT	447
1310738GT	387, 391
1310739GT	391
1310742GT	119, 153
1310898GT	507
1310910-975GT	507
1310911-950GT	507
1311043GT	447
1311053GT	467, 505
1311092GT	79
1311093GT	79
1311146GT	77
1311457GT	381, 389
1311634GT	123, 233
1311698GT	119, 175
1311887GT	119
1312118GT	243
1312271GT	463
1312376GT	25
1312379GT	25, 41
1312383GT	33
1312385GT	33
1312387GT	37
1312388GT	21, 37
1312389GT	49
1312547GT	465
1312876GT	235
1312877GT	235
1313038GT	267
1313039GT	267
1313040GT	267
1313118GT	507
1313196GT	119, 125
1313470GT	301
1313592GT	81, 487
1313693GT	71
1313694GT	71
1313695GT	71
1313696GT	71
1313697GT	71
1313698GT	71
1313699GT	71
1313700GT	71
1313701GT	71
1313702GT	71
1313703GT	71
1313704GT	71
1313705GT	71
1313706GT	71
1313707GT	71
1313708GT	71
1313709GT	71
1313760GT	405
1313945GT	37
1313946GT	37
1314181GT	251, 255
1314182GT	251, 255
1314183GT	251, 255
1314493GT	245
1314525GT	119, 127
1314554GT	251, 255
1314555GT	251, 255
1314556GT	251, 255

Part no.	Page Number
1316635GT	93
1316867GT	85
1316958GT	85
1319559GT	121, 195, 373
1320570GT	447
1321007GT	79
1321008GT	79
1321009GT	79
1321010GT	79
1321045GT	79
1321046GT	79
1321048GT	79
1321049GT	79
1321050GT	79
1321051GT	79
1321052GT	79
1321053GT	79
1321054GT	79
1321055GT	79
1321056GT	79
1321057GT	79
1321058GT	79
1321059GT	79
1321090GT	75, 77
1321096GT	373
1321097GT	375
1321122GT	79
1321340GT	75
1321341GT	75
1321342GT	77
1321343GT	77
1323139GT	373
1323412GT	39
1323443GT	305
1323444GT	325
1323451GT	23
1323454GT	25, 39
1323455GT	23, 39
1323761GT	407
1326333GT	305
1327902GT	65
T106954GT	105
T106955GT	105
T106957GT	105
T106961GT	105
T106962GT	105
T110954GT	233
T110955GT	233
T112536GT	233
T112537GT	233
T112560GT	447
T112561GT	447
T112626GT	411
T112773GT	31, 49

Part no.	Page Number

California Proposition 65

WARNING

Operating, servicing and maintaining this equipment, passenger vehicle or off-highway motor vehicle can expose you to chemicals including engine exhaust, carbon monoxide, phthalates, and lead, which are known to the State of California to cause cancer and birth defects or other reproductive harm. These chemicals can be emitted from or contained in other various parts and systems, fluids and some component wear by-products. To minimize exposure, avoid breathing exhaust, do not idle the engine except as necessary, service your equipment and vehicle in a well-ventilated area and wear gloves or wash your hands frequently when servicing your equipment or vehicle and after operation. For more information go to www.P65Warnings.ca.gov/passenger-vehicle.

Breathing diesel engine exhaust exposes you to chemicals known to the State of California to cause cancer and birth defects or other reproductive harm.

- Always start and operate the engine in a well-ventilated area.
- If in an enclosed area, vent the exhaust to the outside.
- Do not modify or tamper with the exhaust system.
- Do not idle the engine except as necessary.

For more information go to www.P65warnings.ca.gov/diesel.

Distributed By: